IXYS WESTCODE МОДУЛЬ IGBT, ТИРИСТОРНЫЙ, ДИОДНЫЙ, ДИОД ТИРИСТОР МОСТ ВЫПРЯМИТЕЛЬНЫЙ ТРАНЗИСТОР ОХЛАДИТЕЛЬ РАДИАТОР

г.Мінск тел./ф 8(017)2005646 email: minsk17@tut.by www.fotorele.net www.igbt.by НЕ работаем с физическими (частными) лицами

micronix

MX 834 2
➤ MX 840A 11
➤ MX 840B 11
➤ MX 841 6
➤ MX 844 12
➤ MX 856 16
➤ MX 857 16
➤ MX 860 3
➤ MX 865 7
➤ MX 877 13
➤ MX 878 14
➤ MX 879 15
➤ MX 881 8
➤ MX 887D 10
➤ MX 887P 10
➤ MXEI 1480 4
➤ MXEI 2240 5
➤ MXHV 9910 9

IXYS RF

D
DE 150-101N09A 19
DE 150-102N02A 19
DE 150-201N09A 19
DE 150-501N04A 19
DE 275-101N30A 19
DE 275-102N06A 19
DE 275-201N25A 19
DE 275-501N16A 19
DE 275X2-102N06A 19
DE 275X2-501N16A 19
DE 375-102N10A 19
DE 375-102N12A 19
DE 375-501N21A 19
DE 475-102N20A 19
DE 475-102N21A 19
DE 475-501N44A 19
DEIC 420 18
➤ DEIC 421 18
➤ DEIC 515 18
GS 08DI25104 18
GS 150TA_25104 18
GS 150TA_25110 18
GS 150TC_25104 18
GS 150TC_25110 18
GS 150TC_25120 18
GS 150TI_25104 18
GS 150TI_25110 18

I
IXDD 415SI 18
IXFH 6N100F 19
IXFH 12N50F 19
IXFH 12N100F 19
IXFH 21N50F 19
IXFH 28N50F 19
IXFH 60N20F 19
IXFK 21N100F 19
IXFK 24N100F 19
IXFK 44N50F 19
IXFK 55N50F 19
IXFN 24N100F 19
IXFN 55N50F 19
IXFR 12N100F 19
IXFT 6N100F 19
IXFT 12N50F 19
IXFT 12N100F 19
IXFT 21N50F 19
IXFT 28N50F 19
IXFT 60N20F 19
IXFX 21N100F 19
IXFX 24N100F 19
IXFX 44N50F 19
IXFX 55N50F 19
IXLD 02SI 18
➤ IXZ 12210N50L-754 17
IXZ 210N50L 17
➤ IXZ 211N50 17
IXZ 215N12L 17
IXZ 2210N50L 17
➤ IXZ 2211N50 17
IXZ 308N120 17
IXZ 316N60 17
IXZ 318N50 17
➤ IXZH 08N120 17
IXZH 10N50LA 17
IXZH 10N50LB 17
➤ IXZH 16N60 17
➤ IXZH 18N50 17
➤ IXZR 08N120 17
IXZR 08N120A 17
IXZR 08N120B 17
➤ IXZR 16N60 17
IXZR 16N60A 17
IXZR 16N60B 17
➤ IXZR 18N50 17
IXZR 18N50A 17
IXZR 18N50B 17

MwT MicroWave Technology

A
AL 26501 21
AL 618801 21
AN 12201N 21
AN 1415301N 21
AN 1718401N 21
AN 23201N 21
AN 45201N 21
AN 78201N 21
AN 910201N 21
AP 1011401 21
AP 1415401 21
AP 1718501 21
AP 1819801 21
AP 45401 21
AP 67402 21
AP 78401 21
AP 910401 21
AT 26301 21
AT 26401 21
AT 618401 21
AT 618501 21
AW 052202N 21
AW 052203 21
AW 054201N 21
AW 054203 21
AW 1218301N 21
AW 1218504 21
AW 12201N 21
AW 12203 21
AW 218201N 21
AW 218301 21
AW 218301N 21
AW 26201N 21
AW 26204 21
AW 28201N 21
AW 28302 21
AW 612301N 21
AW 612304 21
AW 618301N 21
AW 618302 21
AW 618404 21
AW 818301N 21
AW 818504 21

M
MPS 003001-XX 25
MPS 013001-XX 25
MPS 080817N-XX 24
MPS 080817P-XX 24
MPS 0808A9-XX 24
MPS 080917N-XX 24
MPS 080917P-XX 24
MPS 0809A9-XX 24
MPS 0810A9D-XX 24
MPS 082508-XX 25
MPS 082509-XX 25
MPS 090917N-XX 24
MPS 090917P-XX 24
MPS 0909A9-XX 24
MPS 093011-XX 24
MPS 1718A9-XX 24
MPS 172208-XX 24
MPS 173011-XX 24
MPS 1820A9D-XX 24
MPS 1820A9-XX 24
➤ MPS 182217-XX 24
MPS 2125A9D-XX 24
MPS 213011-XX 24
MPS 242520-XX 24
MPS 252730-XX 24
MPS 253011-XX 24
MPS 302201-XX 25
MPS 343517-XX 24
MPS 3435A9D-XX 24
➤ MPS-032701A-82 25
➤ MPS-0425A9D-82 25
➤ MPS-081017-02 24
➤ MPS-081017N-02 24
➤ MPS-081017P-02 24
➤ MPS-0810A9-02 24
➤ MPS-0820A9D-02 24
➤ MPS-1720A9-02 24
➤ MPS-182117-02 24
➤ MPS-242717-02 24
➤ MPS-343617-82 24
MPS-343617-XX 25
➤ MPS-343717-02 24
➤ MPS-343717-82 24
MPS-343717-XX 25
➤ MPS-363817-82 24
MPS-363817-XX 25
MwT 0206-11P2 20
MwT 0206-1G1 20
MwT 0206-1G2 20
MwT 0206-2P2 20
MwT 0206-7G2 20
MwT 0206-9P2 20
➤ MwT 0206-A9G1 20
MwT 0206-TCM 20
MwT 0206-VRM 20
MwT 0218-4N1 20
MwT 0218-4N2 20
MwT 0218-H4N1 20
➤ MwT 0218-H4N2 20
MwT 0618-12P2 20
MwT 0618-2P1 20
MwT 0618-2P2 20
MwT 0618-3P1 20
MwT 0618-3P2 20
MwT 0618-4N1 20
MwT 0618-4N2 20
MwT 0618-5G1 20
MwT 0618-5G2 20
MwT 0618-7G2 20
➤ MwT 0618-H15P2 20
➤ MwT 0618-H15P3 20
➤ MwT 0618-H16P3 20
MwT 0618-H4N2 20
➤ MwT 0618-H7P2 20
MwT 0618-TCM 20
MwT 0618-VRM 20
MwT 0820-3P1 20
MwT 0820-3P2 20
MwT 0820-4N1 20
MwT 0820-4N2 20
MwT 0820-5G1 20
MwT-1 22, 23
➤ MwT-11 22, 23
MwT-15 22, 23
MwT-16 22, 23
MwT-17 22, 23
➤ MwT-1789HL 22, 23
➤ MwT-1789LN 22, 23
➤ MwT-17QFN 22, 23
MwT-2 22, 23
➤ MwT-22 22, 23
➤ MwT-22QFN 22, 23
➤ MwT-24 22, 23
➤ MwT-25 22, 23
MwT-3 22, 23
MwT-4 22, 23
MwT-5 22, 23
MwT-6 22, 23
MwT-7 22, 23
➤ MwT-8 22, 23
MwT-9 22, 23
MwT-A9 22, 23
➤ MwT-A989SB 22, 23
➤ MwT-H7 22, 23
➤ MwT-LP7 22, 23
➤ MwT-PH15 22, 23
➤ MwT-PH16 22, 23
➤ MwT-PH7 22, 23
➤ MwT-PH8 22, 23

U
➤ ULA 808-XX 24
➤ ULA 818-XX 24

W
WPS-252717-XX 25
WPS-252724-XX 25
WPS-343722-XX 25
WPS-343724-XX 25
WPS-495917-XX 25
WPS-495922-XX 25

CLARE

C
CPC 1002N 27
CPC 1004N 27
CPC 1008N 26
CPC 1016N 26
CPC 1017N 26
CPC 1018N 26
CPC 1025N 26
CPC 1030N 26
CPC 1035N 26
CPC 1117N 29
CPC 1130N 29
CPC 1135N 29
CPC 1150N 29
CPC 1218Y 27
CPC 1230N 26
CPC 1231N 29
CPC 1330 26
CPC 1335P 26
CPC 1390 26
CPC 1393 26
CPC 1465D 39
CPC 1465M 39
CPC 1510 26
CPC 1580 51
CPC 1590 51
➤ CPC 1708J 33
➤ CPC 1709J 33
CPC 1777J 33
CPC 1786J 33
CPC 1822 52
CPC 1824 52
CPC 1831 52
CPC 1832 52
CPC 1840 52
CPC 1841 52
CPC 1906Y 32
CPC 1908J 32
CPC 1909J 32
CPC 1916Y 32
CPC 1918J 32
CPC 1926Y 32
CPC 1943G 31
CPC 1945G 31
CPC 1945Y 31
CPC 1961G 31
CPC 1962G 31
CPC 1963G 31
CPC 1965G 31
CPC 1965Y 31
CPC 1967J 32
CPC 1972G 31
CPC 1973Y 32
CPC 1976Y 31
CPC 1977J 32
CPC 1978J 32
CPC 1979J 32
CPC 1981Y 32
CPC 1986J 32
CPC 1988J 32
CPC 3703 45
CPC 3710 45
CPC 3714 45
CPC 3720 45
CPC 3730 45
CPC 5602 45
CPC 5603 45
CPC 5604 42
CPC 5610 42
CPC 5611 42
CPC 5620 42
CPC 5621 42
CPC 5622 42
CPC 5710 44
➤ CPC 6530 50
➤ CPC 6826 50
➤ CPC 7220 50
➤ CPC 7221 50
CPC 7581xA 40
CPC 7581xB 40
CPC 7581xC 40
CPC 7582xA 40
CPC 7582xB 40
CPC 7582xC 40
CPC 7583xA 40
CPC 7583xB 40
CPC 7583xC 40
CPC 7583xD 40
CPC 7591Mx 41
CPC 7591xA 40
CPC 7591xB 40
CPC 7592Mx 41
CPC 7592xA 40
CPC 7592xB 40
CPC 7592xC 40
CPC 7593Mx 41
CPC 7593xA 40
CPC 7593xB 40
CPC 7593xC 40
CPC 7593xD 40
CPC 7594Mx 41
CPC 7594xA 40
CPC 7594xB 40
CPC 7594xC 40
CYG 2000 46
CYG 2001 46
CYG 2010 46
CYG 2011 46
CYG 2020 46
CYG 2021 46
CYG 2030 46
CYG 2031 46
CYG 2100 46
CYG 2110 46
CYG 2111 46
CYG 2120 46
CYG 2217 46
CYG 2218 46
CYG 2300 46
CYG 2320 46
CYG 2911 46

F
FDA 215 51

I
IAA 110P 37
IAA 170P 37
IAB 110P 37

IAD 110P 37
IAD 170P 37
IBB 110P 37
ITC 117P 38
ITC 117PL 38
ITC 135P 38
ITC 137P 38

L

LAA 100 28
LAA 100L 28
LAA 110 28
LAA 110L 28
LAA 120 28
LAA 120L 28
LAA 125 28
LAA 125L 28
LAA 126 28
LAA 126L 28
LAA 127 28
LAA 127L 28
LAA 710 28
LBA 110 30
LBA 110L 30
LBA 120 30
LBA 120L 30
LBA 126 30
LBA 126L 30
LBA 127 30
LBA 127L 30
LBB 110 29
LBB 120 29
LBB 126 29
LBB 127 29
LCA 100 26
LCA 100L 26
LCA 110 26
LCA 110L 26
LCA 120 26
LCA 120L 26
LCA 125 26
LCA 125L 26
LCA 126 26
LCA 127 26
LCA 127L 26
LCA 129 26
LCA 182 26
LCA 210 28
LCA 210L 28
LCA 211 28
LCA 220 28
LCA 710 26
LCA 712 26
LCA 715 26
LCB 110 29
LCB 111 29
LCB 120 29
LCB 126 29
LCB 127 29
LCC 110 30
LCC 120 30
LDA 100 36
LDA 101 36
LDA 110 36
LDA 111 36
LDA 200 36
LDA 201 36
LDA 202 36
LDA 203 36
LDA 210 36
LDA 211 36
LDA 212 36
LDA 213 36
LIA 100 34
LIA 101 34
LIA 120 35
LIA 130 35
LOC 110 34
LOC 111 34
LOC 112 34
LOC 210P 34
LOC 211P 34

M

M-980-02 48
M-982-02 48
M-984-02 48
M-985-01 48
M-986-2A1P 49
M-986-2R2P 49
M-991 48
M-993 49

O

OAA 160 28
OMA160 27

P

PAA 110 28
PAA 110L 28
PAA 132 28
PAA 140 28
PAA 140L 28
PAA 150 28
PAA 190 28
PAA 191 28
PAA 193 28
PBA 150 30
PBB 150 29
PD 1201 31
PD 2401 31
PD 2601 31
PLA 110 27
PLA 110L 27
PLA 132 27
PLA 134 27
PLA 140 27
PLA 140L 27
PLA 143 27
PLA 150 27
PLA 160 27
PLA 170 27
PLA 190 27
PLA 191 27
PLA 192 27
PLA 193 27
PLB 150 29
PM 1204 31
PM 1205 31
PM 1206 31
PS 1201 31
PS 2401 31
PS 2601 31

T

TS 112N 37
TS 117 37
TS 117L 37
TS 118 37
TS 120 37
TS 120L 37
TS 122 37
TS 190 37
TS 190L 37

X

XAA 170 28
XBA 170 30
XBB 170 29
XCA 170 27
XS 170 37

IXYS

C

➤ CLA 50E1200HB 110
➤ CLA 50E1200TC 110
CS 8-08io2 110
CS 8-12io2 110
CS 19-08ho1 110
CS 19-08ho1C 110
CS 19-08ho1S 110
CS 19-12ho1 110
CS 19-12ho1C 55, 110
CS 19-12ho1S 110
CS 20-12io1 110
CS 20-14io1 110
CS 20-16io1 110
CS 20-22moF1 59, 110
CS 22-08io1M 110
CS 22-12io1M 110
CS 23-08io2 110
CS 23-12io2 110
CS 23-16io2 110
CS 29-08io1C 110
CS 29-12io1C 55, 110
CS 30-12io1 110
CS 30-14io1 110
CS 30-16io1 110
CS 35-08io4 110
CS 35-12io4 110
CS 35-14io4 110
CS 45-08io1 110
CS 45-12io1 110
CS 45-16io1 110
CS 45-16io1R 56, 110
CS 60-12io1 110
CS 60-14io1 110
CS 60-16io1 110

D

DCB Substrate 150
DGS 3-018AS 97
DGS 3-025AS 97
DGS 3-030AS 97
DGS 4-025A 97
DGS 9-025AS 97
DGS 9-030AS 97
DGS 10-018A 97
DGS 10-018AS 97
DGS 10-025A 97
DGS 10-025AS 97
DGS 10-030A 97
DGS 13-025CS 97
DGS 15-018CS 97
DGS 17-03CS 97
DGS 19-025AS 97
DGS 19-025CS 97
DGS 20-018A 97
DGS 20-018AS 97
DGS 20-025A 97
DGS 20-025AS 97
DGSK 8-025A 97
DGSK 20-018A 97
DGSK 20-025A 97
DGSK 20-025AS 97
DGSK 28-025CS 97
DGSK 32-018CS 97
DGSK 36-03CS 97
DGSK 40-018A 97
DGSK 40-025A 97
DGSK 40-025AS 97
DGSK 40-025CS 97
➤ DGSS 6-06CC 55, 97
DGSS 10-06CC 55, 97
➤ DGSS 20-06CC 55, 97
➤ DH 20-18A 102
DH 2x61-18A 102
➤ DH 40-18A 102
DH 60-18A 102
➤ DHF 30IM600PN 102
➤ DHF 30IM600QB 102
➤ DHG 10I600PA 102
➤ DHG 10I600PM 102
➤ DHG 20C600QB 102
➤ DHG 30I1200HA 102
➤ DHG 30I600HA 102
➤ DHG 30I600PA 102
➤ DHG 60C600HB 102
➤ DHH 55-36N1F 59, 102
➤ DPG 10I200PA 104
➤ DPG 10I200PM 104
➤ DPG 10I300PA 104
➤ DPG 10I400PA 104
➤ DPG 10I400PM 104
➤ DPG 15I200PA 104
➤ DPG 15I300PA 104
➤ DPG 20C200PB 104
➤ DPG 20C200PN 104
➤ DPG 20C300PB 104
➤ DPG 20C300PN 104
➤ DPG 20C400PB 104
➤ DPG 30C200HB 104
➤ DPG 30C200PB 104
➤ DPG 30C300HB 104
➤ DPG 30C300PB 104
➤ DPG 30C300PC 104
➤ DPG 30C400HB 104
➤ DPG 60C200QB 104
➤ DPG 60C300HB 104
➤ DPG 60C300QB 104
➤ DPG 60C400QB 104
➤ DPG 60I400HA 104
➤ DPG 60IM300PC 104
➤ DPG 60IM400QB 104
➤ DPG 120C300QB 104
DS 1-12D 107
DS 2-08A 107
DS 2-12A 107
DS 9-08F 107
DS 9-12F 107
DS 17-08A 107
DS 17-12A 107
DS 35-08A 108
DS 35-12A 108
DS 75-08B 108
DS 75-12B 108
DSA 1-12D 107
DSA 1-16D 107
DSA 1-18D 107
➤ DSA 1I100SA 100
DSA 2-12A 107
DSA 2-16A 107
DSA 2-18A 107
➤ DSA 2I100SB 100
DSA 9-12F 107
DSA 9-16F 107
DSA 9-18F 107
➤ DSA 15I45PA 100
➤ DSA 15IM45IB 100
DSA 17-12A 107
DSA 17-16A 107
DSA 17-18A 107
➤ DSA 20C100PB 100
➤ DSA 20C100PN 100
➤ DSA 20C150PB 100
➤ DSA 20C150PN 100
➤ DSA 20C45PB 100
➤ DSA 20C60PN 100
➤ DSA 30C100PB 100
➤ DSA 30C100PN 100
➤ DSA 30C100QB 100
➤ DSA 30C150PB 100
➤ DSA 30C45HB 100
➤ DSA 30C45PB 100
➤ DSA 30C60PB 100
DSA 35-12A 108
DSA 35-16A 108
DSA 35-18A 108
➤ DSA 50C100HB 100
➤ DSA 50C100QB 100
➤ DSA 50C150HB 100
➤ DSA 60C100PB 100
➤ DSA 60C45HB 100
➤ DSA 60C45PB 100
➤ DSA 60C60HB 100
➤ DSA 60C60PB 100
➤ DSA 70C100HB 100
➤ DSA 70C150HB 100
DSA 75-12B 108
DSA 75-16B 108
DSA 75-18B 108
➤ DSA 80C100PB 100
➤ DSA 80C45HB 100
➤ DSA 90C200HB 100
➤ DSA 120C150QB 100
DSAI 17-12A 107
DSAI 17-16A 107
DSAI 17-18A 107
DSAI 35-12A 108
DSAI 35-16A 108
DSAI 35-18A 108
DSAI 75-12B 108
DSAI 75-16B 108
DSAI 75-18B 108
➤ DSB 1I40SA 100
➤ DSB 1I60SA 100
➤ DSB 2I40SB 100
➤ DSB 2I60SB 100
➤ DSB 10I45PM 100
➤ DSB 15IM45IB 100
➤ DSB 20C60PN 100
➤ DSB 20I15PA 100
➤ DSB 30C30PB 100
➤ DSB 30C45HB 100
➤ DSB 30C45PB 100
➤ DSB 30C60PB 100
➤ DSB 40C15PB 100
➤ DSB 60C30HB 100
➤ DSB 60C45HB 100
➤ DSB 60C45PB 100
➤ DSB 60C60HB 100
➤ DSB 60C60PB 100
➤ DSB 80C45HB 100
DSEA 16-06AC 55, 101
DSEA 16-06BC 55, 101
DSEA 29-06AC 55, 101
DSEA 59-06BC 55, 101
DSEC 16-02A 103
DSEC 16-04AS 103
DSEC 16-06A 103
DSEC 16-06AC 55, 103
DSEC 16-06BC 55, 103
DSEC 16-12A 103
DSEC 29-02A 103
DSEC 29-02AS 103
DSEC 29-06AC 55, 103
DSEC 30-02A 103
DSEC 30-03A 103
DSEC 30-04A 103
DSEC 30-06A 103
DSEC 30-06B 103
DSEC 30-12A 103
DSEC 59-03AQ 103
DSEC 59-06BC 55, 103
DSEC 60-02A 103
DSEC 60-02AQ 103
DSEC 60-03A 103
DSEC 60-03AR 56, 103
DSEC 60-04A 103
DSEC 60-06A 103
DSEC 60-06B 103
DSEC 60-12A 103
DSEC 120-12AK 103
DSEC 240-04A 103
DSEC 240-06A 103
DSEE 6-06CC 55, 101
DSEE 8-06CC 55, 101
DSEE 8-08CC 55, 101
DSEE 15-06CC 55, 101
DSEE 15-12CC 55, 101
DSEE 29-06CC 55, 101
DSEE 29-12CC 55, 101
DSEE 30-12A 101
DSEE 55-24N1F 59, 101
DSEI 6-06AS 104
DSEI 8-06A 104
DSEI 8-06AS 104
DSEI 12-06A 104
DSEI 12-10A 104
DSEI 12-12A 104
DSEI 19-06AS 104
DSEI 20-12A 104
DSEI 2X 30-04C 105
DSEI 2X 30-06C 105
DSEI 2X 30-06P 105
DSEI 2X 30-10B 105
DSEI 2X 30-10P 105
DSEI 2X 30-12B 105
DSEI 2X 30-12P 105

DSEI 2X 31-04C 105
DSEI 2X 31-06C 105
DSEI 2X 31-06P 105
DSEI 2X 31-10B 105
DSEI 2X 31-10P 105
DSEI 2X 31-12B 105
DSEI 2X 31-12P 105
DSEI 2X 61-02A 105
DSEI 2X 61-02P 105
DSEI 2X 61-04C 105
DSEI 2X 61-06C 105
DSEI 2X 61-06P 105
DSEI 2X 61-10B 105
DSEI 2X 61-10P 105
DSEI 2X 61-12B 105
DSEI 2X 61-12P 105
DSEI 2X101-06A 105
DSEI 2X101-06P 105
DSEI 2X101-12A 105
DSEI 2X101-12P 105
DSEI 2X121-02A 105
DSEI 2X121-02P 105
DSEI 2X161-02P 105
DSEI 2X161-06P 105
DSEI 2X161-12P 105
DSEI 30-06A 104
DSEI 30-10A 104
DSEI 30-10AR 56, 104
DSEI 30-12A 104
DSEI 36-06AS 104
DSEI 60-02A 104
DSEI 60-06A 104
DSEI 60-06AT 104
DSEI 60-10A 104
DSEI 60-12A 104
DSEI 120-06A 104
DSEI 120-12A 104
DSEK 60-02A 104
DSEK 60-02AR 56, 104
DSEK 60-06A 104
DSEK 60-12A 104
DSEP 6-06AS 102
DSEP 8-02A 102
DSEP 8-03A 102
DSEP 8-03AS 102
DSEP 8-06A 102
DSEP 8-06B 102
DSEP 8-12A 103
DSEP 9-06CR 56, 101
DSEP 12-12A 103
➤ DSEP 12-12B 103
DSEP 15-03A 102
DSEP 15-06A 102
DSEP 15-06B 102
DSEP 15-12CR 56, 101
DSEP 29-03A 102
DSEP 29-06A 102
DSEP 29-06AS 102
DSEP 29-06B 102
DSEP 29-12A 103
DSEP 2x 25-12C 101
DSEP 2x 31-03A 103
DSEP 2x 31-04A 103
DSEP 2x 31-06A 103
DSEP 2x 31-06B 103
DSEP 2x 31-12A 103
DSEP 2x 35-06C 101
DSEP 2x 60-12A 103
DSEP 2x 61-03A 103
DSEP 2x 61-06A 103
DSEP 2x 61-12A 103
DSEP 2x 91-03A 103
DSEP 2x 91-06A 103
DSEP 2x101-04A 103
DSEP 30-03A 102
➤ DSEP 30-03AS 102
DSEP 30-04A 102
DSEP 30-06A 102
DSEP 30-06B 102
DSEP 30-06BR 56, 102
DSEP 30-06CR 56, 101
DSEP 30-12A 103
DSEP 30-12AR 56, 103
DSEP 30-12CR 56, 101
➤ DSEP 40-03AS 102
DSEP 60-03A 102
DSEP 60-04A 102
DSEP 60-06A 102
DSEP 60-06AT 102
DSEP 60-12A 103
DSEP 60-12AR 56, 103
DSI 17-08A 107
DSI 17-12A 107
DSI 2x55-12A 108
DSI 2x55-16A 108
DSI 30-08A 107
DSI 30-08AC 107
DSI 30-08AS 107
DSI 30-12A 107
DSI 30-12AC 107
DSI 30-12AS 107
DSI 30-16A 107
DSI 30-16AS 107
DSI 35-08A 108
DSI 35-12A 108
DSI 45-08A 108
DSI 45-12A 108
DSI 45-16A 108
DSI 45-16AR 56, 108
DSI 75-08B 108
DSI 75-12B 108
DSIK 45-16AR 56, 108
DSP 8-08A 107
DSP 8-08AS 107
DSP 8-08S 107
DSP 8-12A 107
DSP 8-12AC 55, 107
DSP 8-12AS 107
DSP 8-12S 107
DSP 25-12A 107
DSP 25-12AT 107
DSP 25-16A 107
DSP 25-16AR 56, 107
DSP 25-16AT 107
DSP 45-12A 107
DSP 45-16A 107
DSP 45-16AR 56, 107
DSS 6-0025BS 98
DSS 6-0045AS 98
DSS 6-015AS 99
DSS 10-0045A 98
DSS 10-0045B 98
DSS 10-006A 98
DSS 10-01A 99
DSS 10-01AS 99
DSS 16-0045A 98
DSS 16-0045AS 98
DSS 16-0045B 98
DSS 16-01A 99
DSS 16-01AS 99
DSS 17-06CR 56
DSS 17-06CR 101
DSS 20-0015B 98
DSS 20-01AC 99
DSS 25-0025B 98
DSS 25-0045A 98
DSS 2X 41-01A 99
DSS 2X 61-0045A 98
DSS 2X 61-01A 99
DSS 2X 81-0045B 98
DSS 2x101-015A 99
➤ DSS 2x101-02A 99
DSS 2X111-008A 99
DSS 2x121-0045B 98
DSS 2X160-0045A 98
DSS 2X160-01A 99
DSS 2X200-0008D 98
➤ DSS 40-0008D 98
DSS 60-0045B 98
DSSK 10-018A 99
DSSK 16-01A 99
DSSK 16-01AS 99
DSSK 18-0025B 98
DSSK 18-0025BS 98
DSSK 20-0045A 98
DSSK 20-0045AM 98
DSSK 20-0045B 98
DSSK 20-015A 99
DSSK 28-0045A 98
DSSK 28-0045B 98
DSSK 28-0045BS 98
DSSK 28-006B 98
DSSK 28-006BS 98
DSSK 28-01A 99
DSSK 28-01AS 99
DSSK 30-0045A 98
DSSK 30-0045B 98
DSSK 30-018A 99
DSSK 30-01A 99
DSSK 38-0025B 98
DSSK 38-0025BS 98
DSSK 40-0015B 98
DSSK 40-006B 98
DSSK 40-008B 99
DSSK 48-0025B 98
DSSK 48-003B 98
DSSK 48-003BS 98
DSSK 50-0025B 98
DSSK 50-015A 99
DSSK 50-01A 99
DSSK 60-0045A 98
DSSK 60-0045B 98
DSSK 60-015 AR 56, 99
DSSK 60-015A 99
➤ DSSK 60-02A 99
➤ DSSK 60-02AR 56, 99
DSSK 70-0015B 98
DSSK 70-003B 98
DSSK 70-008A 99
➤ DSSK 70-008AR 56, 99
DSSK 80-0008D 98
DSSK 80-0025B 98
DSSK 80-003B 98
DSSK 80-0045B 98
DSSK 80-006B 98
➤ DSSK 80-006BR 56, 98
➤ DSSS 30-01AR 56, 99
➤ DSSS 35-008AR 56, 99

E

EV6R 11S3 142
EV6R 11S7 142
EVBD 4400 142
EVDD 404 142
EVDD 414 142
EVDD 415 142
EVDD 430CI 142
EVDD 430MCI 142
EVDD 430MYI 142
EVDD 430YI 142
EVDI 402 142
EVDI 404 142
EVDI 409 142
EVDI 414 142
EVDI 430CI 142
EVDI 430MCI 142
EVDI 430MYI 142
EVDI 430YI 142
EVDN 402 142
EVDN 404 142
EVDN 409 142
EVDN 414 142
EVDN 430CI 142
EVDN 430MCI 142
EVDN 430MYI 142
EVDN 430YI 142
EVDS 430SI 142
EVIC 420A 142
EVIC 420B 142

F

FBE 22-06N1 59, 123
FBO 16-12N 59, 120, 124
FBO 40-12N 59, 120, 124
FBS 10-06SC 59, 97, 123
➤ FBS 10-12SC 59
FBS 16-06SC 59, 97, 123
FCC 21-12io 59, 11
FDM 21-05QC 58, 94
➤ FDM 25-06KC5 91, 94
➤ FDM 25-06KC5SiC 91, 94
➤ FDM 40-06KC5 91, 94
FDM 100-0045SP 58, 95
FID 35-06C 58, 69, 73, 120
FID 36-06D 58, 69, 73, 120
FID 60-06D 58, 69, 73, 120
FII 30-06D 58, 69, 73
FII 30-12E 58, 69, 73
FII 40-06D 58, 69, 73
FII 50-12E 58, 69, 73
FIO 50-12BD 58, 73, 121
FMD 21-05QC 58, 94, 120
➤ FMD 25-06KC5 91, 94, 120
➤ FMD 25-06KC5SiC 91, 94, 120
FMD 40-06KC 58, 91, 94, 120
➤ FMD 40-06KC5 91, 94, 120
FMD 80-0045PS 58
FMD 80-0045SP 95
FMK 75-01F 58, 94, 121
FMM 65-015P 58, 95
FMM 75-01F 58, 94
FMM 150-0075P 58, 95
FMM 200-0075P 95
FMM 300-0055P 58, 95
FSS 100-008A 59, 99
FUE 30-12N1 59, 123
FUO 22-12N 59, 129
FUO 22-16N 59, 129
FUO 50-16N 59, 129
FUS 45-0045B 59, 98

G

GBO 25-12NO1 124
GBO 25-16NO1 124
GDBD 4410 65
GWM 70-01P2 60, 95
➤ GWM 95-01X1 60, 95
➤ GWM 100-0085X1 60, 95
GWM 120-0075P3 60, 95
GWM 160-0055P3 60, 95
GWM 220-004P3 60, 95

H

HTZ 110A16K 128
HTZ 110A19K 128
HTZ 110A22K 128
HTZ 110A25K 128
HTZ 120A32K 128
HTZ 120A38K 128
HTZ 120A44K 128
HTZ 120A51K 128
HTZ 130B24K 128
HTZ 130B28K 128
HTZ 130B33K 128
HTZ 130B38K 128
HTZ 150C6K 128
HTZ 150C7K 128
HTZ 150C8K 128
HTZ 150C9K 128
HTZ 160C12K 128
HTZ 160C14K 128
HTZ 160C17K 128
HTZ 160C19K 128
HTZ 170C2.4K 128
HTZ 170C2.8K 128
HTZ 170C2K 128
HTZ 180D22K 128
HTZ 180D26K 128
HTZ 180D30K 128
HTZ 180D35K 128
HTZ 240F10K 128
HTZ 240F12K 128
HTZ 240F14K 128
HTZ 240F16K 128
HTZ 250G28K 128
HTZ 250G33K 128
HTZ 250G39K 128
HTZ 250G44K 128
HTZ 260G14K 128
HTZ 260G16K 128
HTZ 260G19K 128
HTZ 260G22K 128
HTZ 270H40K 128
HTZ 270H48K 128
HTZ 270H56K 128
HTZ 270H64K 128
HTZ 280H20K 128
HTZ 280H24K 128
HTZ 280H28K 128
HTZ 280H32K 128
HVL 900-12io1 135
HVL 900-14io1 135
HVL 900-16io1 135
HVL 900-18io1 135

I

➤ IX2A 11P1 140
➤ IX2A 11S1 140
➤ IX2B 11P7 140
➤ IX2B 11S7 140
➤ IX2C 11P1 140
➤ IX2C 11S1 140
➤ IX2D 11P7 140
➤ IX2D 11S7 140
IX2R 11P7 140
IX2R 11S3 140
IX4R 11P7 140
IX4R 11S3 140
IX6R 11P7 140
IX6R 11S3 140
IX6R 11S6 140
➤ IX6S 11S6 140
➤ IXA 531L4 140
➤ IXA 531S10 140
➤ IXA 611P7 140
➤ IXA 611S3 140
➤ IXB 611P1 140
➤ IXB 611S1 140
IXBD 4410PI 141
IXBD 4410SI 141
IXBD 4411PI 141
IXBD 4411SI 141
IXBF 9N160G 58, 80
IXBF 40N160 58, 80
IXBH 5N160G 80
IXBH 6N170 80
IXBH 9N160G 80
IXBH 10N170 80
IXBH 16N170 80
IXBH 16N170A 80
IXBH 40N160 80
IXBH 42N170 80
IXBOD 1 - 06 136
IXBOD 1 - 07 136
IXBOD 1 - 08 136
IXBOD 1 - 09 136
IXBOD 1 - 10 136
IXBOD 1 - 12R(D) 136
IXBOD 1 - 13R(D) 136
IXBOD 1 - 14R(D) 136
IXBOD 1 - 15R(D) 136
IXBOD 1 - 16R(D) 136
IXBOD 1 - 17R(D) 136
IXBOD 1 - 18R(D) 136
IXBOD 1 - 19R(D) 136
IXBOD 1 - 20R(D) 136
IXBOD 1 - 21R(D) 136
IXBOD 1 - 22R(D) 136
IXBOD 1 - 23R(D) 136
IXBOD 1 - 24R(D) 136
IXBOD 1 - 25R(D) 136
IXBOD 1 - 26R(D) 136
IXBOD 1 - 28R(D) 136
IXBOD 1 - 30R(D) 136
IXBOD 1 - 32R(D) 136
IXBOD 1 - 34R 136
IXBOD 1 - 36R 136
IXBOD 1 - 38R 136

IXBOD 1 - 40R 136
IXBOD 1 - 42R 136
IXBP 5N160G 80
IXBT 6N170 80
IXBT 10N170 80
IXBT 16N170 80
IXBT 16N170A 80
IXBT 42N170A 80
➤ IXC 611P1 140
➤ IXC 611S1 140
IXCP 02M45 143
IXCP 10M45 143
IXCP 10M45S 143
IXCP 10M90S 143
IXCP 20M45 143
IXCP 40M45 143
IXCP 50M45 143
IXCP 60M45 143
IXCY 02M45 143
IXCY 10M45 143
IXCY 10M45S 143
IXCY 10M90S 143
IXCY 20M45 143
IXCY 30M45 143
IXCY 50M45 143
IXCY 60M45 143
➤ IXD 611P1 140
➤ IXD 611P7 140
➤ IXD 611S1 140
➤ IXD 611S7 140
IXDA 20N120AS 73
IXDD 404 PI 137
IXDD 404 SI 137
IXDD 404 SI-16 137
IXDD 404SIA 137
IXDD 404SIA-16 137
IXDD 409CI 138
IXDD 409PI 138
IXDD 409SI 138
IXDD 409YI 138
IXDD 414 CI 138
IXDD 414 PI 138
IXDD 414SI 138
IXDD 414 YI 138
IXDD 430CI 138
IXDD 430MCI 138
IXDD 430MYI 138
IXDD 430YI 138
IXDF 402 PI 137
IXDF 402 SI 137
IXDF 402SI-16 137
IXDF 402SIA 137
IXDF 402SIA-16 137
IXDF 404 PI 137
IXDF 404 SI 137
IXDF 404 SI-16 137
IXDF 404SIA 137
IXDF 404SIA-16 137
IXDH 20N120 73
IXDH 20N120D1 73
IXDH 30N120 73
IXDH 30N120D1 73
IXDH 35N60B 73
IXDH 35N60BD1 73
IXDI 402 PI 137
IXDI 402 SI 137
IXDI 402SI-16 137
IXDI 402SIA 137
IXDI 402SIA-16 137
IXDI 404 PI 137
IXDI 404 SI 137
IXDI 404 SI-16 137
IXDI 404SIA 137
IXDI 404SIA-16 137
IXDI 409 CI 138
IXDI 409 PI 138
IXDI 409 SI 138
IXDI 409 YI 138
IXDI 414 CI 138
IXDI 414 PI 138
IXDI 414SI 138
IXDI 414 YI 138
IXDI 430CI 138
IXDI 430MCI 138
IXDI 430MYI 138
IXDI 430YI 138
IXDN 402 PI 137
IXDN 402 SI 137
IXDN 402SI-16 137
IXDN 402SIA 137
IXDN 402SIA-16 137
IXDN 404 PI 137
IXDN 404 SI 137
IXDN 404 SI-16 137
IXDN 404SIA 137
IXDN 404SIA-16 137
IXDN 409 CI 138
IXDN 409 PI 138
IXDN 409 SI 138
IXDN 409 YI 138
IXDN 414 CI 138
IXDN 414 PI 138
IXDN 414SI 138
IXDN 414 YI 138
IXDN 430CI 138
IXDN 430MCI 138
IXDN 430MYI 138
IXDN 430YI 138
IXDN 55N120D1 73
IXDN 75N120 73
IXDP 20N60B 73
IXDP 20N60BD1 73
IXDP 35N60B 73
IXDP 610PI 144
IXDP 630PI 144
IXDP 631PI 144
IXDR 30N120 73
IXDR 30N120D1 73
IXDR 35N60BD1 73
IXDS 430SI 138
➤ IXE 611P1 140
➤ IXE 611S1 140
IXEH 25N120 73
IXEH 25N120D1 73
IXEH 40N120 73
IXEH 40N120D1 73
➤ IXEL 40N400 56, 79
IXEN 60N120 73
IXEN 60N120D1 73
IXER 35N120D1 73
IXER 60N120 73
➤ IXF 611P1 140
➤ IXF 611S1 140
IXFA 3N120 88
IXFA 4N100Q 88
➤ IXFA 7N80P 87
➤ IXFA 10N60P 86
➤ IXFA 10N80P 87
➤ IXFA 12N50P 85
➤ IXFA 14N60P 86
➤ IXFA 16N50P 85
IXFB 38N100Q2 88
IXFB 50N80Q2 88
➤ IXFB 60N80P 87
IXFB 70N60Q2 88
IXFB 72N55Q2 88
IXFB 80N50Q2 88
➤ IXFB 82N60P 86
➤ IXFB 100N50P 86
➤ IXFC 10N80P 55, 87
➤ IXFC 12N80P 55, 87
➤ IXFC 14N60P 55, 86
➤ IXFC 14N80P 55, 87
➤ IXFC 16N50P 55, 85
➤ IXFC 16N80P 55, 87
➤ IXFC 20N80P 55, 87
➤ IXFC 22N60P 55, 86
➤ IXFC 26N50P 55, 85
➤ IXFC 30N60P 55, 86
➤ IXFC 36N50P 55, 85
➤ IXFC 52N30P 55, 85
➤ IXFC 74N20P 55, 84
➤ IXFC 96N15P 55, 84
➤ IXFC 110N10P 55, 84
IXFF 24N100 58
➤ IXFF 80N50Q2 88
IXFH 4N100Q 88
➤ IXFH 10N80P 87
➤ IXFH 12N80P 87
IXFH 14N100Q2 88
➤ IXFH 14N60P 86
➤ IXFH 14N80P 87
➤ IXFH 16N50P 85
➤ IXFH 16N80P 87
➤ IXFH 18N60P 86
➤ IXFH 20N80P 87
➤ IXFH 22N50P 85
➤ IXFH 22N60P 86
➤ IXFH 24N80P 87
➤ IXFH 26N50P 85
➤ IXFH 26N60P 86
➤ IXFH 30N50P 85
➤ IXFH 30N60P 86
➤ IXFH 36N50P 85
➤ IXFH 36N60P 86
IXFH 40N50Q2 88
➤ IXFH 44N50P 85
➤ IXFH 52N30P 85
➤ IXFH 69N30P 85
➤ IXFH 74N20P 84
➤ IXFH 88N30P 85
➤ IXFH 96N15P 84
➤ IXFH 96N20P 84
➤ IXFH 100N25P 85
➤ IXFH 110N10P 84
➤ IXFH 120N15P 84
➤ IXFH 120N20P 85
➤ IXFH 140N10P 84
➤ IXFH 150N15P 84
➤ IXFH 170N10P 84
➤ IXFI 7N80P 87
IXFK 24N100 88
➤ IXFK 24N80P 87
➤ IXFK 30N100Q2 88
➤ IXFK 32N80P 87
➤ IXFK 36N60P 86
➤ IXFK 38N80Q2 88
➤ IXFK 44N50P 85
➤ IXFK 44N80P 87
➤ IXFK 48N60P 86
IXFK 52N60Q2 88
IXFK 60N55Q2 88
➤ IXFK 64N50P 86
➤ IXFK 64N60P 86
IXFK 66N50Q2 88
➤ IXFK 80N50P 86
➤ IXFK 88N30P 85
➤ IXFK 102N30P 85
➤ IXFK 120N20P 85
➤ IXFK 120N25P 85
➤ IXFK 140N20P 85
➤ IXFK 140N30P 85
➤ IXFK 150N15P 84
➤ IXFK 170N10P 84
IXFK 180N07 88
IXFK 180N10 88
➤ IXFK 180N15P 84
➤ IXFK 200N10P 84
IXFL 34N100 88
➤ IXFL 38N100Q2 56, 88
➤ IXFL 60N80P 87
➤ IXFL 80N50Q2 56, 88
➤ IXFL 82N60P 56, 86
➤ IXFL 100N50P 56, 86
IXFN 230N10 88
IXFN 24N100 88
➤ IXFN 32N80P 87
IXFN 34N100 88
IXFN 36N100 88
IXFN 38N100Q2 88
➤ IXFN 44N80P 87
➤ IXFN 48N60P 86
IXFN 50N80Q2 88
➤ IXFN 60N80P 87
➤ IXFN 64N50P 86
➤ IXFN 64N50PD2 86, 120
➤ IXFN 64N60P 86
IXFN 66N50Q2 88
IXFN 70N60Q2 88
IXFN 72N55Q2 88
➤ IXFN 80N50P 86
IXFN 80N50Q2 88
➤ IXFN 82N60P 86
➤ IXFN 100N50P 86
➤ IXFN 102N30P 85
➤ IXFN 140N20P 85
➤ IXFN 140N30P 85
IXFN 180N07 88
IXFN 180N10 88
➤ IXFN 180N15P 84
➤ IXFN 200N10P 84
IXFN 280N085 88
IXFN 340N07 88
IXFP 3N120 88
➤ IXFP 3N50PM 85
IXFP 4N100Q 88
➤ IXFP 5N50PM 85
➤ IXFP 7N80P 87
➤ IXFP 7N80PM 87
➤ IXFP 8N50PM 85
➤ IXFP 10N60P 86
➤ IXFP 10N80P 87
➤ IXFP 12N50P 85
➤ IXFP 12N50PM 85
➤ IXFP 14N60P 86
➤ IXFP 16N50P 85
➤ IXFQ 10N80P 87
➤ IXFQ 12N80P 87
➤ IXFQ 14N80P 87
IXFR 4N100Q 56, 88
➤ IXFR 14N100Q2 56, 88
➤ IXFR 20N80P 56, 87
IXFR 21N100Q 56
IXFR 24N100 56
➤ IXFR 24N80P 56, 87
IXFR 24N90Q 56
➤ IXFR 30N60P 56, 86
➤ IXFR 32N80P 56, 87
➤ IXFR 36N50P 56, 85
➤ IXFR 36N60P 56, 86
➤ IXFR 38N80Q2 56, 88
IXFR 40N50Q2 56, 88
➤ IXFR 44N50P 56, 86
➤ IXFR 44N80P 56, 87
➤ IXFR 48N60P 56, 86
➤ IXFR 64N50P 56, 86
➤ IXFR 64N60P 56, 86
IXFR 66N50Q2 56, 88
➤ IXFR 80N50P 56, 86
➤ IXFR 102N30P 56, 85
➤ IXFR 140N20P 56, 85
➤ IXFR 140N30P 56, 85
➤ IXFR 180N15P 56, 84
➤ IXFR 200N10P 56, 84
IXFT 4N100Q 88
➤ IXFT 14N80P 87
➤ IXFT 16N80P 87
➤ IXFT 20N80P 87
➤ IXFT 24N80P 87
➤ IXFT 26N60P 86
➤ IXFT 30N50P 85
➤ IXFT 30N60P 86
➤ IXFT 36N50P 85
➤ IXFT 36N60P 86
➤ IXFT 44N50P 85
➤ IXFT 69N30P 85
➤ IXFT 96N20P 84
➤ IXFT 120N15P 84
➤ IXFT 140N10P 84
➤ IXFV 12N80P 87
➤ IXFV 12N80PS 87
➤ IXFV 14N80P 87
➤ IXFV 14N80PS 87
➤ IXFV 16N80P 87
➤ IXFV 16N80PS 87
➤ IXFV 18N60P 86
➤ IXFV 18N60PS 86
➤ IXFV 20N80P 87
➤ IXFV 20N80PS 87
➤ IXFV 22N50P 85
➤ IXFV 22N50PS 85
➤ IXFV 22N60P 86
➤ IXFV 22N60PS 86
➤ IXFV 26N50P 85
➤ IXFV 26N50PS 85
➤ IXFV 26N60P 86
➤ IXFV 26N60PS 86
➤ IXFV 30N50P 85
➤ IXFV 30N50PS 85
➤ IXFV 30N60P 86
➤ IXFV 30N60PS 86
➤ IXFV 36N50P 85
➤ IXFV 36N50PS 85
➤ IXFV 52N30P 85
➤ IXFV 52N30PS 85
➤ IXFV 74N20P 84
➤ IXFV 74N20PS 84
➤ IXFV 96N15P 84
➤ IXFV 96N15PS 84
➤ IXFV 96N20P 84
➤ IXFV 110N10P 84
➤ IXFV 110N10PS 84
IXFX 24N100 88
➤ IXFX 30N100Q2 88
➤ IXFX 32N80P 87
➤ IXFX 38N80Q2 88
➤ IXFX 44N80P 87
➤ IXFX 48N60P 86
IXFX 52N60Q2 88
IXFX 60N55Q2 88
➤ IXFX 64N50P 86
➤ IXFX 64N60P 86
IXFX 66N50Q2 88
➤ IXFX 80N50P 86
➤ IXFX 120N25P 85
➤ IXFX 140N30P 85
IXFX 180N07 88
IXFX 180N10 88
➤ IXFX 180N15P 84
➤ IXFX 200N10P 84
➤ IXG 611P1 140
➤ IXG 611S1 140
IXGA 7N60B 76
IXGA 7N60C 76
IXGA 8N100 75
➤ IXGA 14N120B 76
IXGA 15N120B 76
➤ IXGA 15N120B2 76
IXGA 16N60B2 76
IXGA 16N60B2D1 77
IXGA 16N60C2 77
➤ IXGA 16N60C2D1 78
IXGA 20N100 75
IXGA 20N120 75
IXGC 16N60B2 55, 76
IXGC 16N60B2D1 77
IXGC 16N60C2 55, 77
➤ IXGC 16N60C2D1 55, 78
➤ IXGF 32N170 78
IXGH 6N170 78
IXGH 6N170A 79
IXGH 10N170 78
IXGH 10N170A 79
IXGH 15N120B 76
IXGH 16N170 78
IXGH 16N170A 79
➤ IXGH 16N170AH1 79
IXGH 16N60B2D1 77
➤ IXGH 16N60C2D1 78
IXGH 20N100 75
IXGH 20N120 75
IXGH 20N120B 76
IXGH 24N170 78
IXGH 24N170A 79
➤ IXGH 24N170AH1 79

IXGH 25N160 78
IXGH 28N120B 76
➤ IXGH 30N120B3D1 77
IXGH 30N60B2 76
IXGH 30N60B2D1 77
IXGH 30N60C2 77
➤ IXGH 30N60C2D1 78
IXGH 32N170 78
IXGH 32N170A 79
➤ IXGH 32N90B2 76
➤ IXGH 32N90B2D1 77
IXGH 35N120B 76
➤ IXGH 40N120A2 75
➤ IXGH 40N120B2D1 77
IXGH 40N60B2 76
IXGH 40N60B2D1 77
IXGH 40N60C2 77
➤ IXGH 40N60C2D1 78
IXGH 50N60B2 76
IXGH 50N60C2 77
➤ IXGH 50N90B2 76
➤ IXGH 50N90B2D1 77
IXGH 60N60 75
IXGH 60N60B2 76
IXGH 60N60C2 77
➤ IXGJ 40N60C2D1 78
IXGK 35N120B 76
IXGK 50N60B2D1 77
➤ IXGK 50N60C2D1 78
IXGK 60N60 75
IXGK 60N60B2D1 77
➤ IXGK 60N60C2D1 78
IXGK 120N60B 76
➤ IXGK 120N60C2 77
➤ IXGK 400N30A3 76
IXGN 60N60 75
IXGN 60N60C2 77
➤ IXGN 60N60C2D1 78
➤ IXGN 80N60A2 75
IXGN 200N60A2 75
IXGN 200N60B 76
➤ IXGN 320N60A3 76
➤ IXGN 400N30A3 76
IXGP 7N60B 76
IXGP 7N60C 76
IXGP 8N100 75
➤ IXGP 14N120B 76
IXGP 15N120B 76
➤ IXGP 15N120B2 76
IXGP 16N60B2 76
IXGP 16N60B2D1 77
IXGP 16N60C2 77
➤ IXGP 16N60C2D1 78
IXGP 20N100 75
IXGP 20N120 75
IXGP 30N60B2 76
IXGP 30N60C2 77
➤ IXGQ 20N120B 76
➤ IXGR 16N170AH1 79
➤ IXGR 32N170AH1 79
IXGR 32N170H1 78
➤ IXGR 32N90B2D1 77
IXGR 35N120B 56, 76
IXGR 40N60B2 56, 76
IXGR 40N60B2D1 77
IXGR 40N60C2 56, 77
➤ IXGR 40N60C2D1 78
IXGR 50N60B2 56, 76
IXGR 50N60B2D1 77
IXGR 50N60C2 56, 77
➤ IXGR 50N60C2D1 78
➤ IXGR 50N90B2D1 77
IXGR 60N60B2 56, 76
IXGR 60N60B2D1 77
IXGR 60N60C2 56, 77
➤ IXGR 60N60C2D1 78
IXGR 120N60B 56, 76
IXGR 120N60C2 56, 77
IXGT 6N170 78
IXGT 6N170A 79
IXGT 10N170 78
IXGT 10N170A 79
IXGT 15N120B 76
IXGT 16N170 78
IXGT 16N170A 79
➤ IXGT 16N170AH1 79
IXGT 20N100 75
IXGT 20N120 75
IXGT 20N120B 76
IXGT 24N170 78
IXGT 24N170A 79
➤ IXGT 24N170AH1 79
IXGT 25N160 78
IXGT 28N120B 76
➤ IXGT 30N120B3D1 77
IXGT 30N60B2 76
IXGT 30N60B2D1 77
IXGT 30N60C2 77
➤ IXGT 30N60C2D1 78
IXGT 32N170 78
IXGT 32N170A 79
➤ IXGT 32N90B2 76
➤ IXGT 32N90B2D1 77
IXGT 35N120B 76
➤ IXGT 40N120A2 75
➤ IXGT 40N120B2D1 77
IXGT 40N60B2 76
IXGT 40N60B2D1 77
IXGT 40N60C2 77
➤ IXGT 40N60C2D1 78
IXGT 50N60B2 76
IXGT 50N60C2 77
➤ IXGT 50N90B2 76
➤ IXGT 50N90B2D1 77
IXGT 60N60 75
IXGT 60N60B2 76
IXGT 60N60C2 77
➤ IXGT 60N60C2D1 78
IXGX 32N170AH1 79
IXGX 32N170H1 78
IXGX 35N120B 76
IXGX 50N60B2D1 77
➤ IXGX 50N60C2D1 78
IXGX 60N60B2D1 77
➤ IXGX 60N60C2D1 78
IXGX 120N60B 76
➤ IXGX 120N60C2 77
➤ IXGX 400N30A3 76
➤ IXH 611P1 140
➤ IXH 611S1 140
➤ IXI 848AS1 146
➤ IXI 848S1 146
➤ IXI 858S1 146
➤ IXI 859S1 146
➤ IXJ 611P1 140
➤ IXJ 611S1 140
➤ IXK 611P1 140
➤ IXK 611S1 140
IXKC 13N80C 55, 91
IXKC 20N60C 55, 91
IXKC 25N80C 55, 91
IXKC 40N60C 55, 91
IXKF 40N60SCD1 58, 91
➤ IXKH 35N60C5 91
IXKH 47N60C 91
➤ IXKH 70N60C5 91
IXKK 85N60C 91
IXKL 34N100 56
IXKL 60N80P 56
IXKN 40N60C 91
IXKN 45N80C 91
IXKN 75N60C 91
➤ IXKP 35N60C5 91
IXKR 25N80C 56, 91
IXKR 40N60C 56, 91
IXLF 19N250A 58, 79
IXRH 40N120 80, 121
➤ IXRP 15N120 80, 121
➤ IXRR 40N120 80, 121
➤ IXS 839AQ2 145
➤ IXS 839BQ2 145
➤ IXS 839S1 145
➤ IXSA 10N60B2D1 75
IXSA 15N120B 74
➤ IXSA 20N60B2D1 75
➤ IXSH 10N60B2D1 75
IXSH 15N120B 74
IXSH 15N120BD1 75
➤ IXSH 20N60B2D1 75
IXSH 24N60B 74
IXSH 30N60B 74
➤ IXSH 30N60B2D1 75
IXSH 30N60C 74
IXSH 35N120B 74
IXSH 35N140A 74
IXSH 40N60B 74
➤ IXSH 40N60B2D1 75
IXSH 45N120B 74
IXSH 50N60B 74
IXSK 35N120BD1 75
IXSK 80N60B 74
➤ IXSP 10N60B2D1 75
IXSP 15N120B 74
➤ IXSP 20N60B2D1 75
IXSP 24N60B 74
➤ IXSQ 10N60B2D1 75
➤ IXSQ 20N60B2D1 75
IXSR 35N120BD1 75
IXST 15N120B 74
IXST 15N120BD1 75
IXST 24N60B 74
IXST 30N60B 74
➤ IXST 30N60B2D1 75
IXST 30N60C 74
IXST 35N120B 74
IXST 40N60B 74
➤ IXST 40N60B2D1 75
IXST 45N120B 74
IXSX 35N120BD1 75
IXSX 80N60B 74
IXTA 05N100 89
IXTA 1N100 89
IXTA 1N80 89
IXTA 2N80 89
➤ IXTA 2N80P 84
IXTA 3N120 89
➤ IXTA 3N50P 83
➤ IXTA 3N60P 83
➤ IXTA 4N60P 83
➤ IXTA 4N80P 84
➤ IXTA 5N50P 83
➤ IXTA 5N60P 83
➤ IXTA 6N50P 83
➤ IXTA 7N60P 83
➤ IXTA 8N50P 83
➤ IXTA 10N60P 83
➤ IXTA 14N60P 83
➤ IXTA 16N50P 83
➤ IXTA 36N30P 82
➤ IXTA 42N25P 82
➤ IXTA 50N20P 82
➤ IXTA 62N15P 82
➤ IXTA 75N10P 82
➤ IXTA 80N10T 93
➤ IXTA 80N10T7 93
➤ IXTA 88N085T 92
➤ IXTA 88N085T7 92
➤ IXTA 98N075T 92
➤ IXTA 98N075T7 92
➤ IXTA 110N055P 82
➤ IXTA 110N055T 92
➤ IXTA 110N055T7 92
➤ IXTA 130N10T 93
➤ IXTA 130N10T7 93
➤ IXTA 152N085T 93
➤ IXTA 152N085T7 93
➤ IXTA 160N075T 92
➤ IXTA 160N075T7 92
➤ IXTA 160N10T 93
➤ IXTA 160N10T7 93
➤ IXTA 180N085T 93
➤ IXTA 180N085T7 93
➤ IXTA 180N10T 93
➤ IXTA 180N10T7 93
➤ IXTA 182N055T 92
➤ IXTA 182N055T7 92
➤ IXTA 200N075T 92
➤ IXTA 200N075T7 92
➤ IXTA 200N085T 93
➤ IXTA 200N085T7 93
➤ IXTA 220N055T 92
➤ IXTA 220N055T7 92
➤ IXTA 220N075T 92
➤ IXTA 220N075T7 92
➤ IXTA 240N055T 92
➤ IXTA 240N055T7 92
➤ IXTB 30N100L 90
➤ IXTB 62N50L 90
➤ IXTC 26N50P 83
➤ IXTC 180N10T 55, 93
➤ IXTC 200N085T 55, 93
➤ IXTC 200N10T 55, 93
➤ IXTC 220N075T 55, 92
➤ IXTC 230N085T 55, 93
➤ IXTC 240N055T 55, 92
➤ IXTC 250N075T 55, 92
➤ IXTC280N055T 55, 92
IXTH 1N100 89
IXTH 3N120 89
IXTH 6N120 89
IXTH 8P50 90
➤ IXTH 10N100D 89
IXTH 10P60 90
IXTH 11P50 90
➤ IXTH 12N100L 90
IXTH 12N120 89
IXTH 16P20 90
➤ IXTH 20N50D 89
➤ IXTH 22N50P 83
➤ IXTH 24N50L 90
IXTH 24P20 90
➤ IXTH 26N60P 84
➤ IXTH 30N50P 83
➤ IXTH 30N60P 84
➤ IXTH 36N50P 83
IXTH 36P10 90
IXTH 50P085 90
IXTH 50P10 90
IXTH 88N30P 82
IXTH 96N20P 82
➤ IXTH 200N10T 93
➤ IXTH 230N085T 93
➤ IXTH 250N075T 92
➤ IXTH 280N055T 92
➤ IXTI 10N60P 83
➤ IXTI 12N50P 83
➤ IXTK 22N100L 90
➤ IXTK 46N50L 90
IXTK 82N25P 82
IXTK 88N30P 82
IXTK 100N25P 82
IXTK 102N30P 82
➤ IXTK 120N20P 82
➤ IXTK 120N25P 82
➤ IXTK 140N20P 82
➤ IXTK 150N15P 82
➤ IXTK 170N10P 82
➤ IXTK 180N15P 82
➤ IXTK 200N10P 82
IXTK 250N10 89
➤ IXTN 22N100L 90
➤ IXTN 30N100L 90
➤ IXTN 46N50L 90
➤ IXTN 62N50L 90
IXTP 01N100D 89
IXTP 02N 50D 89
IXTP 05N100 89
IXTP 1N100 89
IXTP 1N80 89
➤ IXTP 1R4N60P 83
➤ IXTP 1R6N50P 83
➤ IXTP 2N100 89
➤ IXTP 2N60P 83
IXTP 2N80 89
➤ IXTP 2N80P 84
➤ IXTP 2R4N50P 83
IXTP 3N120 89
➤ IXTP 3N50P 83
➤ IXTP 3N60P 83
➤ IXTP 4N60P 83
➤ IXTP 4N80P 84
➤ IXTP 5N50P 83
➤ IXTP 5N60P 83
➤ IXTP 6N50P 83
➤ IXTP 7N60P 83
➤ IXTP 8N50P 83
➤ IXTP 8N50PM 83
➤ IXTP 10N60P 83
➤ IXTP 10N60PM 83
➤ IXTP 12N50P 83
➤ IXTP 12N50PM 83
➤ IXTP 14N60P 83
➤ IXTP 16N50P 83
➤ IXTP 36N30P 82
➤ IXTP 42N25P 82
➤ IXTP 44N10T 93
➤ IXTP 50N085T 92
➤ IXTP 50N20P 82
➤ IXTP 50N20PM 82
➤ IXTP 55N075T 92
➤ IXTP 60N10T 93
➤ IXTP 62N15P 82
➤ IXTP 64N055T 92
➤ IXTP 70N085T 92
➤ IXTP 75N10P 82
➤ IXTP 76N075T 92
➤ IXTP 80N10T 93
➤ IXTP 88N085T 93
➤ IXTP 90N055T 92
➤ IXTP 98N075T 92
➤ IXTP 110N055P 82
➤ IXTP 110N055T 92
➤ IXTP 130N10T 93
➤ IXTP 152N085T 93
➤ IXTP 160N075T 92
➤ IXTP 160N10T 93
➤ IXTP 180N085T 93
➤ IXTP 180N10T 93
➤ IXTP 182N055T 92
➤ IXTP 200N075T 92
➤ IXTP 200N085T 93
➤ IXTP 220N055T 92
➤ IXTP 220N075T 92
➤ IXTP 240N055T 92
➤ IXTQ 14N60P 83
➤ IXTQ 16N50P 83
➤ IXTQ 18N60P 84
➤ IXTQ 22N50P 83
➤ IXTQ 22N60P 84
➤ IXTQ 26N50P 83
➤ IXTQ 26N60P 84
➤ IXTQ 30N50P 83
➤ IXTQ 30N60P 84
➤ IXTQ 36N30P 82
➤ IXTQ 36N50P 83
➤ IXTQ 42N25P 82
➤ IXTQ 44N50P 83
➤ IXTQ 50N20P 82
IXTQ 52N30P 82
➤ IXTQ 62N15P 82
IXTQ 64N25P 82
IXTQ 69N30P 82
IXTQ 74N20P 82
➤ IXTQ 75N10P 82
IXTQ 82N25P 82
IXTQ 88N30P 82
IXTQ 96N15P 82
IXTQ 96N20P 82
IXTQ 100N25P 82
➤ IXTQ 110N055P 82
IXTQ 110N10P 82
➤ IXTQ 120N15P 82
➤ IXTQ 120N20P 82
➤ IXTQ 130N10T 93
IXTQ 140N10P 82

➤ IXTQ 150N06P 82
➤ IXTQ 150N15P 82
➤ IXTQ 152N085T 93
➤ IXTQ 160N075T 92
➤ IXTQ 160N10T 93
➤ IXTQ 170N10P 82
➤ IXTQ 180N085T 93
➤ IXTQ 180N10T 93
➤ IXTQ 182N055T 92
➤ IXTQ 200N06P 82
➤ IXTQ 200N075T 92
➤ IXTQ 200N085T 93
➤ IXTQ 200N10T 93
➤ IXTQ 220N055T 92
➤ IXTQ 220N075T 92
➤ IXTQ 230N085T 93
➤ IXTQ 240N055T 92
➤ IXTQ 250N075T 92
➤ IXTQ 280N055T 92
➤ IXTR 200N10P 56, 82
IXTT 1N100 89
IXTT 6N120 89
➤ IXTT 8P50 90
➤ IXTT 10N100D 89
IXTT 11P50 90
➤ IXTT 20N50D 89
➤ IXTT 24P20 90
➤ IXTT 26N50P 83
➤ IXTT 26N60P 84
➤ IXTT 30N50P 83
➤ IXTT 30N60P 84
➤ IXTT 36N50P 83
➤ IXTT 50P10 90
IXTT 52N30P 82
IXTT 64N25P 82
IXTT 69N30P 82
IXTT 74N20P 82
IXTT 82N25P 82
IXTT 88N30P 82
IXTT 96N15P 82
IXTT 96N20P 82
IXTT 100N25P 82
IXTT 110N10P 82
➤ IXTT 120N15P 82
IXTT 140N10P 82
➤ IXTT 170N10P 82
IXTU 01N100 89
➤ IXTU 01N100D 89
IXTU 01N80 89
➤ IXTU 02N50D 89
➤ IXTU 1R4N60P 83
➤ IXTU 44N10T 93
➤ IXTU 50N085T 92
➤ IXTU 55N075T 92
➤ IXTU 60N10T 93
➤ IXTU 64N055T 92
➤ IXTU 70N085T 92
➤ IXTU 76N075T 92
➤ IXTU 90N055T 92
➤ IXTV 18N60P 83
➤ IXTV 18N60PS 84
➤ IXTV 22N50P 83
➤ IXTV 22N50PS 83
➤ IXTV 22N60P 84
➤ IXTV 22N60PS 84
➤ IXTV 26N50P 83
➤ IXTV 26N50PS 83
➤ IXTV 26N60P 84
➤ IXTV 26N60PS 84
➤ IXTV 30N50P 83
➤ IXTV 30N50PS 83
➤ IXTV 30N60P 84
➤ IXTV 30N60PS 84
➤ IXTV 36N50P 83
➤ IXTV 36N50PS 83
➤ IXTV 200N10T 93
➤ IXTV 200N10TS 93
➤ IXTV 230N085T 93
➤ IXTV 230N85TS 93
➤ IXTV 250N075T 92
➤ IXTV 250N075TS 92
➤ IXTV 280N055T 92
➤ IXTV 280N055TS 92
➤ IXTX 22N100L 90
➤ IXTX 46N50L 90
IXTY 01N100 89
➤ IXTY 01N100D 89
IXTY 01N80 89
➤ IXTY 02N50D 89
IXTY 1N80 89
➤ IXTY 1R4N60P 83
➤ IXTY 1R6N50P 83
➤ IXTY 2N80P 84
➤ IXTY 2R4N50P 83
➤ IXTY 3N50P 83
➤ IXTY 3N60P 83
➤ IXTY 5N50P 83
➤ IXTY 2N60P 83
➤ IXTY 44N10T 93
➤ IXTY 50N085T 92
➤ IXTY 55N075T 92
➤ IXTY 60N10T 93
➤ IXTY 64N055T 92
➤ IXTY 70N085T 92
➤ IXTY 76N075T 92
➤ IXTY 90N055T 92
IXUC 60N10 55, 91
IXUC 100N055 55, 91
IXUC 120N10 55, 91
IXUC 160N075 55, 91
IXUC 200N055 55, 91
➤ IXUN 280N10 91
➤ IXUN 350N10 91
IXUV 170N075 91
IXUV 170N075S 91

M

MCC 19-08io1B 116
MCC 19-08io8B 116
MCC 19-12io1B 116
MCC 19-12io8B 116
MCC 19-14io1B 116
MCC 19-14io8B 116
MCC 19-16io1B 116
MCC 19-16io8B 116
MCC 21-08io8B 116
MCC 21-12io8B 116
MCC 21-14io8B 116
MCC 21-16io8B 116
MCC 26-08io1B 116
MCC 26-08io8B 116
MCC 26-12io1B 116
MCC 26-12io8B 116
MCC 26-14io1B 116
MCC 26-14io8B 116
MCC 26-16io1B 116
MCC 26-16io8B 116
MCC 44-08io1B 116
MCC 44-08io8B 116
MCC 44-12io1B 116
MCC 44-12io8B 116
MCC 44-14io1B 116
MCC 44-14io8B 116
MCC 44-16io1B 116
MCC 44-16io8B 116
MCC 44-18io1B 116
MCC 44-18io8B 116
MCC 56-08io1B 116
MCC 56-08io8B 116
MCC 56-12io1B 116
MCC 56-12io8B 116
MCC 56-14io1B 116
MCC 56-14io8B 116
MCC 56-16io1B 116
MCC 56-16io8B 116
MCC 56-18io1B 116
MCC 56-18io8B 116
MCC 72-08io1B 116
MCC 72-08io8B 116
MCC 72-12io1B 116
MCC 72-12io8B 116
MCC 72-14io1B 116
MCC 72-14io8B 116
MCC 72-16io1B 116
MCC 72-16io8B 116
MCC 72-18io1B 116
MCC 72-18io8B 116
MCC 94-20io1B 116
MCC 94-22io1B 116
MCC 95-08io1B 116
MCC 95-08io8B 117
MCC 95-12io1B 116
MCC 95-12io8B 117
MCC 95-14io1B 116
MCC 95-14io8B 117
MCC 95-16io1B 116
MCC 95-16io8B 117
MCC 95-18io1B 116
MCC 95-18io8B 117
MCC 132-08io1 117
MCC 132-12io1 117
MCC 132-14io1 117
MCC 132-16io1 117
MCC 132-18io1 117
MCC 161-20io1 117
MCC 161-22io1 117
MCC 162-08io1 117
MCC 162-12io1 117
MCC 162-14io1 117
MCC 162-16io1 117
MCC 162-18io1 117
MCC 170-12io1 117
MCC 170-14io1 117
MCC 170-16io1 117
MCC 170-18io1 117
MCC 200-14io1 117
MCC 200-16io1 117
MCC 200-18io1 117
MCC 220-08io1 117
MCC 220-12io1 117
MCC 220-14io1 117
MCC 220-16io1 117
MCC 220-18io1 117
MCC 224-20io1 117
MCC 224-22io1 117
MCC 225-12io1 117
MCC 225-14io1 117
MCC 225-16io1 117
MCC 225-18io1 117
MCC 250-08io1 117
MCC 250-12io1 117
MCC 250-14io1 117
MCC 250-16io1 117
MCC 250-18io1 117
MCC 255-12io1 117
MCC 255-14io1 117
MCC 255-16io1 117
MCC 255-18io1 117
MCC 310-08io1 117
MCC 310-12io1 117
MCC 310-14io1 117
MCC 310-16io1 117
MCC 310-18io1 117
MCC 312-12io1 117
MCC 312-14io1 117
MCC 312-16io1 117
MCC 312-18io1 117
MCC 500-12io1 117
MCC 500-14io1 117
MCC 500-16io1 117
MCC 500-18io1 117
MCC 500-22io1 117
MCC 700-12io1W 117
MCC 700-16io1W 117
MCC 700-18io1W 117
MCD 26-08io1B 113
MCD 26-08io8B 113
MCD 26-12io1B 113
MCD 26-12io8B 113
MCD 26-14io1B 113
MCD 26-14io8B 113
MCD 26-16io1B 113
MCD 26-16io8B 113
MCD 40-12io6 113
MCD 40-16io6 113
MCD 44-08io1B 113
MCD 44-08io8B 113
MCD 44-12io1B 113
MCD 44-12io8B 113
MCD 44-14io1B 113
MCD 44-14io8B 113
MCD 44-16io1B 113
MCD 44-16io8B 113
MCD 44-18io1B 113
MCD 44-18io8B 113
MCD 56-08io1B 113
MCD 56-08io8B 113
MCD 56-12io1B 113
MCD 56-12io8B 113
MCD 56-14io1B 113
MCD 56-14io8B 113
MCD 56-16io1B 113
MCD 56-16io8B 113
MCD 56-18io1B 113
MCD 56-18io8B 113
MCD 72-08io1B 113
MCD 72-08io8B 113
MCD 72-12io1B 113
MCD 72-12io8B 113
MCD 72-14io1B 113
MCD 72-14io8B 113
MCD 72-16io1B 113
MCD 72-16io8B 113
MCD 72-18io1B 113
MCD 72-18io8B 113
MCD 94-20io1B 113
MCD 94-22io1B 113
MCD 95-08io1B 113
MCD 95-08io8B 113
MCD 95-12io1B 113
MCD 95-12io8B 113
MCD 95-14io1B 113
MCD 95-14io8B 113
MCD 95-16io1B 113
MCD 95-16io8B 113
MCD 95-18io1B 113
MCD 95-18io8B 113
MCD 132-08io1 113
MCD 132-12io1 113
MCD 132-14io1 113
MCD 132-16io1 113
MCD 132-18io1 113
MCD 161-20io1 113
MCD 161-22io1 113
MCD 162-08io1 114
MCD 162-12io1 114
MCD 162-14io1 114
MCD 162-16io1 114
MCD 162-18io1 114
MCD 200-14io1 114
MCD 200-16io1 114
MCD 200-18io1 114
MCD 220-08io1 114
MCD 220-12io1 114
MCD 220-14io1 114
MCD 220-16io1 114
MCD 224-20io1 114
MCD 224-22io1 114
MCD 225-12io1 114
MCD 225-14io1 114
MCD 225-16io1 114
MCD 225-18io1 114
MCD 250-08io1 114
MCD 250-12io1 114
MCD 250-14io1 114
MCD 250-16io1 114
MCD 250-18io1 114
MCD 255-12io1 114
MCD 255-14io1 114
MCD 255-16io1 114
MCD 255-18io1 114
MCD 310-08io1 114
MCD 310-12io1 114
MCD 310-14io1 114
MCD 310-16io1 114
MCD 310-18io1 114
MCD 310-20io1 114
MCD 310-22io1 114
MCD 312-12io1 114
MCD 312-14io1 114
MCD 312-16io1 114
MCD 312-18io1 114
MCD 500-12io1 114
MCD 500-16io1 114
MCD 500-18io1 114
MCD 500-22io1 114
MCD 700-12io1W 114
MCD 700-16io1W 114
MCD 700-18io1W 114
MCO 25-12io6 118
MCO 25-16io6 118
MCO 50-12io6 118
MCO 50-16io6 118
➤ MCO 75-12io6 118
➤ MCO 75-16io6 118
MCO 100-12io6 118
MCO 100-16io6 118
MCO 150-12io1 118
MCO 150-16io1 118
MCO 450-20io1 118
MCO 450-22io1 118
MCO 500-12io1 118
MCO 500-14io1 118
MCO 500-16io1 118
MCO 500-18io1 118
MCO 600-16io1 118
MCO 600-18io1 118
MCO 600-20io1 118
MCO 600-22io1 118
MDD 26-08N1B 111
MDD 26-12N1B 111
MDD 26-14N1B 111
MDD 26-16N1B 111
MDD 26-18N1B 111
MDD 44-08N1B 111
MDD 44-12N1B 111
MDD 44-14N1B 111
MDD 44-16N1B 111
MDD 44-18N1B 111
MDD 56-08N1B 111
MDD 56-12N1B 111
MDD 56-14N1B 111
MDD 56-16N1B 111
MDD 56-18N1B 111
MDD 72-08N1B 111
MDD 72-12N1B 111
MDD 72-14N1B 111
MDD 72-16N1B 111
MDD 72-18N1B 111
MDD 95-08N1B 111
MDD 95-12N1B 111
MDD 95-14N1B 111
MDD 95-16N1B 111
MDD 95-18N1B 111
MDD 95-20N1B 111
MDD 95-22N1B 111
MDD 142-08N1 111
MDD 142-12N1 111
MDD 142-14N1 111
MDD 142-16N1 111
MDD 142-18N1 111
MDD 172-08N1 111
MDD 172-12N1 111
MDD 172-14N1 111
MDD 172-16N1 111
MDD 172-18N1 111
MDD 200-14N1 111
MDD 200-16N1 111
MDD 200-18N1 111
MDD 200-22N1 111
MDD 220-08N1 112
MDD 220-12N1 112
MDD 220-14N1 112
MDD 220-16N1 112
MDD 220-18N1 112

MDD 250-08N1 112
MDD 250-12N1 112
MDD 250-14N1 112
MDD 250-16N1 112
MDD 255-12N1 112
MDD 255-14N1 112
MDD 255-16N1 112
MDD 255-18N1 112
MDD 255-20N1 112
MDD 255-22N1 112
MDD 310-08N1 112
MDD 310-12N1 112
MDD 310-14N1 112
MDD 310-16N1 112
MDD 310-18N1 112
MDD 310-20N1 112
MDD 310-22N1 112
MDD 312-12N1 112
MDD 312-14N1 112
MDD 312-16N1 112
MDD 312-18N1 112
MDD 312-20N1 112
MDD 312-22N1 112
MDD 600-12N1 112
MDD 600-16N1 112
MDD 600-18N1 112
MDD 600-22N1 112
➤ MDD 950-12N1W 112
➤ MDD 950-16N1W 112
➤ MDD 950-18N1W 112
➤ MDD 950-22N1W 112
MDI 75-12A3 69
MDI 100-12A3 69
MDI 145-12A3 69
MDI 150-12A4 69
MDI 200-12A4 69
MDI 300-12A4 69
MDI 400-12E4 69
MDI 550-12A4 69
MDO 500-12N1 112
MDO 500-14N1 112
MDO 500-16N1 112
MDO 500-18N1 112
MDO 500-20N1 112
MDO 500-22N1 112
MEA 75-12DA 106
MEA 95-06DA 106
MEA 250-12DA 106
MEA 300-06DA 106
MEE 75-12DA 106
MEE 95-06DA 106
MEE 250-12DA 106
MEE 300-06DA 106
MEK 75-12DA 106
MEK 95-06DA 106
MEK 150-04DA 106
MEK 250-12DA 106
MEK 300-06DA 106
MEK 350-02DA 106
MEK 600-04DA 106
MEO 450-12DA 106
MEO 500-06DA 106
MEO 550-02DA 106
➤ MIAA 10WB600TMH 63
➤ MIAA 10WD600TMH 63
➤ MIAA 10WE600TMH 63
➤ MIAA 10WF600TMH 63
➤ MIAA 15WB600TMH 63
➤ MIAA 15WD600TMH 63
➤ MIAA 15WE600TMH 63
➤ MIAA 20WB600TMH 63
➤ MIAA 20WD600TMH 63
➤ MIAA 20WE600TMH 63
MID 75-12A3 69
MID 100-12A3 69
MID 145-12A3 69
MID 150-12A4 69
MID 200-12A4 69
MID 300-12A4 69
MID 400-12E4 69
MID 550-12A4 69
MII 75-12A3 69
MII 100-12A3 69
MII 145-12A3 69
MII 150-12A4 69
MII 200-12A4 69
MII 300-12A4 69
MII 400-12E4 69
➤ MIO 600-65E11 70
➤ MIO 1200-25E10 70
MIO 1200-33E10 70
➤ MIO 1200-33E11 70
➤ MIO 1500-25E10 70
MIO 1800-17E10 70
MIO 2400-17E10 70
➤ MITA 10WB1200TMH 63
➤ MITA 30WB600TMH 63
➤ MITB 10WB1200TMH 63
➤ MITB 15WB1200TMH 63
MKI 50-06A7 68
➤ MKI 50-12E7 68
➤ MKI 50-12F7 68
MKI 75-06A7 68
MKI 75-12E8 68
MKI 100-12E8 68
➤ MKI 100-12F8 68
MLO 36-12io1 134
MLO 36-16io1 134
MLO 75-12io1 134
MLO 75-16io1 134
MLO 110-08io7 134
MLO 110-12io7 134
MLO 110-14io7 134
MLO 140-08io7 134
MLO 140-12io7 134
MLO 140-16io7 134
MLO 175-08io7 134
MLO 175-12io7 134
MLO 175-16io7 134
MLO 230-08io7 134
MLO 230-12io7 134
MLO 230-14io7 134
MLO 230-16io7 134
MLO 230-18io7 134
MMO 36-12io1 134
MMO 36-16io1 134
MMO 62-12io6 134
MMO 62-16io6 134
MMO 74-12io6 134
MMO 74-16io6 134
MMO 75-12io1 134
MMO 75-16io1 134
MMO 90-12io6 134
MMO 90-14io6 134
MMO 90-16io6 134
MMO 110-08io7 134
MMO 110-12io7 134
MMO 110-14io7 134
MMO 140-08io7 134
MMO 140-12io7 134
MMO 140-16io7 134
MMO 175-08io7 134
MMO 175-12io7 134
MMO 175-16io7 134
MMO 230-08io7 134
MMO 230-12io7 134
MMO 230-14io7 134
MMO 230-16io7 134
MMO 230-18io7 134
➤ MPK 95-06DA 106
MUBW 10-06A6K 64
MUBW 10-06A7 64
MUBW 10-12A7 64
MUBW 15-06A6K 64
MUBW 15-06A7 64
MUBW 15-12A6K 64
MUBW 15-12A7 64
➤ MUBW 15-12T7 64
MUBW 20-06A6K 64
MUBW 20-06A7 64
MUBW 25-06A6K 64
MUBW 25-12A7 64
➤ MUBW 25-12T7 64
MUBW 30-06A7 64
MUBW 30-12A6K 64
➤ MUBW 30-12E6K 64
MUBW 35-06A6K 64
MUBW 35-12A7 64
MUBW 35-12A8 65
MUBW 35-12E7 64
➤ MUBW 40-12T7 64
➤ MUBW 45-12T6K 64
MUBW 50-06A7 64
MUBW 50-06A8 65
MUBW 50-12A8 65
MUBW 50-12E8 65
➤ MUBW 50-12T8 65
➤ MUBW 50-17T8 65
MUBW 75-06A8 65
➤ MUBW 75-12T8 65
➤ MUBW 75-17T8 65
MUBW 100-06A8 65
➤ MWI 15-12A6K 66
MWI 15-12A7 66
MWI 25-12A7 66
➤ MWI 25-12E7 66
MWI 30-06A7 66
➤ MWI 30-12E6K 66
MWI 35-12A7 66
➤ MWI 45-12T6K 66
MWI 50-06A7 66
MWI 50-12A7 66
➤ MWI 50-12E6K 66
MWI 50-12E7 66
➤ MWI 50-12T7 66
➤ MWI 60-06G6K 66
MWI 60-12T6K 66
MWI 75-06A7 66
MWI 75-12A8 67
MWI 75-12E8 67
➤ MWI 75-12T7 66
➤ MWI 75-12T8 67
MWI 80-12T6K 66
MWI 100-06A8 67
MWI 100-12A8 67
MWI 100-12E8 67
➤ MWI 100-12T8 67
MWI 150-06A8 67
➤ MWI 150-12T8 67
MWI 200-06A8 67
➤ MWI 225-12E9 67
➤ MWI 225-17E9 67
➤ MWI 300-12E9 67
➤ MWI 300-17E9 67
➤ MWI 450-12E9 67
➤ MWI 450-17E9 67
➤ MX 841 145

T

TX02-4400JI 141
TX02-4400PI 141

U

UGB 3132AD 128
UGB 6124AG 128
UGD 6123AG 128
UGD 8124AG 128
UGE 0221AY4 128
UGE 0421AY4 128
UGE 1112AY4 128
UGE 3126AY4 128

V

VBE 17-06NO7 123
VBE 17-12NO7 123
VBE 20-20NO1 123
VBE 26-06NO7 123
VBE 26-12NO7 123
VBE 55-06NO7 123
VBE 55-12NO7 123
VBE 60-06A 123
VBE 100-06N07 123
VBE 100-12N07 123
VBH 40-05B 122
VBO 13-08NO2 124
VBO 13-12AO2 124
VBO 13-12NO2 124
VBO 13-14AO2 124
VBO 13-14NO2 124
VBO 13-16AO2 124
VBO 13-16NO2 124
VBO 19-08NO7 124
VBO 19-12NO7 124
VBO 20-08NO2 124
VBO 20-12AO2 124
VBO 20-12NO2 124
VBO 20-14AO2 124
VBO 20-14NO2 124
VBO 20-16AO2 124
VBO 20-16NO2 124
VBO 21-08NO7 124
VBO 21-12NO7 124
VBO 22-08NO8 124
VBO 22-12NO8 124
VBO 22-14NO8 124
VBO 22-16NO8 124
VBO 22-18NO8 124
VBO 25-08NO2 124
VBO 25-12AO2 124
VBO 25-12NO2 124
VBO 25-14AO2 124
VBO 25-14NO2 124
VBO 25-16AO2 124
VBO 25-16NO2 124
VBO 30-08NO7 124
VBO 30-12NO7 124
VBO 30-14NO7 124
VBO 30-16NO7 124
VBO 30-18NO7 124
VBO 36-08NO8 124
VBO 36-12NO8 124
VBO 36-14NO8 124
VBO 36-16NO8 124
VBO 36-18NO8 124
VBO 40-08NO6 124
VBO 40-12NO6 124
VBO 40-16NO6 124
VBO 45-08NO7 124
VBO 45-12NO7 124
VBO 45-14NO7 124
VBO 45-16NO7 124
VBO 45-18NO7 124
VBO 50-08NO7 125
VBO 50-12NO7 125
VBO 50-14NO7 125
VBO 50-16NO7 125
VBO 50-18NO7 125
VBO 52-08NO7 125
VBO 52-12NO7 125
VBO 52-14NO7 125
VBO 52-16NO7 125
VBO 52-18NO7 125
VBO 54-08NO7 125
VBO 54-12NO7 125
VBO 54-14NO7 125
VBO 54-16NO7 125
VBO 55-08NO7 125
VBO 55-12NO7 125
VBO 55-14NO7 125
VBO 55-16NO7 125
VBO 55-18NO7 125
VBO 65-08NO7 125
VBO 65-12NO7 125
VBO 65-14NO7 125
VBO 65-16NO7 125
VBO 65-18NO7 125
VBO 68-08NO7 125
VBO 68-12NO7 125
VBO 68-14NO7 125
VBO 68-16NO7 125
VBO 72-08NO7 125
VBO 72-12NO7 125
VBO 72-14NO7 125
VBO 72-16NO7 125
VBO 72-18NO7 125
VBO 78-08NO7 125
VBO 78-12NO7 125
VBO 78-14NO7 125
VBO 78-16NO7 125
VBO 78-18NO7 125
VBO 88-08NO7 125
VBO 88-12NO7 125
VBO 88-14NO7 125
VBO 88-16NO7 125
VBO 88-18NO7 125
VBO 105-08NO7 125
VBO 105-12NO7 125
VBO 105-14NO7 125
VBO 105-16NO7 125
VBO 105-18NO7 125
VBO 125-08NO7 125
VBO 125-12NO7 125
VBO 125-14NO7 125
VBO 125-16NO7 125
VBO 125-18NO7 125
VBO 130-08NO7 125
VBO 130-12NO7 125
VBO 130-14NO7 125
VBO 130-16NO7 125
VBO 130-18NO7 125
VBO 160-08NO7 125
VBO 160-12NO7 125
VBO 160-14NO7 125
VBO 160-16NO7 125
VBO 160-18NO7 125
VCA 105-06io7 115
VCA 105-12io7 115
VCA 105-14io7 115
VCA 105-16io7 115
VCA 105-18io7 115
VCC 2X105-06io7 115
VCC 2X105-12io7 115
VCC 2X105-14io7 115
VCC 2X105-16io7 115
VCC 2X105-18io7 115
VCC 105-06io7 115
VCC 105-12io7 115
VCC 105-14io7 115
VCC 105-16io7 115
VCC 105-18io7 115
VCD 105-06io7 115
VCD 105-12io7 115
VCD 105-14io7 115
VCD 105-16io7 115
VCD 105-18io7 115
VCK 105-06io7 115
VCK 105-12io7 115
VCK 105-14io7 115
VCK 105-16io7 115
VCK 105-18io7 115
VCO 132-08io7 115
VCO 132-12io7 115
VCO 132-14io7 115
VCO 132-16io7 115
VCO 132-18io7 115
VCO 180-08io7 115
VCO 180-12io7 115
VCO 180-14io7 115
VCO 180-16io7 115
VCO 180-18io7 115
VDI 25-06P1 71
VDI 25-12P1 71
VDI 50-06P1 71
VDI 50-12P1 71
VDI 75-06P1 71
VDI 75-12P1 71
VDI 100-06P1 71
VDI 125-12P1 71
VDI 130-06P1 71
VDI 160-12P1 71
VGB 0124AY7A 136
VGF 0136AB 136
VGF 0136AH 136
VGO 36-08io7 127
VGO 36-12io7 127
VGO 36-14io7 127
VGO 36-16io7 127

VGO 55-08io7 127
VGO 55-12io7 127
VGO 55-14io7 127
VGO 55-16io7 127
VHF 15-08io5 126
VHF 15-12io5 126
VHF 15-14io5 126
VHF 15-16io5 126
VHF 25-06io7 126
VHF 25-08io7 126
VHF 25-12io7 126
VHF 28-08io5 126
VHF 28-12io5 126
VHF 28-14io5 126
VHF 28-16io5 126
VHF 36-08io5 126
VHF 36-12io5 126
VHF 36-14io5 126
VHF 36-16io5 126
VHF 55-08io7 126
VHF 55-12io7 126
VHF 55-14io7 126
VHF 55-16io7 126
VHF 85-12io7 126
VHF 85-14io7 126
VHF 125-12io7 126
VHF 125-14io7 126
VHF 125-16io7 126
VHFD 16-08io1 126
VHFD 16-12io1 126
VHFD 16-14io1 126
VHFD 16-16io1 126
VHFD 29-08io1 126
VHFD 29-12io1 126
VHFD 29-14io1 126
VHFD 29-16io1 126
VHFD 37-08io1 126
VHFD 37-12io1 126
VHFD 37-14io1 126
VHFD 37-16io1 126
VHM 40-06P1 94
VHO 55-08io7 127
VHO 55-12io7 127
VHO 55-14io7 127
VHO 55-16io7 127
VID 25-06P1 71
VID 25-12P1 71
VID 50-06P1 71
VID 50-12P1 71
VID 75-06P1 71
VID 75-12P1 71
VID 100-06P1 71
VID 125-12P1 71
VID 130-06P1 71
VID 160-12P1 71
VII 25-06P1 71
VII 25-12P1 71
VII 50-06P1 71
VII 50-12P1 71
VII 75-06P1 71
VII 75-12P1 71
VII 100-06P1 71
VII 130-06P1 71
VIO 25-06P1 71
VIO 25-12P1 71
VIO 50-06P1 71
VIO 50-12P1 71
VIO 75-06P1 71
VIO 75-12P1 71
VIO 100-06P1 71
VIO 125-12P1 71
VIO 130-06P1 71
VIO 160-12P1 71
VKF 55-08io7 127
VKF 55-12io7 127
VKF 55-14io7 127
VKF 55-16io7 127
VKI 50-06P1 72
VKI 50-12P1 72
VKI 75-06P1 72
VKM 40-06P1 94
VKM 60-01P1 94
VKO 55-08io7 127
VKO 55-12io7 127
VKO 55-14io7 127
VKO 55-16io7 127
VMK 90-02T2 94, 121
VMK 165-007T 94, 121
VMM 45-02F 94
VMM 85-02F 94
VMM 90-09F 94
VMM 300-03F 94
VMM 650-01F 94
VMM 1000-01P 95
VMM 1500-0075P 95
VMO 40-05P1 94
VMO 60-05F 94
VMO 80-05P1 94
VMO 150-01P1 94
VMO 550-01F 94
VMO 580-02F 94
VMO 650-01F 94
➤ VMO 1200-01F 94
VTO 39-08HO7 133
VTO 39-12HO7 133
VTO 70-08io7 133
VTO 70-12io7 133
VTO 70-14io7 133
VTO 70-16io7 133
VTO 110-12io7 133
VTO 110-14io7 133
VTO 175-12io7 133
VTO 175-14io7 133
VTO 175-16io7 133
VTOF 70-08io7 133
VTOF 70-12io7 133
VTOF 70-14io7 133
VTOF 70-16io7 133
VUB 33-06P1 122
VUB 50-12PO1 122
VUB 50-16PO1 122
VUB 72-12NO1 122
VUB 72-16NO1 122
VUB 116-16NO1 122
VUB 120-12NO2 122
VUB 120-16NO2 122
➤ VUB 135-22NO1 122
VUB 145-16NO1 122
VUB 160-12NO2 122
VUB 160-16NO2 122
VUBM 33-05P1 122
VUC 25-12go2 132
VUC 25-14go2 132
VUC 25-16go2 132
VUC 36-12go2 132
VUC 36-14go2 132
VUC 36-16go2 132
VUE 22-06NO7 123
VUE 22-12NO7 123
VUE 30-20NO1 123
VUE 35-06NO7 123
VUE 35-12NO7 123
VUE 50-12NO1 123
VUE 75-06NO7 123
VUE 75-12NO7 123
VUE 130-06NO7 123
VUE 130-12NO7 123
VUI 9-06N7 120
VUI 30-12N1 120
VUM 24-05N 120
VUM 25-05E 120
VUM 33-05N 120
VUM 85-05A 120
VUO 16-08NO1 129
VUO 16-12NO1 129
VUO 16-14NO1 129
VUO 16-16NO1 129
VUO 16-18NO1 129
VUO 18-12DT8 123
VUO 18-14DT8 123
VUO 18-16DT8 123
VUO 22-08NO1 129
VUO 22-12NO1 129
VUO 22-14NO1 129
VUO 22-16NO1 129
VUO 22-18NO1 129
VUO 25-08NO8 129
VUO 25-12NO8 129
VUO 25-14NO8 129
VUO 25-16NO8 129
VUO 25-18NO8 129
VUO 27-08NO7 129
VUO 27-12NO7 129
VUO 28-08NO7 129
VUO 28-12NO7 129
VUO 30-08NO3 129
VUO 30-12NO3 129
VUO 30-14NO3 129
VUO 30-16NO3 129
VUO 30-18NO3 129
VUO 34-08NO1 129
VUO 34-12NO1 129
VUO 34-14NO1 129
VUO 34-16NO1 129
VUO 34-18NO1 129
VUO 35-08NO7 129
VUO 35-12NO7 129
VUO 35-14NO7 129
VUO 35-16NO7 129
VUO 35-18NO7 129
VUO 36-08NO8 129
VUO 36-12NO8 129
VUO 36-14NO8 129
VUO 36-16NO8 129
VUO 36-18NO8 129
VUO 50-08NO3 129
VUO 50-12NO3 129
VUO 50-14NO3 129
VUO 50-16NO3 129
VUO 50-18NO3 129
VUO 52-08NO1 129
VUO 52-12NO1 129
VUO 52-14NO1 129
VUO 52-16NO1 129
VUO 52-18NO1 129
VUO 52-20NO1 129
VUO 55-12NO7 129
VUO 55-14NO7 129
VUO 55-16NO7 129
VUO 55-18NO7 129
VUO 60-12NO3 129
VUO 60-14NO3 129
VUO 60-16NO3 129
VUO 60-18NO3 129
VUO 62-08NO7 130
VUO 62-12NO7 130
VUO 62-14NO7 130
VUO 62-16NO7 130
VUO 62-18NO7 130
VUO 68-08NO7 130
VUO 68-12NO7 130
VUO 68-14NO7 130
VUO 68-16NO7 130
VUO 70-08NO7 130
VUO 70-12NO7 130
VUO 70-14NO7 130
VUO 70-16NO7 130
VUO 80-08NO1 130
VUO 80-12NO1 130
VUO 80-14NO1 130
VUO 80-16NO1 130
VUO 80-18NO1 130
VUO 82-08NO7 130
VUO 82-12NO7 130
VUO 82-14NO7 130
VUO 82-16NO7 130
VUO 82-18NO7 130
VUO 85-08NO7 130
VUO 85-12NO7 130
VUO 85-14NO7 130
VUO 85-16NO7 130
VUO 86-08NO7 130
VUO 86-12NO7 130
VUO 86-14NO7 130
VUO 86-16NO7 130
VUO 98-08NO7 130
VUO 98-12NO7 130
VUO 98-14NO7 130
VUO 98-16NO7 130
VUO 100-08NO7 130
VUO 100-12NO7 130
VUO 100-14NO7 130
VUO 100-16NO7 130
VUO 105-12NO7 130
VUO 105-14NO7 130
VUO 105-16NO7 130
VUO 105-18NO7 130
VUO 110-08NO7 130
VUO 110-12NO7 130
VUO 110-14NO7 130
VUO 110-16NO7 130
VUO 110-18NO7 130
VUO 120-12NO1 131
VUO 120-16NO1 131
VUO 121-16NO1 131
VUO 122-08NO7 131
VUO 122-12NO7 131
VUO 122-14NO7 131
VUO 122-16NO7 131
VUO 122-18NO7 131
VUO 125-12NO7 131
VUO 125-14NO7 131
VUO 125-16NO7 131
VUO 125-18NO7 131
VUO 155-12NO1 131
VUO 155-16NO1 131
VUO 160-08NO7 131
VUO 160-12NO7 131
VUO 160-14NO7 131
VUO 160-16NO7 131
VUO 160-18NO7 131
VUO 190-08NO7 131
VUO 190-12NO7 131
VUO 190-14NO7 131
VUO 190-16NO7 131
VUO 190-18NO7 131
VVY 40-16io1 127
VVZ 12-12io1 132
VVZ 12-14io1 132
VVZ 12-16io1 132
VVZ 24-12io1 132
VVZ 24-14io1 132
VVZ 24-16io1 132
VVZ 39-08HO7 132
VVZ 39-12HO7 132
VVZ 40-12io1 132
VVZ 40-14io1 132
VVZ 40-16io1 132
VVZ 70-08io7 132
VVZ 70-12io7 132
VVZ 70-14io7 132
VVZ 70-16io7 132
VVZ 110-12io7 132
VVZ 110-14io7 132
VVZ 175-12io7 132
VVZ 175-14io7 132
VVZ 175-16io7 132
VVZB 120-12io2 122
VVZB 120-16io2 122
VVZB 135-16NO1 122
VVZB 170-16NO1 122
VVZF 70-08io7 132
VVZF 70-12io7 132
VVZF 70-14io7 132
VVZF 70-16io7 132
VW 2x30-08io1 134
VW 2x30-12io1 134
VW 2x30-14io1 134
VW 2x30-16io1 134
VW 2x45-08io1 134
VW 2x45-12io1 134
VW 2x45-14io1 134
VW 2x45-16io1 134
VW 2x60-08io1 134
VW 2x60-12io1 134
VW 2x60-14io1 134
VW 2x60-16io1 134
VWI 6-12P1 72
VWI 15-12P1 72
VWI 20-06P1 72
VWI 35-06P1 72
VWI 3X20-06P1 72
VWM 200-01P 95
VWM 350-0075P 95
VWO 35-08HO7 135
VWO 35-12HO7 135
VWO 36-08io7 135
VWO 36-12io7 135
VWO 36-14io7 135
VWO 36-16io7 135
VWO 40-08io7 135
VWO 40-12io7 135
VWO 40-14io7 135
VWO 40-16io7 135
VWO 50-08io7 135
VWO 50-12io7 135
VWO 50-14io7 135
VWO 50-16io7 135
VWO 60-08io7 135
VWO 60-12io7 135
VWO 60-14io7 135
VWO 60-16io7 135
VWO 80-08io7 135
VWO 80-12io7 135
VWO 80-14io7 135
VWO 85-08io1 135
VWO 85-12io1 135
VWO 85-14io1 135
VWO 85-16io1 135
VWO 95-08io7 135
VWO 95-12io7 135
VWO 95-14io7 135
VWO 140-08io1 135
VWO 140-12io1 135
VWO 140-14io1 135
VWO 140-16io1 135

X

➤ XOB 17-04x3 149
➤ XOB 17-12x1 149
XOD 17-04B 148
XOD 17-07B 148
XOD 17-12B 148
XOD 17-24B 148
XOD 17-36B 148
XOD 17-48B 148

WESTCODE

A

Assemblies 182 ff

C

C 0030BG400SAA 181
C 0030BG400SAB 181
C 0030BG400SAC 181
C 0030BG400SAD 181
C 0030BG400SAK 181
C 0030BG400SAL 181
C 0030BG400SAM 181
C 0030BG400SAN 181
C 0030BG400SAP 181
C 0030BG400SAR 181
CMK 0600D74M 186
CMK 0600S74M 186
CMK 1000D74M 186
CMK 1000S74M 186
CMK 1100D76M 186
CMK 1130D76M 186
CMK 1130DT76M 186
CMK 1130S76M 186
CMK 1500B 34M 186
CMK 1800D76M 186
CMK 1800DT76M 186
CMK 1800S76M 186
CMK 2000D114M 186
CMK 2000S114M 186
CMK 2100D76M 186
CMK 2100S76M 186
CMK 2140D76M 186
CMK 2140DT76M 186
CMK 2140S76M 186
CMK 2500D114M 186
CMK 2500D116M 186
CMK 2500S114M 186
CMK 2500S116M 186
CMK 2700D76M 186
CMK 2700DT76M 186
CMK 2700S76M 186
CMK 3000D116M 186
CMK 3000S116M 186
CMK 3060D140ML 186
CMK 3060S140ML 186
CMK 3500D116M 186
CMK 3500S116M 186
CMK 4000D116M 186
CMK 4000S116M 186
CMK 450B19M 186
CMK 450B25M 186
CMK 450D56M 186
CMK 450DT56M 186
CMK 450S56M 186
CMK 5000D128M 186
CMK 550D56M 186
CMK 550S56M 186
CMK 6120D180ML 186
CMK 6120S180ML 186
CMK 7000D128M 186
CMK 9000D160M 186
CMK 9000S160M 186
CMK 900D56M 186
CMK 900DT56M 186
CMK 900S56M 186
Cooler 188

E

E 0300YH400 162
E 0300YH450 162
E 0400YH200 162
E 0400YH250 162
E 0900NC400 162
E 0900NC450 162
E 1500NC200 162
E 1500NC250 162
E 1500VF400 162
E 1500VF450 162
E 2000NC140 162
E 2000NC170 162
E 2500VF200 162
E 2500VF250 162
EX 175TC400 162
EX 175TC450 162

F

➤ F 0240YC250 161
➤ F 0240YC300 161
➤ F 0240YH250 161
➤ F 0240YH300 161
F 0300WC140 161
F 0300WC180 161
F 0800LC140 161
F 0800LC180 161
F 0900VC450 161
F 0900VC520 161
F 0900VF450 161
F 0900VF520 161
F 1000LC080 161
F 1000LC120 161
F 1400NC140 161
F 1400NC180 161
F 1500NC200 161
F 1500NC250 161
F 1600NC080 161
F 1600NC120 161

G

G 1000NC450 178
G 2000VC250 178
G 2000VC450 178
G 3000TC250 178
G 3000TC450 178
G 3000TC600 178
G 4000EC450 178
GX 152QC450 178
GX 185QC250 178

H

H 0700KC17D 178
H 0700KC17Y 178
H 1200NC200 178
H 1200NC20Y 178
H 1200NC25D 178
H 1200NC25Y 178
H0500KC200 178
H0500KC20Y 178
H0500KC25D 178
H0500KC25Y 178
H0700KC140 178
H0700KC14Y 178
Heatsink 187

K

K 0349LC600 168
K 0349LC650 168
K 0769NC600 168
K 0769NC650 168
K 0890NC360 168
K 0890NC420 168
K 1121NC320 168
K 1121NC360 168
K 1197NC300 168
K 1197NC320 168
➤ K 1351VC600 168
➤ K 1351VC650 168
➤ K 1351VF600 168
➤ K 1351VF650 168
K 1947ZC400 168
K 1947ZC450 168
K 1947ZD400 168
K 1947ZD450 168
K 2095ZC360 168
K 2095ZC420 168
K 2095ZD360 168
K 2095ZD420 168
K 2359TC600 168
K 2359TC650 168
K 2359TD600 168
K 2359TD650 168
K 2623TC450 168
K 2623TC520 168
K 2623TD450 168
K 2623TD520 168
K 2960TC450 168
K 2960TC520 168
K 2960TD450 168
K 2960TD520 168
K 2973FC600 168
K 2973FC650 168
K 2973FD600 168
K 2973FD650 168
K 3362TC360 168
K 3362TC420 168
K 3362TD360 168
K 3362TD420 168
K 3503FC450 168
K 3503FC520 168
K 3503FD450 168
K 3503FD520 168
KX 101FC360 168
KX 101FC420 168
KX 101FD360 168
KX 101FD420 168

M

M 0130RL200 157
M 0130RL250 157
➤ M 0130RM 200 157
➤ M 0130RM 250 157
M 0130SL200 157
M 0130SL250 157
➤ M 0130SM200 157
➤ M 0130SM250 157
➤ M 0139RL120 157
➤ M 0139RL180 157
M 0139RM120 157
M 0139RM180 157
➤ M 0139SL120 157
➤ M 0139SL180 157
M 0139SM120 157
M 0139SM180 157
M 0225YH300 159
M 0225YH360 159
M 0225YH450 159
M 0268RC200 157
M 0268RC250 157
M 0268RJ200 157
M 0268RJ250 157
M 0268SC200 157
M 0268SC250 157
M 0268SJ200 157
M 0268SJ250 157
M 0280RC200 157
M 0280RC250 157
M 0280RJ200 157
M 0280RJ250 157
M 0280SC200 157
M 0280SC250 157
M 0280SJ200 157
M 0280SJ250 157
M 0310YH300 159
M 0310YH350 159
M 0334RC120 157
M 0334RC200 157
M 0334RJ120 157
M 0334RJ200 157
M 0334SC120 157
M 0334SC200 157
M 0334SJ120 157
M 0334SJ200 157
M 0336RA120 157
M 0336RA140 157
M 0336SA120 157
M 0336SA140 157
M 0347WC160 159
M 0347WC200 159
M 0347WC250 159
M 0358WC120 159
M 0358WC180 159
M 0367WC140 159
M 0367WC220 159
M 0367WC280 159
M 0371YH350 159
M 0371YH450 159
M 0433WC120 159
M 0433WC160 159
M 0433WC200 159
M 0437WC080 159
M 0437WC140 159
M 0451YC120 159
M 0451YC160 159
M 0451YC200 159
M 0451YH120 159
M 0451YH160 159
M 0451YH200 159
M 0588LC400 158
M 0588LC450 158
M 0659LC400 159
M 0659LC450 159
M 0710LC560 159
M 0710LC600 159
M 0736LC400 159
M 0736LC450 159
M 0759YC040 159
M 0759YC120 159
M 0759YC160 159
M 0759YH040 159
M 0759YH120 159
M 0759YH160 159
M 0790YC200 158
M 0790YC250 158
M 0790YH200 158
M 0790YH250 158
M 0859LC140 159
M 0859LC160 159
M 0863LC260 159
M 0863LC300 159
M 0863LC360 159
M 0872LC140 159
M 0872LC180 159
M 0872LC210 159
M 0914LC200 158
M 0914LC250 158
M 0955LC200 159
M 0955LC250 159
M 1010NC400 158
M 1010NC450 158
M 1022LC120 159
M 1022LC160 159
M 1022LC200 159
M 1080LC100 159
M 1080LC120 159
M 1102NC500 159
M 1102NC600 159
M 1104NC400 159
M 1104NC450 159
M 1163NC400 158
M 1163NC450 158
M 1242NC260 160
M 1242NC360 160
M 1494NC160 160
M 1494NC250 160
M 1502NC200 158
M 1502NC250 158
M 1565VC400 160
M 1565VC450 160
M 1565VF400 160
M 1565VF450 160
M 1583VC400 158
M 1583VC450 158
M 1583VF400 158
M 1583VF450 158
M 1609NC200 158
M 1609NC260 158
M 1858NC120 160
M 1858NC160 160
M 2273VC300 160
M 2273VC360 160
M 2273VF300 160
M 2273VF360 160
M 2322ZC300 160
M 2322ZC400 160
M 2322ZD300 160
M 2322ZD400 160
M 2408NC020 158
M 2408NC060 158
M 2408ND020 158
M 2408ND060 158
M 2413VC200 160
M 2413VC250 160
M 2413VF200 160
M 2413VF250 160
M 2639ZC360 158
M 2639ZC420 158
M 2639ZD360 158
M 2639ZD420 158
M 2698ZC250 158
M 2698ZC280 158
M 2698ZC350 158
M 2698ZD250 158
M 2698ZD280 158
M 2698ZD350 158
M 2837VC180 158
M 2837VC250 158
M 2837VF180 158
M 2837VF250 158
M 3770ZC200 158
M 3770ZC240 158
M 3770ZC300 158
M 3770ZD200 158
M 3770ZD240 158
M 3770ZD300 158

N

N 0131SH120 163
N 0131SH160 163
➤ N 0131SJ120 163
➤ N 0131SJ160 163
N 0180SH120 163
N 0180SH160 163
➤ N 0180SJ120 163
➤ N 0180SJ160 163
N 0194WC120 165
N 0194WC160 165
N 0255WC120 165
N 0255WC160 165
N 0290SC120 163
N 0290SC160 163
➤ N 0290SG120 163
➤ N 0290SG160 163
N 0335SC120 163
N 0335SC160 163
➤ N 0335SG120 163
➤ N 0335SG160 163
N 0339WC120 165
N 0339WC160 165
N 0392WC120 165
N 0392WC160 165
N 0416SC020 163
N 0416SC080 163
➤ N 0416SG020 163
➤ N 0416SG080 163
N 0491WC020 165
N 0491WC080 165
N 0606YS200 165
N 0606YS250 165
N 0616LC400 165
N 0616LC450 165
N 0634LC380 165
N 0634LC420 165
N 0646LC300 165
N 0646LC360 165
N 0676YS120 165
N 0676YS180 165
N 0734YS120 165
N 0734YS160 165
N 0782YS120 165
N 0782YS140 165
N 0882NC400 165
N 0882NC450 165
N 0910LS200 165
N 0910LS260 165
N 0992YS020 165
N 0992YS060 165

N 1010NC300 165
N 1010NC380 165
N 1042LS120 165
N 1042LS180 165
N 1114LS120 165
N 1114LS180 165
N 1132NC300 165
N 1132NC320 165
N 1159NC380 165
N 1159NC420 165
N 1265LS120 165
N 1265LS150 165
N 1297NS200 165
N 1297NS260 165
N 1314NC300 165
N 1314NC360 165
N 1351VC400 165
N 1351VC450 165
N 1351VD400 165
N 1351VD450 165
N 1467NS200 165
N 1467NS260 165
N 1479NS240 165
N 1479NS300 165
N 1547NS160 165
N 1547NS200 165
N 1588NS200 165
N 1588NS260 165
N 1651QK200 164
N 1651QK220 164
N 1661VC300 166
N 1661VC360 166
N 1661VD300 166
N 1661VD360 166
N 1712VC240 166
N 1712VC300 166
N 1712VD240 166
N 1712VD300 166
N 1718NS120 166
N 1718NS180 166
N 1802NS120 166
N 1802NS160 166
N 1806QK160 164
N 1806QK180 164
N 2046NS120 166
N 2046NS160 166
N 2083QK080 164
N 2083QK140 164
N 2086NS060 166
N 2086NS100 166
N 2172ZC400 166
N 2172ZC450 166
N 2172ZD400 166
N 2172ZD450 166
N 2293VC180 166
N 2293VC220 166
N 2293VD180 166
N 2293VD220 166
N 2367MK200 164
N 2367MK220 164
N 2418ZC300 166
N 2418ZC360 166
N 2418ZD300 166
N 2418ZD360 166
N 2500VC120 166
N 2500VC160 166
N 2500VD120 166
N 2500VD160 166
N 2543ZC240 166
N 2543ZC300 166
N 2543ZD240 166
N 2543ZD300 166
N 2593MK160 164
N 2593MK180 164
N 3012ZC200 166
N 3012ZC260 166
N 3012ZD200 166
N 3012ZD260 166
N 3476TC360 166
N 3476TC420 166
N 3476TD360 166
N 3476TD420 166
N 3533ZC140 166
N 3533ZC220 166
N 3533ZD140 166
N 3533ZD220 166
N 3839TC300 166
N 3839TC350 166
N 3839TD300 166
N 3839TD350 166
N 4004MK020 164
N 4004MK060 164
N 4085ZC080 166
N 4085ZC120 166
N 4085ZD080 166
N 4085ZD120 166
N 4151FC360 167
N 4151FC420 167
N 4151FD360 167
N 4151FD420 167
N 4400TC120 167
N 4400TC220 167
N 4400TC280 167
N 4400TD120 167
N 4400TD220 167
N 4400TD280 167
N 4472HK160 164
N 4472HK180 164
N 4803FC300 167
N 4803FC350 167
N 4803FD300 167
N 4803FD350 167
N 5177FC200 167
N 5177FC280 167
N 5177FD200 167
N 5177FD280 167
N 5946FC180 167
N 5946FC220 167
N 5946FD180 167
N 5946FD220 167
NX 149MK120 164
NX 149MK140 164
NX 155QK020 164
NX 155QK060 164
NX 157HK020 164
NX 157HK060 164
NX 159JK020 164
NX 159JK060 164
NX 159JK120 164
NX 159JK140 164
NX 159JK160 164
NX 159JK180 164
NX 159JK200 164
NX 159JK220 164
NX 160HK120 164
NX 160HK140 164
NX 160HK200 164
NX 160HK220 164

P

P 0128SH10D 170
P 0128SH10E 170
P 0128SH10F 170
P 0128SH12D 170
P 0128SH12E 170
P 0128SH12F 170
P 0128SJ10D 170
P 0128SJ10E 170
P 0128SJ10F 170
P 0128SJ12D 170
P 0128SJ12E 170
P 0128SJ12F 170
P 0248SC10D 170
P 0248SC10E 170
P 0248SC10F 170
P 0248SC12D 170
P 0248SC12E 170
P 0248SC12F 170
P 0248SG10D 170
P 0248SG10E 170
P 0248SG10F 170
P 0248SG12D 170
P 0248SG12E 170
P 0248SG12F 170
P 0273SC10D 170
P 0273SC10E 170
P 0273SC10F 170
P 0273SC12D 170
P 0273SC12E 170
P 0273SC12F 170
P 0273SG10D 170
P 0273SG10E 170
P 0273SG10F 170
P 0273SG12D 170
P 0273SG12E 170
P 0273SG12F 170
P 0295WC12D 172
P 0295WC12E 172
P 0295WC12F 172
P 0306SC04A 170
P 0306SC04B 170
P 0306SC04C 170
P 0306SC08A 170
P 0306SC08B 170
P 0306SC08C 170
P 0306SG04A 170
P 0306SG04B 170
P 0306SG04C 170
P 0306SG08A 170
P 0306SG08B 170
P 0306SG08C 170
P 0311SC10E 171
P 0311SC10F 171
P 0311SC10G 171
P 0311SC12E 171
P 0311SC12F 171
P 0311SC12G 171
P 0311SG10E 171
P 0311SG10F 171
P 0311SG10G 171
P 0311SG12E 171
P 0311SG12F 171
P 0311SG12G 171
P 0327WC12D 172
P 0327WC12E 172
P 0327WC12F 172
P 0330SC04C 171
P 0330SC04D 171
P 0330SC08C 171
P 0330SC08D 171
P 0330SG04C 171
P 0330SG04D 171
P 0330SG08C 171
P 0330SG08D 171
P 0366WC04A 172
P 0366WC04B 172
P 0366WC04C 172
P 0366WC08A 172
P 0366WC08B 172
P 0366WC08C 172
P 0367WC12E 172
P 0367WC12F 172
P 0367WC12G 172
P 0389WC04C 172
P 0389WC04D 172
P 0389WC08C 172
P 0389WC08D 172
P 0431SC04B 171
P 0431SC04C 171
P 0431SC06B 171
P 0431SC06C 171
P 0431SG04B 171
P 0431SG04C 171
P 0431SG06B 171
P 0431SG06C 171
P 0515WC04B 172
P 0515WC04C 172
P 0515WC04D 172
P 0515WC06B 172
P 0515WC06C 172
P 0515WC06D 172
P 0848YS04B 172
P 0848YS04C 172
P 0848YS04D 172
P 0848YS06B 172
P 0848YS06C 172
P 0848YS06D 172
P 1007LS12D 172
P 1007LS12E 172
P 1007LS12F 172

R

R 0487YS10D 173
R 0487YS10E 173
R 0487YS10F 173
R 0487YS14D 173
R 0487YS14E 173
R 0487YS14F 173
R 0577YS08C 173
R 0577YS08D 173
R 0577YS08E 173
R 0577YS12C 173
R 0577YS12D 173
R 0577YS12E 173
R 0633YS08D 173
R 0633YS08E 173
R 0633YS08F 173
R 0633YS12D 173
R 0633YS12E 173
R 0633YS12F 173
R 0717LS14G 173
R 0717LS14H 173
R 0717LS14J 173
R 0717LS16G 173
R 0717LS16H 173
R 0717LS16J 173
R 0736LS20J 173
R 0736LS20K 173
R 0736LS20L 173
R 0736LS20M 173
R 0736LS25J 173
R 0736LS25K 173
R 0736LS25L 173
R 0736LS25M 173
R 0809LS06A 173
R 0809LS06B 173
R 0809LS06C 173
R 0809LS10A 173
R 0809LS10B 173
R 0809LS10C 173
R 0830LS10D 173
R 0830LS10E 173
R 0830LS10F 173
R 0830LS10G 173
R 0830LS14D 173
R 0830LS14E 173
R 0830LS14F 173
R 0830LS14G 173
R 0878LS14K 173
R 0878LS14M 173
R 0878LS18K 173
R 0878LS18M 173
R 0878LS21K 173
R 0878LS21M 173
R 0929LS08C 174
R 0929LS08D 174
R 0929LS08E 174
R 0929LS12C 174
R 0929LS12D 174
R 0929LS12E 174
R 0964LS08D 174
R 0964LS08E 174
R 0964LS08F 174
R 0964LS12D 174
R 0964LS12E 174
R 0964LS12F 174
R 0990LS04A 174
R 0990LS04B 174
R 0990LS04C 174
R 0990LS08A 174
R 0990LS08B 174
R 0990LS08C 174
R 1124NS14K 174
R 1124NS14M 174
R 1124NS18K 174
R 1124NS18M 174
R 1124NS21K 174
R 1124NS21M 174
R 1127NC32R 174
R 1127NC32S 174
R 1127NC32T 174
R 1127NC36R 174
R 1127NC36S 174
R 1127NC36T 174
R 1158NS24N 174
R 1158NS24P 174
R 1158NS26N 174
R 1158NS26P 174
R 1178NS10E 174
R 1178NS10F 174
R 1178NS10G 174
R 1178NS14E 174
R 1178NS14F 174
R 1178NS14G 174
R 1211NS08D 174
R 1211NS08E 174
R 1211NS12D 174
R 1211NS12E 174
R 1271NS08D 174
R 1271NS08E 174
R 1271NS08G 174
R 1271NS12D 174
R 1271NS12E 174
R 1271NS12G 174
R 1275NS14L 174
R 1275NS14M 174
R 1275NS18L 174
R 1275NS18M 174
R 1275NS21L 174
R 1275NS21M 174
R 1279NS22J 175
R 1279NS22K 175
R 1279NS22M 175
R 1279NS25J 175
R 1279NS25K 175
R 1279NS25M 175
R 1280NS18J 175
R 1280NS18K 175
R 1280NS18M 175
R 1280NS21J 175
R 1280NS21K 175
R 1280NS21M 175
R 1280NS25J 175
R 1280NS25K 175
R 1280NS25M 175
R 1331NS10B 175
R 1331NS10C 175
R 1331NS10D 175
R 1331NS12B 175
R 1331NS12C 175
R 1331NS12D 175
R 1446NS08E 175
R 1446NS08F 175
R 1446NS08G 175
R 1446NS12E 175
R 1446NS12F 175
R 1446NS12G 175
R 1448NS14H 175
R 1448NS14J 175
R 1448NS14L 175
R 1448NS18H 175
R 1448NS18J 175
R 1448NS18L 175
R 1448NS20H 175
R 1448NS20J 175
R 1448NS20L 175
R 2475ZC20N 175
R 2475ZC28N 175
R 2475ZD20N 175
R 2475ZD28N 175
R 2619ZC18J 175
R 2619ZC18K 175
R 2619ZC18L 175
R 2619ZC21J 175
R 2619ZC21K 175

➤ new

R 2619ZC21L 175
R 2619ZC25J 175
R 2619ZC25K 175
R 2619ZC25L 175
R 2619ZD18J 175
R 2619ZD18K 175
R 2619ZD18L 175
R 2619ZD21J 175
R 2619ZD21K 175
R 2619ZD21L 175
R 2619ZD25J 175
R 2619ZD25K 175
R 2619ZD25L 175
R 2620ZC22J 176
R 2620ZC22K 176
R 2620ZC22L 176
R 2620ZC25J 176
R 2620ZC25K 176
R 2620ZC25L 176
R 2620ZD22J 176
R 2620ZD22K 176
R 2620ZD22L 176
R 2620ZD25J 176
R 2620ZD25K 176
R 2620ZD25L 176
R 2714ZC16H 176
R 2714ZC16J 176
R 2714ZC16K 176
R 2714ZC18H 176
R 2714ZC18J 176
R 2714ZC18K 176
R 2714ZD16H 176
R 2714ZD16J 176
R 2714ZD16K 176
R 2714ZD18H 176
R 2714ZD18J 176
R 2714ZD18K 176
R 3047TC24N 176
R 3047TC24R 176
R 3047TC24T 176
R 3047TC28N 176
R 3047TC28R 176
R 3047TC28T 176
R 3047TD24N 176
R 3047TD24R 176
R 3047TD24T 176
R 3047TD28N 176
R 3047TD28R 176
R 3047TD28T 176
R 3370ZC10C 176
R 3370ZC10D 176
R 3370ZC10E 176
R 3370ZC12C 176
R 3370ZC12D 176
R 3370ZC12E 176
R 3370ZD10C 176
R 3370ZD10D 176
R 3370ZD10E 176
R 3370ZD12C 176
R 3370ZD12D 176
R 3370ZD12E 176
R 3559TC16K 176
R 3559TC16N 176
R 3559TC16R 176
R 3559TC16T 176
R 3559TC20K 176
R 3559TC20N 176
R 3559TC20R 176
R 3559TC20T 176
R 3559TD16K 177
R 3559TD16N 177
R 3559TD16R 177
R 3559TD16T 177
R 3559TD20K 177
R 3559TD20N 177
R 3559TD20R 177
R 3559TD20T 177
R 3708FC40V 177
R 3708FC40W 177
R 3708FC45V 177
R 3708FC45W 177
R 3708FD40V 177
R 3708FD40W 177
R 3708FD45V 177
R 3708FD45W 177
RX 075FC24R 177
RX 075FC24T 177
RX 075FC28R 177
RX 075FC28T 177
RX 075FD24R 177
RX 075FD24T 177
RX 075FD28R 177
RX 075FD28T 177

S

S 0500KC200 178
S 0500KC20Y 178
S 0500KC25D 178
S 0500KC25Y 178
S 0700KC140 178
S 0700KC14Y 178
S 0700KC17D 178
S 0700KC17Y 178
S 1200NC200 178
S 1200NC20Y 178
S 1200NC25D 178
S 1200NC25Y 178
SXB 11987HEX 184
SXB 1214FG 184
SXB 1265FB 184
SXB 1375B 184
SXB 1645FB 184
SXB 1764FG 184
SXB 1920G 184
SXB 2096B 184
SXB 2167FB 184
SXB 2324FG 184
SXB 2428HEXT 184
SXB 2939G 184
SXB 3120FG 184
SXB 3442B 184
SXB 3529HEXT 184
SXB 3840HEX 184
SXB 4264B 184
SXB 4649HEXT 184
SXB 4869G 184
SXB 5877HEX 184
SXB 5993G 184
SXB 6240HEXT 184
SXB 868FB 184
SXB 9737HEX 184

T

T 0160NA45A 180
T 0240NA45E 180
T 0360NA25A 180
T 0500NA25E 180
T 0600T A45A 180
T 0800T A45E 180
T 0900EA45A 180
T 1200EA45E 180
T 1200T A25A 180
T 1500T A25E 180
T 1800GA45A 180
T 2400GA45E 180
TX 115TA17A 180
TX 116TA17E 180
TX 167NA17E 180
TX 168NA17A 180

W

W 0438RC160 152
W 0438RC200 152
W 0438RC240 152
W 0438RD160 152
W 0438RD200 152
W 0438RD240 152
W 0438SC160 152
W 0438SC200 152
W 0438SC240 152
W 0438SD160 152
W 0438SD200 152
W 0438SD240 152
W 0503RC160 152
W 0503RC200 152
W 0503RC240 152
W 0503RD160 152
W 0503RD200 152
W 0503RD240 152
W 0503SC160 152
W 0503SC200 152
W 0503SC240 152
W 0503SD160 152
W 0503SD200 152
W 0503SD240 152
W 0507YH360 153
W 0507YH450 153
W 0508RA040 152
W 0508RA120 152
W 0508RA150 152
W 0508RB040 152
W 0508RB120 152
W 0508RB150 152
W 0508SA040 152
W 0508SA120 152
W 0508SA150 152
W 0508SB040 152
W 0508SB120 152
W 0508SB150 152
W 0614W C160 153
W 0614W C200 153
W 0614W C240 153
W 0628RA040 152
W 0628RA120 152
W 0628RA150 152
W 0628RB040 152
W 0628RB120 152
W 0628RB150 152
W 0628SA040 152
W 0628SA120 152
W 0628SA150 152
W 0628SB040 152
W 0628SB120 152
W 0628SB150 152
W 0642W C160 153
W 0642W C200 153
W 0642W C240 153
W 0646W C060 153
W 0646W C120 153
W 0646W C150 153
W 0735RA040 152
W 0735RA120 152
W 0735RA150 152
W 0735RB040 152
W 0735RB120 152
W 0735RB150 152
W 0735SA040 152
W 0735SA120 152
W 0735SA150 152
W 0735SB040 152
W 0735SB120 152
W 0735SB150 152
W 0797W C040 153
W 0797W C120 153
W 0797W C150 153
W 0944W C040 153
W 0944W C120 153
W 0944W C150 153
W 1032LC500 153
W 1032LC560 153
W 1032LC600 153
W 1074YC200 153
W 1074YC320 153
W 1074YH200 153
W 1074YH320 153
W 1185LC300 153
W 1185LC360 153
W 1185LC450 153
W 1263YC160 153
W 1263YC250 153
W 1263YH160 153
W 1263YH250 153
W 1294NC500 153
W 1294NC600 153
W 1411LC300 153
W 1411LC360 153
W 1520NC500 153
W 1520NC600 153
W 1524LC240 153
W 1524LC300 153
W 1608NC400 153
W 1608NC500 153
W 1748LC080 153
W 1748LC180 153
W 1748LC220 153
W 1856NC400 153
W 1856NC500 153
W 2020NC360 153
W 2020NC450 153
W 2052NC300 153
W 2052NC400 153
W 2054NC360 153
W 2054NC450 153
W 2058LC020 153
W 2058LC100 153
W 2058LC120 153
W 2134NC300 154
W 2134NC400 154
W 2416NC160 154
W 2416NC200 154
W 2416NC250 154
W 2624NC160 154
W 2624NC200 154
W 2624NC250 154
W 2664NC300 154
W 2664NC400 154
W 2820VC360 154
W 2820VC450 154
W 2820VF360 154
W 2820VF450 154
W 2958NC280 154
W 2958NC350 154
W 3128VC300 154
W 3128VC400 154
W 3128VF300 154
W 3128VF400 154
W 3270NC080 154
W 3270NC160 154
W 3270NC200 154
W 3697VC160 154
W 3697VC220 154
W 3697VC280 154
W 3697VF160 154
W 3697VF220 154
W 3697VF280 154
W 3743ZC400 154
W 3743ZC500 154
W 3743ZD400 154
W 3743ZD500 154
➤ W 3841VC300 154
➤ W 3841VC340 154
➤ W 3841VF300 154
➤ W 3841VF340 154
W 4096ZC340 154
W 4096ZC450 154
W 4096ZD340 154
W 4096ZD450 154
W 4307ZC200 154
W 4307ZC240 154
W 4307ZC300 154
W 4307ZD200 154
W 4307ZD240 154
W 4307ZD300 154
W 4534NC020 154
W 4534NC060 154
W 5092ZC240 154
W 5092ZC280 154
W 5092ZC350 154
W 5092ZD240 154
W 5092ZD280 154
W 5092ZD350 154
W 5282ZC200 155
W 5282ZC240 155
W 5282ZC300 155
W 5282ZD200 155
W 5282ZD240 155
W 5282ZD300 155
➤ W 5292TC500 155
➤ W 5292TC560 155
➤ W 5292TD500 155
➤ W 5292TD560 155
W 5439VC020 155
W 5439VC100 155
W 5439VC140 155
W 5439VF020 155
W 5439VF100 155
W 5439VF140 155
W 5696VC020 155
W 5696VC100 155
W 5696VC140 155
W 5696VF020 155
W 5696VF100 155
W 5696VF140 155
W 5838ZC120 155
W 5838ZC180 155
W 5838ZC220 155
W 5838ZD120 155
W 5838ZD180 155
W 5838ZD220 155
W 6262ZC120 155
W 6262ZC200 155
W 6262ZC240 155
W 6262ZD120 155
W 6262ZD200 155
W 6262ZD240 155
W 7675ZC020 155
W 7675ZC100 155
W 7675ZC140 155
W 7675ZD020 155
W 7675ZD100 155
W 7675ZD140 155
W 8405ZC020 155
W 8405ZC100 155
W 8405ZC140 155
W 8405ZD020 155
W 8405ZD100 155
W 8405ZD140 155

Y

Y 2002KC250 179
Y 5002NC250 179
Y 8002VC450 179

IGBT and MOSFET Discrete

IXGK 60N60B2D1 **(Example)**

IX IXYS

Die technology

- **B** High voltage BIMOSFET
- D NPT-IGBT with SCSOA capability
- E NPT³ IGBT
- F HiPerFET™ Power MOSFET
- G Fast IGBT
- K CoolMOS
- L IGBT with SCSOA capability
- S IGBT with SCSOA capability
- T Standard Power MOSFET
- U Trench MOSFET

Housing type

- **A** TO-263 (D² PAK)
- B PLUS 264 (TO-264 without mounting hole)
- C ISOPLUS220 (TO-220 DCB isolated)
- E ISOPLUS227 (DCB isolated miniBLOC)
- F ISOPLUS-i4 (DCB isolated)
- H TO-247
- J TO-268 (I3 PAK)
- K TO-264
- L ISOPLUS 264 (TO-264 DCB isolated)
- M TO-204 (TO-3)
- N SOT-227 B (miniBLOC)
- P TO-220
- Q TO-3P
- R ISOPLUS 247 (TO-247 DCB isolated)
- T TO-268 (D³ PAK)
- U TO-251 (D PAK)
- V PLUS 220 (TO-220 footprint without mounting hole)
- X PLUS 247 (TO-247 without mounting hole)

50 Current rating, 50 = 50 A
MOSFET = value at T_C = 25°C
IGBT = value at T_C = 90°C

- **N** N-channel type
- P P-channel type

60 Voltage class, 60 = 600 V

xx

MOSFET

- A Prime $R_{DS(on)}$ for standard MOSFET
- Q Low gate charge die
- Q2 Low gate charge die, 2nd generation
- P PolarHT™ Power MOSFET
- L Linear Mode MOSFET

IGBT

- -- No letter, low $V_{CE(sat)}$
- A Or A2, std speed type
- B Or B2, high speed type
- C Or C2, very high speed type

xx

- D Integrated HiPerFRED™ diode
- H Integrated SONIC-FRD™ diode
- U Integrated FRED diode
- 1 Antiparallel diode (free wheeling diode)
- 2 Diode in boost configuration
- 3 Diode in buck configuration

IGBT and MOSFET Modules

MII 200-12A4 **(Example)**

- **F** ISOPLUS-I4
- M Module
- V Module

- **C** Thyristor
- D Diode
- I IGBT with SCSOA capability
- M MOSFET
- W Three phase bridge
- U Uncontrolled 3 phase input rectifier

- **C** Thyristor
- D Diode
- I IGBT with SCSOA capability
- K Common cathode
- M MOSFET
- O No meaning. Reserved for future function
- BW Brake chopper and IGBT sixpack

200 Current rating 200 = 200 A

-12 Voltage class, 12 = 1200 V

- **A** Version A
- E NPT³ IGBT
- F HiPerFET, MOSFET, n-channel
- G Low $V_{CE(sat)}$ type, IGBT
- K CoolMOS
- S High speed type, IGBT
- T Standard MOSFET, n-channel or Trench IGBT

- **4** Version 4
- 6 Version CBI 1
- 7 Version CBI 2
- 8 Version CBI 3
- 9 E+ Package
- 10 High Power Module
- 11 High Power Module with enlarged clearance and creepage distance

T NTC temperature sensor

CAPSULE DEVICES

W	0646	W	C	15	0	(Sample)

Device Type

W	Rectifier diode
M	Fast/soft recovery diode
F	Extra fast diode
E	HP Sonic-FRD™
N	Phase control thyristor
R	Distributed gate thyristor
P	Fast turn-off thyristor
K	Medium voltage thyristor
A	Asymmetric thyristor
T	Press-Pack IGBT capsule
S	Symmetrical Gate Turn-off thyristor
H	Fast Symmetrical Gate Turn-off thyristors
G	Anode Short Gate Turn-off thyristors

0646 ***Device nominal current rating***

Pole face Diameter

W	19mm
Y	25.1mm
K	29mm (GTO Only)
J	32mm
L	34mm
Q	38mm
D	44.4mm
N	47mm
M	59mm
V	63mm
H	68mm
Z	73.1mm
T	75mm
E	85mm
F	99.3mm
G	125mm

Housing Type

C	Standard outline
D	Slim pack (63mm-73.1mm pole face only), Thick pack (75mm pole face)
F	Slim pack 34mm pole face = 19.5mm height, 63mm pole face = 26mm height
H	Slim pack (14mm) for 47mm pole face diode. Thick pack (26mm) for 25.1mm pole face diode)
J	Slim pack (19.5mm) for 47mm pole face thyristor)
S	Standard < 3kV pole face Y, L, N
T	C' housing explosion rated
V	D' housing explosion rated
W	F' housing explosion rated
Y	C' housing extended explosion rating
A	Round IGBT capsule
L	34mm and 47mm pole face, 26mm height GTO capsule

15 ***Voltage grade*** **= $V_{RRM}/V_{DRM} \div 100$**

0 ***tq code*** *or* ***V_{RRM} % of V_{DRM} for GTO thyristors,*** *or* ***for Press-Pack IGBTs***

tq Code			
0	No code		
A	10	M	70
B	12	N	100
C	15	P	120
D	20	R	140
E	25	S	160
F	30	T	200
G	35	V	250
H	40	W	300
J	50	X	400
K	60	Y	500
L	65	Z	1000

V_{RRM} % of V_{DRM} for GTO's	
0	100
D	80
Y	100V

For IGBT's with……	
A	Fully-rated diode
E	No diode

STUD DEVICES

W	0508	S	A	04	0	(Sample)

Device type

W	Rectifier diode
M	Fast/soft recovery diode
N	Phase control thyristor
P	Fast turn-off thyristor

0508 — **Device nominal current rating**

Polarity

S	**Normal**
R	Reverse (diode only)

Package

A	**3/4" stud with lead**
B	Leaded package
C	3/4" stud with lead
D	Ceramic Leaded package
E	3/4" HV ceramic stud with lug
F	3/4" HV ceramic stud
G	3/4" ceramic stud with lug
H	1/2" stud with lead
J	1/2" stud with flag
K	M12 ceramic stud
L	M12 stud with lug
M	3/8" stud with lead
S	60mm² square base
T	3/4" metal stud with lead

15 — ***Voltage grade*** **= $V_{RRM}/V_{DRM} \div 100$**

tq code

0	**No code**
A	10
B	12
C	15
D	20
E	25
F	30
G	35
H	40
J	50
K	60
L	65
M	70
N	100
P	120
R	140
S	160
T	200
V	250
W	300
X	400
Y	500
Z	1000

PULSE THYRISTOR CAPSULE DEVICES

Y	2002	K	C	25	0

Device type

Y	Pulse Thyristor

Device pulse current rating

2002 — Eg. 200×10^2

Pole face Diameter

K	29mm
N	47mm
V	63mm

Standard housing

C

25 — *Voltage grade = $V_{RRM}/V_{DRM} \div 100$*

0 — *No code*

DE Linear and Switch Mode Series

The patented DE-SERIES Fast Power™ MOSFETs are in a new class of unique high power transistors designed as a circuit element from the ground up for high speed, high frequency, high power applications at frequencies up to 100 MHz. DEI's Fast Power™ technology features low insertion inductance (≤ 1.5 nH), and a low profile package, with $R_{(theta)JHS}$ as low as 0.17ºC/W, which provides exceptional switching speeds and power handling capabilities. The DE-Series MOSFETs offer 10 times the speed and 3 times the thermal dissipation, with $^1/_2$ the volume, $^1/_3$ the weight and greatly reduced die stress, of comparable conventional power MOSFET devices.

Features

- Isolated Substrate
  - high isolation voltage (> 2500 V)
  - excellent thermal transfer
  - increased temperature and power cycling capability
- IXYS advanced low Q_g process
- Low gate charge and capacitances
  - easier to drive
  - faster switching
- Low $R_{DS(on)}$
- Very low insertion inductance (≤ 1.5 nH)

Advantages

- Optimized for RF and high speed switching at frequencies to 175 MHz
- Higher voltages - lower DC current requirements, higher load impedances, reduced system size and weight, simplifies paralleling of devices
- Easy to mount - no insulators needed
- High power density

Applications

- RF Power Amplifiers
- High Frequency SMPS
- Laser Diode Drivers
- RF Power Generators
- Induction Heating
- High Speed Pulse Generators

Linear Z-MOS

Part Number ➤ New	Configuration	B_{VDSS}	I_d A	Gain 175 MHz dB	Pout 175 MHz W	Pd W	Fig. No.
100V (operating) Linear RF MOSFETS							
IXZ210N50L	SINGLE	500	10	14	300	550	D2
IXZ2210N50L	PUSH-PULL		10X2	14	550	1080	D3
➤ IXZ12210N50L-754	PUSH-PULL		10X2	14	550	1080	754
IXZH10N50LA	SINGLE G-S-D		9	14	150	180	X016a
IXZH10N50LB	SINGLE D-S-G		9	14	150	180	X016a*
50V (operating) Linear RF MOSFETS							
IXZ215N12L	SINGLE	125	15	13	150	300	D2

Package Style
Outlines page 188 - 224

D2 **DE 275**
Weight = 2 g

D3 **DE 275x2**
Weight = 4 g

D4 **DE 375**
Weight = 3 g

X014 **TO-247 AD**
Weight = 6 g

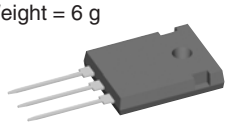

X016a **ISOPLUS247™**
Weight = 5 g

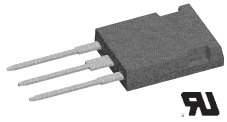

X016a*
D/G are pin swarped

Switch Mode Z-MOS FETs

Part Number ➤ New	Configuration	BV_{DSS}	I_D A	$R_{DS(on)}$ Ω	tr ns	Ciss pF	Coss pF	Crss	Pd	Fig.
➤ IXZ211N50	SINGLE	500	11	0.6	4	790	78	12	540	D2
➤ IXZ2211N50	PUSH-PULL		11X2	0.6		790	78	12	1030	D3
IXZ318N50	SINGLE		19	0.325		1960	139	19	880	D4
➤ IXZH18N50	SINGLE		19	0.325		1960	139	19	300	X014a
➤ IXZR18N50	SINGLE		19	0.325		1960	139	19	300	X016a
IXZR18N50A	SINGLE G-S-D		19	0.325		1960	139	19	300	X016a
IXZR18N50B	SINGLE D-S-G		19	0.325		1960	139	19	300	X016a*
IXZ316N60	SINGLE	600	18	0.44	4	1930	125	17.8	880	D4
➤ IXZH16N60	SINGLE		18	0.44					300	X014a
➤ IXZR16N60	SINGLE		18	0.44					300	X016a
IXZR16N60A	SINGLE G-S-D		18	0.44					300	X016a
IXZR16N60B	SINGLE D-S-G		18	0.44					300	X016a*
IXZ308N120	SINGLE	1200	8	2.1	5	1960	59	9.2	880	D4
➤ IXZH08N120	SINGLE		8	2.1					300	X014a
➤ IXZR08N120	SINGLE		8	2.1					300	X016a
IXZR08N120A	SINGLE G-S-D		8	2.1					300	X016a
IXZR08N120B	SINGLE D-S-G		8	2.1					300	X016a*

RF MOSFET Gate Driver IC

IXYS RF

The DEIC 420 ultra-fast high current driver is optimized to drive DEI DE-Series MOSFETs for high efficiency performance in RF generators, laser diode drivers, pulse generators, and high frequency power conversion applications. It is designed to switch power MOSFETs with minimum switching times at frequencies to 45 MHz. The innovative DEIC 420 is manufactured in DEI's patented low-inductance RF package, offering superior thermal performance and high continuous operating frequencies.

Features

- Wide operating voltage range from 8 V to 30 V
- Very low output impedance
- No internal cross conduction which allows operating frequencies to 45 MHz
- Latch-up protected to rated reverse current
- Output Current - up to 20 A peak
- Very low thermal impedance
- Matched rise and fall times
- Evaluation Board available

Applications

- Class D and E RF Generators
- Laser Diode Drivers
- High Frequency Power Factor Correction
- Acoustic Transducer Drivers
- High Frequency SMPS
- Pulse Generators

Fig. D1
DE 150

Fig. D2
DE 275

X550
28-pin SOP

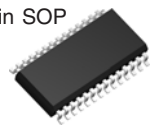

MOSFET Driver ICs

➤ Part Number New	Configu-ration	Peak I A	Zout Ω	Package	PD W	Enable Pin	Kelvin Input	Evaluation Board
DEIC420	SINGLE	20	0,6	DE275	100	NO	NO	EVIC420
➤ **DEIC421**	SINGLE	20	0,6	DE275-IC	100	NO	YES	
➤ **DEIC515**	SINGLE	15	0,6	DE150-IC	100	NO	YES	
IXDD415SI	DUAL	15	0,8	SOIC-28 w/ heat slug	12	YES	YES	EVDD415

Outline drawings
see pages 188-224

Laser Diode Driver IC

Part Number	Pulse Width	Max Freq.	Peak I A	Package	Evaluation Board
IXLD02SI	1.5nS to >1µS	17MHz	2	SOIC-28 w/heat slug	EVLD02

GaAs Schottky Diodes

Part type	V_{RRM} V	If(25) A	Cjunction Pf	VF(IF=24) Pf	PTOT(25) W	R_{THJC} K/W	Package
GS150TA_25104	250	4Ax3	9	1,5	9	16,3	DE150
GS150TC_25104	250	4Ax3	9	1,5	9	16,3	DE150
GS150TI_25104	250	4Ax3	9	1,5	9	16,3	DE150
GS150TA_25110	250	10Ax3	18	1,5	15	9,6	DE150
GS150TC_25110	250	10Ax3	18	1,5	15	9,6	DE150
GS150TI_25110	250	10Ax3	18	1,5	15	9,6	DE150
GS150TC_25120	250	20Ax3	36	1,5	20	7,2	DE150
GS08DI25104	250	1AX2	9	1,5	1	125	SOIC8

IXYS RF

DE Series (DE Package)

Part Number	Configuration	B_{VDSS} V	ID A	$R_{DS(ON)}$ Ω	$T_{R(ON)}$ ns	C_{ISS} pF	C_{OSS} pF	C_{RSS} pF	PD W	Fig. No.
100V (max) Switch Mode MOSFETS										
DE150-101N09A	SINGLE	100	9	0.16	4	800	200	30	200	D1
DE275-101N30A	SINGLE		30	0.05	5	2500	500	100	270	D2
200V (max) Switch Mode MOSFETS										
DE150-201N09A	SINGLE	200	15	0.2	4	700	150	20	200	D1
DE275-201N25A	SINGLE		25	0.08	5	2500	250	50	590	D2
500V (max) Switch Mode MOSFETS										
DE150-501N04A	SINGLE	500	4.5	1.5	4	700	90	5	200	D1
DE275-501N16A	SINGLE		16	0.4	2	1800	150	40	590	D2
DE275X2-501N16A	PUSH-PULL		16	0.38	2	1800	150	45	1180	D3
DE375-501N21A	SINGLE		25	0.22	3	2000	200	45	940	D4
DE475-501N44A	SINGLE		44	0.11	5	5500	230	130	1800	D5
1000V (max) Switch Mode MOSFETS										
DE150-102N02A	SINGLE	1000	2	7.8	4	500	150	3	200	D1
DE275-102N06A	SINGLE		8	1.6	2	1800	130	25	590	D2
DE275X2-102N06A	PUSH-PULL		16	1.6	2	1800	130	25	1180	D3
DE375-102N10A	SINGLE		10	1.2	3	2900	100	25	940	D4
DE375-102N12A	SINGLE		12	0.95	3	2000	150	30	940	D4
DE475-102N20A	SINGLE		20	0.6	5	5600	175	50	1800	D5
DE475-102N21A	SINGLE		24	0.41	5	5500	200	60	1800	D5

Package style
Outline drawings on page 188 - 224

D1 Weight = 2 g **DE 150**

D2 Weight = 2 g **DE 275**

D3 Weight = 4 g **DE 275x2**

D4 Weight = 3 g **DE 375**

D5 Weight = 3 g **DE 475**

X014a Weight = 6 g **TO-247 AD**

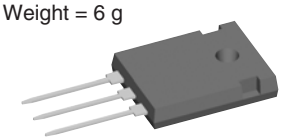

X015 Weight = 5 g **PLUS247**

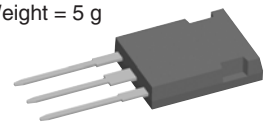

X016a Weight = 5 g **ISOPLUS247™**

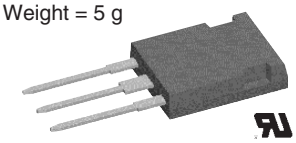

X019 Weight = 4 g **TO-268AA**

X020 Weight = 10 g **TO-264**

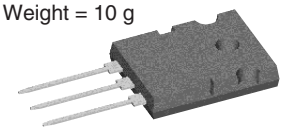

X027a Weight = 30 g **SOT-227B miniBLOC**

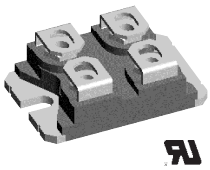

F Series (Industry Standard Packages)

Part Number	Configuration	B_{VDSS} V	ID A	$R_{DS(ON)}$ Ω	$T_{R(ON)}$ ns	C_{ISS} pF	C_{OSS} pF	C_{RSS} pF	PD W	Fig. No.
200V (max) Switch Mode MOSFETS										
IXFH60N20F	SINGLE	200	60	0.038	14	2930	940	320	315	X014a
IXFT60N20F	SINGLE	200	60	0.038	14	2930	940	320	315	X019
500V (max) Switch Mode MOSFETS										
IXFH12N50F	SINGLE	500	12	0.4	14	1870	290	90	180	X014a
IXFT12N50F	SINGLE	500	12	0.4	14	1870	290	90	180	X019
IXFH21N50F	SINGLE	500	21	0.25	12	2600	470	160	300	X014a
IXFT21N50F	SINGLE	500	21	0.25	12	2600	470	160	300	X019
IXFH28N50F	SINGLE	500	28	0.19	13	3000	500	130	315	X014a
IXFT28N50F	SINGLE	500	28	0.19	13	3000	500	130	315	X019
IXFK44N50F	SINGLE	500	44	0.12	18	5500	990	330	500	X020
IXFX44N50F	SINGLE	500	44	0.12	18	5500	990	330	500	X015
IXFK55N50F	SINGLE	500	55	0.085	20	6700	1250	330	560	X020
IXFN55N50F	SINGLE	500	55	0.085	20	6700	1250	330	600	X027b
IXFX55N50F	SINGLE	500	55	0.085	20	6700	1250	330	560	X015
1000V (max) Switch Mode MOSFETS										
IXFH6N100F	SINGLE	1000	6	1.9	14	1870	190	60	180	X014a
IXFT6N100F	SINGLE	1000	6	1.9	14	1870	190	60	180	X019
IXFH12N100F	SINGLE	1000	12	1.05	12	2700	305	93	300	X014a
IXFR12N100F	SINGLE	1000	12	1.05	12	2700	305	93	300	X016a
IXFT12N100F	SINGLE	1000	12	1.05	12	2700	305	93	300	X014a
IXFK21N100F	SINGLE	1000	21	0.5	16	5500	640	190	500	X020
IXFX21N100F	SINGLE	1000	21	0.5	16	5500	640	190	500	X015
IXFK24N100F	SINGLE	1000	24	0.39	18	6600	760	230	560	X020
IXFN24N100F	SINGLE	1000	24	0.39	18	6600	760	230	600	X020
IXFX24N100F	SINGLE	1000	24	0.39	18	6600	760	230	560	X015

Hybrid Microwave Modules

MicroWave Technology

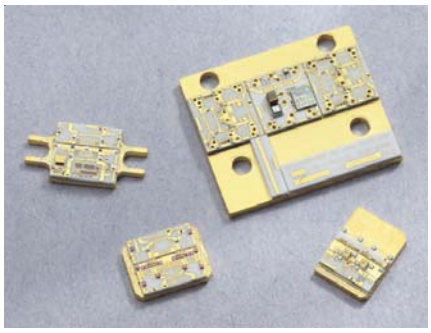

- Miniature, Low Cost for Drop In Hybrid Applications
- Low Noise, High Gain, and High Power Options
- Gain Block, Temp Comp, and Regulator Options
- Low VSWR for Improved Cascade Performance
- Single Voltage Supply and Low Current Design
- Using MwT's Space-Qualified GaAs and Thin Film Substrates
- 100% Eutectic Assembly Technique Assure High Reliability
- Standard and Customer Specific Specifications
- Connectorized Amplifier Options Upon Request
- High-Rel and Space-Rel Screening Available

MwT Standard Gain Block Modules

Model ➤ New	Freq Range GHz	Linear Gain Typ/Min dB	Gain ± Flatness Typ/Max dB	VSWR : 1 In & Out Typ/Max dB	Reverse Isolation Typ dB	Noise Figure Typ dB	Pout @ -1 dB Typ/Min dBm	IP3 Typ	Current @ +8 V Typ/Max mA	Case Code	Carrier Size mil x mil
MwT 0206-1G1	2.0-6.0	16.0 / 15.0	0.6 / 0.6	1.8 / 2.0	-30.0	4.5	17.0 / 16.0	27.0	150 / 180	U/L-1	300 • 600
MwT 0206-1G2	2.0-6.0	18.0 / 17.0	0.5 / 0.6	1.8 / 2.0	-30.0	3.5	19.0 / 18.0	29.0	150 / 200	U/L-1	300 • 600
MwT 0206-2P2	2.0-6.0	10.5 / 10.0	0.4 / 0.6	1.5 / 1.8	-20.0	4.5	24.5 / 24.0	35.0	220 / 260	S/Z-1	300 • 600
MwT 0206-7G2	2.0-6.0	11.0 / 10.5	0.4 / 0.6	1.5 / 1.8	-20.0	3.0	15.0 / 14.0	25.0	60 / 80	S/Z-1	300 • 600
MwT 0206-9P2	2.0-6.0	11.0 / 10.0	0.4 / 0.6	1.7 / 2.0	-20.0	4.0	26.0 / 25.0	37.0	260 / 290	S/Z-1	300 • 600
MwT 0206-11P2	2.0-6.0	6.0 / 5.0	0.4 / 0.6	1.7 / 2.0	-18.0	7.0	30.0 / 29.5	41.0	850 / 950	S/Z-1	300 • 600
➤ MwT 0206-A9G1	2.0-6.0	17.0 / 16.0	0.5 / 0.6	1.8 / 2.0	-30.0	1.5	15.0 / 14.0	25.0	50 / 55	S/Z-1	300 • 600
MwT 0618-2P1	6.0-18.0	5.0 / 4.5	0.4 / 0.6	1.5 / 1.7	-20.0	7.0	24.8 / 24.0	35.0	200 / 250	S/Z-2	250 • 500
MwT 0618-2P2	6.0-18.0	5.5 / 5.0	0.3 / 0.5	1.5 / 1.7	-20.0	7.0	25.5 / 24.5	36.0	220 / 275	S/Z-2	250 • 500
MwT 0618-3P1	6.0-18.0	6.0 / 5.0	0.4 / 0.6	1.5 / 1.7	-20.0	6.5	20.5 / 20.0	30.0	100 / 120	S/Z-2	250 • 500
MwT 0618-3P2	6.0-18.0	6.5 / 6.0	0.3 / 0.5	1.5 / 1.7	-20.0	6.5	21.5 / 21.0	31.0	100 / 120	S/Z-2	250 • 500
MwT 0618-4N1	6.0-18.0	7.5 / 7.0	0.4 / 0.6	1.5 / 1.7	-20.0	4.5	14.0 / 12.0	25.0	40 / 60	S/Z-2	250 • 500
MwT 0618-4N2	6.0-18.0	8.0 / 7.5	0.4 / 0.6	1.5 / 1.7	-20.0	4.0	14.0 / 11.0	25.0	40 / 60	S/Z-2	250 • 500
MwT 0618-H4N2	6.0-18.0	9.0 / 8.5	0.4 / 0.6	1.5 / 1.7	-20.0	3.0	10.0 / 7.0	20.0	40 / 60	S/Z-2	250 • 500
MwT 0618-5G1	6.0-18.0	10.0 / 9.5	0.4 / 0.6	1.5 / 1.7	-30.0	5.5	16.0 / 14.0	26.0	90 / 100	S/Z-2	250 • 500
MwT 0618-5G2	6.0-18.0	10.5 / 10.0	0.4 / 0.6	1.5 / 1.7	-30.0	5.0	18.0 / 15.5	28.0	100 / 120	S/Z-2	250 • 500
MwT 0618-7G2	6.0-18.0	7.5 / 7.0	0.4 / 0.6	1.5 / 1.7	-20.0	5.0	15.0 / 14.0	25.0	60 / 80	S/Z-2	250 • 500
MwT 0618-12P2	6.0-18.0	4.6 / 4.2	0.4 / 0.6	1.5 / 1.7	-20.0	7.5	27.5 / 27.0	38.0	350 / 450	S/Z-2	250 • 500
➤ MwT 0618-H15P2	6.0-18.0	8.5 / 7.5	0.4 / 0.6	1.5 / 1.7	-20.0	7.5	27.0 / 26.0	34.0	250 / 275	S/Z-2	250 • 500
➤ MwT 0618-H15P3	6.0-18.0	7.5 / 6.5	0.4 / 0.6	1.5 / 1.7	-20.0	7.5	29.0 / 28.0	36.0	250 / 300	S/Z-2	250 • 500
➤ MwT 0618-H16P3	6.0-18.0	5.0 / 6.0	0.8 / 1.2	1.7 / 2.0	-17.0	8.0	30.0 / 29.0	38.0	450 / 550	S/Z-2	250 • 500
➤ MwT 0618-H7P2	6.0-18.0	9.0 / 9.5	0.5 / 1.0	1.7 / 2.0	-17.0	5.5	21.0 / 24.0	33.0	110 / 150	S/Z-2	250 • 500
MwT 0820-3P1	8.0-20.0	5.0 / 4.5	0.4 / 0.6	1.5 / 1.7	-20.0	7.5	19.0 / 18.0	29.0	100 / 120	S/Z-2	250 • 500
MwT 0820-3P2	8.0-20.0	5.5 / 5.0	0.4 / 0.6	1.5 / 1.7	-20.0	7.0	20.0 / 19.0	29.0	100 / 120	S/Z-2	250 • 500
MwT 0820-4N1	8.0-20.0	6.0 / 5.5	0.4 / 0.6	1.5 / 1.7	-20.0	8.0	14.0 / 12.0	25.0	40 / 60	S/Z-2	250 • 500
MwT 0820-4N2	8.0-20.0	6.5 / 6.0	0.4 / 0.6	1.5 / 1.7	-20.0	4.0	14.0 / 11.0	25.0	40 / 60	S/Z-2	250 • 500
MwT 0820-5G1	8.0-20.0	9.0 / 8.0	0.4 / 0.6	1.5 / 1.7	-28.0	4.0	16.0 / 14.0	26.0	90 / 110	S/Z-2	250 • 500
MwT 0218-4N1	2.0-18.0	6.0 / 5.0	0.8	1.7 / 2.0	-20.0	7.0	15.0 / 14.0	25.0	100 / 120	S/Z-2	250 • 500
MwT 0218-4N2	2.0-18.0	6.5 / 6.0	1.2	1.7 / 2.0	-20.0	8.5	17.0 / 16.0	26.0	160 / 180	S/Z-2	250 • 500
MwT 0218-H4N1	2.0-18.0	12.0 / 11.0	0.8	1.7 / 2.0	-20.0	4.0	6.0 / 5.0	15.0	40 / 50	S/Z-2	250 • 500
➤ MwT 0218-H4N2	2.0-18.0	11.0 / 10.0	0.8	1.7 / 2.0	-20.0	4.0	12.0 / 11.0	24.0	60 / 75	S/Z-2	250 • 500

Note: Typical 2nd Harmonics @ P-I -21.0 dBc Typ

MwT Standard Temperature Compensation Modules

Model	Freq Range GHz	Insertion Loss Typ/Max dB	Loss Flatness ± Max dB	Atten. Typ / Min dB	Current @ +8 V Max mA	Case Code	Carrier Size milxmil
MwT 0206-TCM	2.0-6.0	1.0 / 2.5	0.4 / 0.6	13.0 / 12.0	10 / 20	S/Z-1	300 • 600
MwT 0618-TCM	6.0-18.0	2.5 / 3.0	0.4 / 0.6	13.0 / 12.0	10 / 20	S/Z-2	250 • 500

MwT Standard Voltage Regulator Modules (Each Module Contains Dual Adjustable Voltage Regulators)

Model	Freq Range GHz	Insertion Loss Typ/Max dB	Ripple Rej @ 120Hz Min dB	Pw Diss Per VR Max Watts	Regulated Voltage Min / Max V	Supply Voltage Typ / Max V	Total Sup. Current Max mA	Case Code	Carrier Size milxmil
MwT 0206-VRM	2.0-6.0	- / 0.5	50.0	1.5	7.9 / 8.1	12.0 / 20.0	800	U/L-1	300 • 600
MwT 0618-VRM	6.0-18.0	- / 1.0	50.0	1.5	7.9 / 8.1	12.0 / 20.0	800	U/L-2	250 • 500

Standard Amplifier Selection Guide

MicroWave Technology

Model Number WideBand Amplifier Type	Freq Range GHz	Linear Gain dB MIN/TYP	Gain Flatness ±dB MAX	Noise Figure dB MAX/TYP	Pout-1dB dBm MIN/TYP	Current @12 V mA MAX	Case Code
AW052202N	0.5-2	30/33	1-4	2.5/2.2	15/17	300	SL-2
AW052203	0.5-2	23/26	1.0	3.0/2.5	17/19	260	SL-2
AW054201N	0.5-4	19/26	1.0	2.5/2.2	15/17	220	SL-2
AW054203	0.5-4	21/24	1.0	4.5/4.0	16/18	260	SL-2
AW12201N	1-2	28/31	1-1	2.5/2.2	18/20	225	SL-2
AW12203	1-2	27/30	1-1	3.5/3.0	27/28	555	SL-2
AW26201N	2-6	21/23	1.0	2.5/2.2	13/15	155	SL-2
AW26204	2-6	19/21	1.0	4.5/4.0	23/24	335	SL-2
AW28201N	2-8	29/32	1-5	3.0/2.5	13/15	175	SL-2
AW28302	2-8	31/33	1-5	5.5/5.0	23/24	615	SL-3
AW612301N	6-12	30/32	1.0	3.5/3.0	16/17	240	SH-3
AW612304	6-12	22/23	1.0	6.5/6.0	27/28	750	SH-4
AW1218301N	12-18	24/26	0.8	3.5/3.0	14/15	230	SH-3
AW1218504	12-18	29/31	1-3	7.5/7.0	27/28	1200	SH-6
AW818301N	8-18	24/26	1.0	3.5/3.0	14/15	230	SH-3
AW818504	8-18	29/32	1-5	7.5/7.0	27/28	1300	SH-6
AW618301N	6-18	24/26	1-3	3.5/3.0	14/15	230	SH-3
AW618302	6-18	19/21	1-3	6.0/5.5	20/21	350	SH-3
AW618404	6-18	20/22	1-5	7.5/7.0	27/28	1200	SH-5
AW218201N	2-18	25/28	1-8	5.0/4.5	6/7	135	SH-2
AW218301N	2-18	24/26	2.0	6.5/6.0	15/16	365	SH-3
AW218301	2-18	20/22	2.0	6.0/5.5	20/21	500	SH-3
Model Number Temp Comp Amplifier Type	**Freq Range GHz**	**Linear Gain dB MIN/TYP**	**Gain Flatness ±dB MAX**	**Noise Figure dB MAX/TYP**	**Gain vs Temp ±dB MAX**	**Current @12 V mA MAX**	**Case Code**
AT26301	2-6	21/23	1.0	6.0/5.5	0.8	300	SL-3
AT26401	2-6	36/40	1.5	5.5/5.0	1.0	470	SL-4
AT618401	6-18	22/24	1.0	7.5/7.0	0.8	380	SH-4
AT618501	6-18	31/33	1.3	7.0/6.5	0.8	500	SH-5
Model Number Limiting Amplifier Type	**Freq Range GHz**	**Pin Dynamic dBm MIN/MAX**	**Noise Power dBm MAX**	**Pout-sat dBm MIN/MAX**	**Pout Flatness ±dB MAX**	**Current @12 V mA MAX**	**Case Code**
AL26501	2-6	-50/10	7.0	+15/+20	1.0	500	SL-5
AL618801	6-18	-50/10	10.0	+15/+20	2.0	800	LH-44
Model Number Low Noise Amplifier Type	**Freq Range GHz**	**Linear Gain dB MIN**	**Gain Flatness ±dB MAX**	**Noise Figure dB MAX/TYP**	**Pout-1dB dBm MIN/TYP**	**Current @12 V mA MAX**	**Case Code**
AN12201N	1.2-1.8	28/31	0.5	1-7	15/17	180	CL-1
AN23201N	2.2-2.9	28/31	0.5	1-7	15/17	180	CL-1
AN45201N	4.4-5.0	25/27	0.5	1-7	15/17	180	CL-1
AN78201N	7.2-7.8	23/25	0.5	1-8	14/16	150	CH-1
AN910201N	9.0-10.0	21/23	0.5	1-8	14/16	150	CH-1
AN1415301N	14.5-15.3	24/27	0.5	2-1	13/15	200	CH-3
AN1718401N	17.7-18.7	29/32	1.0	2-8	12/14	250	CH-3
Model Number Med Power Amplifier Type	**Freq Range GHz**	**Linear Gain dB MIN**	**Gain Flatness ±dB MAX**	**VSWR In/Out MAX**	**Pout-1dB dBm MIN/TYP**	**Current @12 V mA MAX**	**Case Code**
AP45401	4.4-5.0	35.0	0.6	1.5/1.5	30.0/30.5	1400	CL-3
AP67402	5.9-6.4	33.0	0.6	1.5/1.5	33.0/33.5	2700	CL-3
AP78401	7.2-8.4	33.0	0.8	1.5/1.5	30.0/30.5	1450	CH-3
AP910401	9.0-10.0	32.0	0.8	1.5/1.5	30.0/30.5	1450	CH-3
AP1011401	10.7-11.7	27.0	0.8	1.5/1.5	30.0/30.5	1550	CH-3
AP1415401	14.0-14.5	23.0	0.5	1.5/1.5	29.0/30.0	1700	CH-3
AP1718501	17.7-18.7	24.0	1.0	1.8/1.8	26.0/27.0	1250	CH-5
Model Number Telecom Power Amplifier Type	**Freq Range GHz**	**Linear Gain dB MIN**	**Gain Flatness ±dB MAX**	**IMD3 (dBc) @ Po dBm/Tone**	**Pout-1dB dBm MIN/TYP**	**Current @12 V mA MAX**	**Case Code**
AP1819701	18.1-18.6	30	0.5	-50@+15	27	2300	PH-01
AP1819801	18.1-18.6	35	0.5	-54@+15	29	2700	PH-01

Contact factory for application assistance on custom and standard amplifiers. High-Rel and Space-Rel screening available.

GaAs FETs / PHEMTs

- Ultra Linear, High Dynamic Range, Low Phase Noise
- GaAs Process is Approved for Space Applications with Proven Reliability
- Commercial, Industrial, Military, and Space Grades
- 100% Wafer Bond Pull, Die Shear, Wafer DC Burn In, and Bake Tests in Evaluation per mil-PRF 385 & 4
- 100% Die Probe Test with Data Recorded for Shipment
- 100% Visual (Perform Level 1, 3, or 4) before Shipment
- 100% Idss Match to Provide Performance Consistency
- RF Sample Test Capability Available Upon Request
- Meet Standard or Customer Specific Specifications
- High-Rel and Space-Rel Screening Options Available
- RoH5 (lead-free) compliant product available

MwT Standard GaAs FETs / PHEMTs RF Properties (DC Properties Listed on 2nd Page)

Model ➤ New	Package Available Sealed / Hermetic	Gate Width / Length um	Gate Layout Method	Gate Drain Source Bond Pads Qty	Chip Thick-ness & VIA mil, y/n	S.S. Gain @12GHz Typ/Min dB	N. F. @12GHz Typ/Max dB	Ga @ N.F @12GHz Typ/Min dB	P-1dB @ 12GHz Typ/Min dBm	IP3 @ 12GHz Typ dBm	Nominal Chip Size um • um	Ideal Circuit
MwT-1	70, 73 / 71	630/0.3	single stripe	1, 1, 2	5, no	10.0 / 9.0	2.0 / -	7.0 / -	24.0/23.0	-	775 • 241	FB Amp
MwT-2	70, 73 / 71	630/0.3	single stripe	2, 2, 3	5, no	8.5 / 8.0	- / -	- / -	24.5/23.0	-	775 • 241	BA Amp
MwT-3	70, 73 / 71	300/0.3	single stripe	1, 1, 2	5, no	11.0 / 10.0	- / -	- / -	21.0/20.0	-	406 • 241	BA Amp
MwT-4	70, 73 / NA	180/0.3	single stripe	1, 1, 2	5, no	9.0 / 8.0	1.5 / 1.8	9.0 / 8.0	14.0/13.0	-	356 • 241	Osc & Amp
MwT-5	NA / NA	2•300/0.3	dual gate	3, 1, 2	5, no	13.0 / 12.0	3.5 / -	11.0 / -	19.0/15.0	-	406 • 241	Buffer Amp
MwT-6	- / 71	900/0.3	Interdigit	2, 2, 3	5, no	8.0 / 7.5	- / -	- / -	27.0/26.0	-	559 • 292	FB/DA Amp
MwT-7	70, 73 / NA	250/0.3	single stripe	2, 2, 2	5, no	10.5 / 10.0	2.0 / -	8.0 / -	20.0/18.0	-	356 • 241	BA/SE Amp
➤ MwT-8	71.0	2400/0.3	Interdigit	2, 2, 3	4, no	7.5 / 7.0	-	-	28.0 / 27.0	-	673 • 305	Power Amp
MwT-9	70, 73 / 71	750/0.3	Interdigit	1, 1, 2	5, no	9.0 / 8.0	- / -	- / -	26.0/25.0	-	419 • 292	FB Amp
➤ MwT-11	71.0	2400/0.3	Interdigit	2, 2, 3	4, no	9.0 / 7.0	-	-	30.0 / 28.0	-	775 • 343	Power Amp
MwT-15	- / -	630/0.3	single stripe	4, 2, 5	5, no	9.5 / 8.5	- / -	- / -	25.0/23.0	-	775 • 241	Amplifier
MwT-16	- / -	900/0.3	single stripe	6, 2, 7	5, no	8.5 / 7.5	- / -	- / -	27.0/26.0	-	1067 • 241	BA Amp
MwT-17	89 / 71	2400/0.8	Interdigit	4, 4, 5	5, no	7.0 / 6.0	0.8@0.9GHz	-	29.5/28.5	45/-	1130 • 279	BA/FB Amp
➤ MwT-1789HL	sot89	2400/0.8	Interdigit	4, 4, 5	4, no			14.0**	28.0	46	1130 • 279	High Linearity
➤ MwT-1789LN*	sot89	2400/0.8	Interdigit	4, 4, 5	4, no			16.0**	28.0	46	1130 • 279	Low Noise
➤ MwT-17QFN	QFN	2400/0.8	Interdigit	4, 4, 5	4, no	18.0/16.0**	1.5**	-	28.0/27.0	46	1130 • 279	Power Amp
➤ MwT-22	71.0	4800/0.5	Interdigit	6, 6, 7	4, no	12.0 / 9.0	-	-	33.0/31.0	48	1651 • 508	Power Amp
➤ MwT-22QFN	QFN	4800/0.5	Interdigit	6, 6, 7	4, no	13.5/12.0***	-	-	33.0/32.0	48	1651 • 508	Power Amp
➤ MwT-24	-	12000/0.5	Interdigit	5, 5, 6	4, no	11.0 / -	-	-	36.0/NA	48	2311 • 508	Power Amp
➤ MwT-25	-	14400/0.5	Interdigit	6, 6, 7	4, no	10.0 / 9.0	-	-	37.5/36.0	48	2757 • 508	Power Amp
MwT-A9	84, 70, 73 / 71	750/0.3	single stripe	1, 1, 2	5, no	9.5 / 8.5	1.8 / -	6.5 / 6.0	25.5/23.0	-	419 • 292	FB Amp
➤ MwT-A989SB	sot89	750/0.5	Interdigit	1, 1, 2	4, no	17.0/15.0**	0.9**	-	25.0/23.0	40	419 • 292	Power Amp
➤ MwT-H7	70, 73 / -	250/0.3	single stripe	2, 2, 2	5, no	12.0 / 11.0	2.0 / -	10.0 / -	21.5/20.0	-	356 • 241	BA Amp
➤ MwT-LP7	70, 73 / NA	250/0.3	single stripe	2, 2, 2	5, no	10.5 / 10.0	2.0 / -	8.0 / -	20.0/18.0	-	356 • 241	Oscillator
➤ MwT-PH15	70, 73 / 71	630/0.3	single stripe	3, 2, 5	4, no	12.0 / 10.0	-	-	28.5/27.0	-	775 • 241	Medium pow
➤ MwT-PH16	71	900/0.3	single stripe	6, 2, 7	4, no	11.5 / 10.0	-	-	30.0/28.5	-	1067 • 241	Medium pow
➤ MwT-PH7	70, 73 / 71	250/0.3	single stripe	2, 1, 2	4, no	13.5 / 12.0	-	-	24.0/22.0	-	356 • 241	Medium pow
➤ MwT-PH8	71	1200/0.3	Interdigit	2, 2, 3	4, no	10.0 / 9.0	-	-	30.0/29.0	-	673 • 305	Medium pow

* noise figure = 1.3dB @2.0Ghz

GaAs FETs / PHEMTs

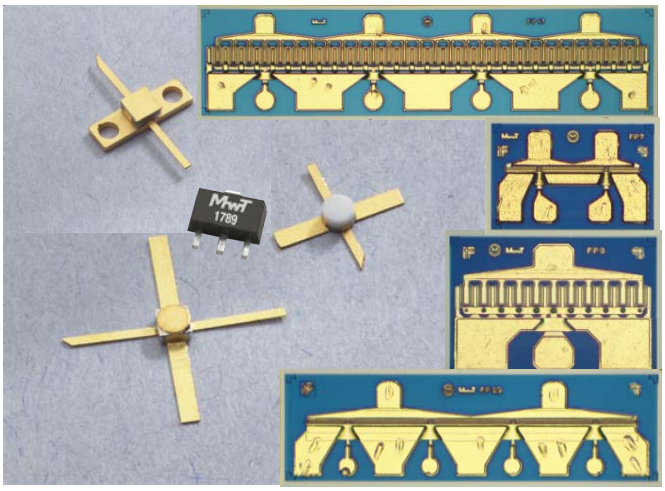

MwT Standard GaAs FETs / PHEMTs RF Properties (RF Properties Listed on First Page)

Model ➤ New	Device Type	I_{dss} Range Min/Max mA	I_{dss} Range in Each Container mA	Gm Tested at Vds/Vgs V/V	Gm Typ/Min mS	Vp Tested at Vds/Ids V/mA	Vp Typ/Max (- V)	Bvgso Tested Igs (- mA)	Bvgso Typ/Min (- V)	Bvgdo Tested at Igd (- mA)	Bvgdo Typ/Min V/V	Vds Absolute Max V	Chip Rth Typ 0C/W
MwT-1	MESFET	60 / 240	10	4.0 / 0.0	120 / 90	3.0 / 4.0	2.0 / 5.0	1.0	10.0 / 5.0	1.0	10.0 / 6.0	6.0	80
MwT-2	MESFET	60 / 240	10	4.0 / 0.0	100 / 75	3.0 / 4.0	2.0 / 5.0	0.4	12.0 / 6.0	0.4	12.0 / 8.0	7.0	80
MwT-3	MESFET	30 / 120	5	4.0 / 0.0	55 / 35	3.0 / 2.0	2.0 / 5.0	0.2	12.0 /6.0	0.2	12.0 / 8.0	7.0	150
MwT-4	MESFET	18 / 66	3	3.0 / 0.0	35 / 27	3.0 / 1.0	1.5 / 4.0	0.2	8.0 / 5.0	0.2	8.0 / 6.0	6.0	250
MwT-5	MESFET	30 / 110	5	2.0 / 0.0	40 / 23	3.0 / 0.0	2.0 / 4.5	0.4	8.0 / 5.0	0.4	10.0 / 7.0	6.5	150
MwT-6	MESFET	90 / 360	15	2.0 / 0.0	145 / 108	3.0 / 6.0	2.0 / 5.0	0.6	12.0 / 6.0	0.6	12.0 / 8.0	7.0	60
MwT-7	MESFET	26 / 98	4	3.0 / 0.0	45 / 36	3.0 / 1.0	1.5 / 4.5	0.4	8.0 / 5.0	0.4	8.0 / 6.0	6.0	180
➤ **MwT-8**	MESFET	120 / 480	20	2.5 / 0.0	160 / 144	3.0 / 5.0	2.0 / 5.0	1.2	12.0 / 8.0	1.2	12.0 / 8.0	7.5	45
MwT-9	MESFET	78 / 282	12	2.0 / 0.0	120 / 95	3.0 / 5.0	2.0 / 5.0	0.5	12.0 / 6.0	0.5	12.0 / 6.0	7.0	70
➤ **MwT-11**	MESFET	240 / 920	40	2.5 / 0.0	380 / 290	3.0 / 16.0	2.0 / 5.0	2.4	12.0 / 8.0	2.4	12.0 / 8.0	8.0	28
MwT-15	MESFET	60 / 240	10	4.0 / 0.0	100 / 75	3.0 / 4.0	2.0 / 5.0	0.4	12.0 / 6.0	0.4	12.0 / 8.0	7.0	80
MwT-16	MESFET	90 / 360	15	2.0 / 0.0	130 / 108	3.0 / 6.0	2.0 / 5.0	0.6	12.0 / 6.0	0.6	12.0 / 8.0	7.0	55
MwT-17	MESFET	240 / 920	40	2.0 / 0.0	380 / 290	3.0 / 6.0	2.5 / 5.0	1.6	12.0 / 6.0	1.6	12.0 / 8.0	7.0	33
➤ **MwT-1789HL**	MESFET	440 / 680	-	2.5 / 0.0	380	3.0 / 16.0	2.0 / 5.0	2.4	12.0 / 6.0	2.4	12.0 / 9.0	8.0	35
➤ **MwT-1789LN***	MESFET	440 / 680	-	2.5 / 0.0	380	3.0 / 16.0	2.0 / 5.0	2.4	12.0 / 6.0	2.4	12.0 / 9.0	8.0	35
➤ **MwT-17QFN**	MESFET	440 / 680	NA	2.5 / 0.0	380	3.0 / 16.0	2.0 / 5.0	2.4	12.0 / 6.0	2.4	12.0 / 9.0	8.0	35
➤ **MwT-22**	MESFET	800/1200	100	2.5 / 0.0	650 / 500	3.0 / 30.0	2.0 / 5.0	5.0	12.0 / 8.0	0.5	14.0 / 12.0	9.0	12
➤ **MwT-22QFN**	MESFET	800 / 1200	NA	2.5 / 0.0	650	3.0 / 30.5	2.0 / 5.0	5.0	12.0 / 8.0	5.0	14.0 / 12.0	9.0	12
➤ **MwT-24**	MESFET	1800/2400	200	2.5 / 0.0	1200 / 1000	3.0 / 120.0	2.0 / 5.0	12.0	12.0 / 8.0	12.0	16.0 / 14.0	12.0	7
➤ **MwT-25**	MESFET	2000/2600	200	2.5 / 0.0	1500 / 1000	3.0 / 150.0	2.0 / 5.0	14.0	12.0 / 8.0	14.0	16.0 / 14.0	12.0	6
MwT-A9	MESFET	78 / 282	12	2.0 / 0.0	120 / 95	3.0 / 5.0	2.0 / 5.0	1.0	10.0 / 5.0	1.0	10.0 / 6.0	6.0	70
➤ **MwT-A989SB**	MESFET	100 / 200	NA	2.5 / 0.0	90 / 120	3.0 / 5.0	2.0 / 5.0	1.0	12.0 / 6.0	1.0	12.0 / 6.0	8.0	75
➤ **MwT-H7**	PHEMT	34 / 106	4	3.0 / 0.0	75 / 50	3.0 / 1.0	1.5 / 5.0	0.4	8.0 / 5.0	0.4	8.0 / 6.0	6.0	180
➤ **MwT-LP7**	MESFET	38 / 98	4	3.0 / 0.0	45 / 36	3.0 / 1.0	1.5 / 4.5	0.4	8.0 / 5.0	0.4	8.0 / 6.0	6.0	180
➤ **MwT-PH15**	PHEMT	120 / 240	10	2.5 / 0.0	200 / 130	3.0 / 2.0	1.2 / 2.5	1.0	12.0 / 6.0	1.0	13.0 / 10.0	8.0	65
➤ **MwT-PH16**	PHEMT	150 / 360	15	2.5 / 0.0	280 / 180	3.0 / 3.0	1.2 / 2.5	1.0	12.0 / 6.0	1.0	13.0 / 10.0	8.0	45
➤ **MwT-PH7**	PHEMT	50 / 122	4	2.5 / 0.0	80 / 50	3.0 / 1.0	1.2 / 2.5	0.4	12.0 / 6.0	0.4	12.0 / 8.0	7.0	150
➤ **MwT-PH8**	PHEMT	240 / 600	20	2.5 / 0.0	320 / 240	3.0 / 8.0	1.2 / 2.5	1.2	12.0 / 6.0	1.2	13.0 / 10.0	8.0	40

Wireless Amplifiers (MPS, ULA and WPS WiMax)

- Miniature, Low Cost, SMT, Flange, & Leadless Options
- Miniature, High Reliability, Hermetic SMT Options
- Low Noise, High Linearity, and Broad Band Options
- Suitable for High Dynamic Range LNA and Receiver
- Suitable for High Linear Driver Amp Gain Stages
- Low VSWR for Improved Cascade Performance
- Single Voltage Supply and Low Current Design
- Uses MwT's Space-Qualified GaAs Devices
- Most Parts are Eutectic Assembly for High Reliability
- Standard and Customer Specific Specifications
- High-Rel and Space-Rel Screening Available (class H, K, and s)

MwT Standard High Linearity Driver Amplifiers

Model (Case Code - XX)	Case Code (- XX) Sealed SMT, Flange Leadless	Case Code (- XX) Hermetic SMT	Freq Range MHz	Linear Gain Typ/Min dB	Gain ± Flatness Typ/Max dB	VSWR: 1 Input Typ dB	VSWR: 1 Output Typ dB	Noise Figure Typ/Max dB	Pout @ -1 dB Typ/Min dBm	IP3 Typ/Min dBm	DC Voltage Applied V	DC Current Typ/Max mA
➤ New												
MPS 0810A9D-XX	82 , -	96	800-960	14.0/13.0	0.20/0.30	1.4	1.2	5.0 / -	26.0/25.0	42.0 / 41.0	7.5	220 / 280
MPS 093011-XX	82 , 85	96	800-1000	16.0/14.0	0.25/0.50	1.5	2.2	6.0 / -	30.0/-	45.0 / 43.0	7.5	380 / 450
➤ ULA 818-XX	82 , -	-	800-1000	15.5/14.0	0.25/0.50	1.5	1.5	-	28.0/-	48.0 / 46.0	8.0	270 / 350
MPS 173011-XX	82 , 85	96	1400-1700	14.0/13.0	0.25/0.50	1.5	2.2	6.0 / -	30.0/-	45.0 / 42.0	7.5	380 / 450
MPS 213011-XX	82, 85, 02	96	1700-2100	14.0/13.0	0.25/0.50	1.5	2.2	6.0 / -	29.0/-	45.0 / 42.0	7.5	380 / 450
➤ ULA 808-XX	82 , -	-	1800-2100	14.0/13.0	0.25/0.50	2.0	2.0	-	28.0/-	48.0 / 46.0	8.0	270 / 350
MPS 172208-XX	82 , 85	-	1900-2000	13.0/12.0	0.20/0.50	2.0	2.0	5.0 / -	26.0/25.0	38.0 / -	7.5	380 / 450
MPS 1820A9D-XX	82, -, 02	-	1800-2000	14.0/13.0	0.20/0.30	1.4	1.2	5.0 / -	26.0/25.0	42.0 / 41.0	7.5	220 / 280
➤ MPS 182217-XX	82, -, 02	-	1800-2200	14.0/13.0	0.25/0.50	1.5	3.0	6.0 / -	28.5/-	45.0 / 42.0	7.5	380 / 450
MPS 2125A9D-XX	82, -, 02	-	2100-2500	14.0/13.0	0.20/0.50	1.4	1.2	5.0 / -	26.0/25.0	42.0 / 41.0	7.5	220 / 280
MPS 242520-XX	- , 83	-	2400-2500	13.0/12.0	0.30/0.50	3.0	2.0	-	36.0/35.0	52.0 / -	8.0	750 / 900
MPS 252730-XX	- , 83	-	2500-2700	13.0/12.0	0.40/0.60	3.0	2.0	-	36.0/35.0	52.0 / -	8.0	750 / 900
MPS 253011-XX	82 , 85	96	2400-2700	13.0/12.0	0.25/0.50	1.5	2.2	6.0 / -	29.0/-	45.0 / 42.0	7.5	380 / 450
MPS 3435A9D-XX	82 , -	-	3400-3500	13.0/12.0	0.20/0.30	1.4	1.3	6.0 / -	24.0/23.0	41.0 / 39.0	7.5	220 / 280
MPS 343517-XX	82 , -	-	3400-3500	13.0/12.0	0.25/0.50	2.0	2.2	6.0 / -	29.0/-	45.0 / 42.0	7.5	380 / 450
➤ MPS-0810A9-02	02	-	800-960	15.0/14.0	0.20/0.80	1.5	2	1.1/1.5	20.5/-	34.0/-	6.0	160-240
➤ MPS-081017-02	02	-	800-1000	15.0/14.0	0.20/0.50	2.0	2.5	-	28.5/-	45.0/42.0	7.5	380-450
➤ MPS-0820A9D-02	02	-	800-2050	13.5/12.5	0.20/0.50	1.4	1.4	5.5 / -	24.0/-	43.0/-	6.0	220-280
➤ MPS-1720A9-02	02	-	800-960	14.0/13.0	0.20/0.50	2.1	1.5	1.1/1.5	20.0/-	33.0/-	6.0	100-140
➤ MPS-182117-02	02	-	1800-2100	14.0/13.0	0.25/0.50	2.0	2.5	1.1 / -	28.5/-	45.0/42.0	7.5	380-450
➤ MPS-242717-02	02	-	2400-2700	13.0/12.0	0.30/0.50	2.0	2.0	-	28.0/-	45.0/42.0	6.0-7.0	380-450
➤ MPS-343717-02	02	-	3400-3700	12.5/11.7	0.25/0.50	1.5	2.5	-	28.5/-	45.0/42.0	6.0-7.0	330-400
➤ MPS-081017P-02	02	-	800-960	14.0/13.0	0.20/0.50	2.0	2.0	1.3/1.7	26.0/-	44.0/-	6.0-7.0	330-400
➤ MPS-081017N-02	02	-	800-960	13.5/12.0	0.20/0.50	2.0	2.0	1.0/1.3	21.0/-	36.0/-	6.0-7.0	180-250
➤ MPS-343717-82	82	-	3400-3700	12.5/11.7	0.25/0.50	1.5	2.5	-	28.5/-	45.0/42.0	6.7	380-450
➤ MPS-343617-82	82	-	3400-3600	13.0/12.0	0.25/0.50	2.0	2.2	-	29.0/-	48.0/44.0	7.5	350-420
➤ MPS-363817-82	82	-	3600-3800	13.0/12.0	0.25/0.50	2.0	2.2	-	29.0/-	48.0/44.0	7.5	350-420

MwT Standard Low Noise Receiver Amplifiers

Model (Case Code - XX)	Case Code (- XX) Sealed SMT,Flange Leadless	Freq Range MHz	Linear Gain Typ/Min dB	Gain ± Flatness Typ/Max dB	VSWR: 1 Input Typ dB	VSWR: 1 Output Typ dB	Noise Figure Typ/Max dB	Pout @ -1 dB Typ dBm	IP3 Typ/Min dBm	DC Voltage Applied V	DC Current Typ/Max mA
MPS 080817P-XX	82, 85, 02	806-849	14.0/13.0	0.20/0.50	2.0	2.0	1.1 / 1.5	28.0	44.0 / 42.0	7.5	330 / 400
MPS 080817N-XX	82, 85, 02	806-849	13.5/12.0	0.20/0.50	2.0	2.0	0.8 / 1.0	23.0	36.0 / 33.0	7.5	180 / 250
MPS 0808A9-XX	- , 85	806-849	16.0/14.0	0.20/0.50	2.0	2.0	1.1 / 1.5	22.0	36.0 / 33.0	6.0	180 / 250
MPS 080917P-XX	NA, 85, 02	870-925	14.5/13.0	0.20/0.50	2.0	2.0	1.1 / 1.5	28.0	44.0 / 42.0	7.5	330 / 400
MPS 080917N-XX	82, 85, 02	870-925	13.5/12.0	0.20/0.50	2.0	2.0	0.8 / 1.0	23.0	36.0 / 33.0	7.5	180 / 250
MPS 0809A9-XX	82, 85	870-925	16.0/14.0	0.20/0.50	2.0	2.0	1.1 / 1.5	22.0	36.0 / 33.0	6.0	180 / 250
MPS 090917P-XX	82, 85, 02	925-960	14.5/13.0	0.20/0.50	2.0	2.0	1.1 / 1.5	28.0	44.0 / 42.0	7.5	330 / 400
MPS 090917N-XX	-, 85, 02	925-960	13.5/12.0	0.20/0.30	2.0	2.0	0.8 / 1.0	23.0	36.0 / 33.0	7.5	180 / 250
MPS 0909A9-XX	82 , 85	925-960	16.0/14.0	0.20/0.50	2.0	2.0	1.1 / 1.5	22.0	36.0 / 33.0	6.0	180 / 250
MPS 1718A9-XX	82 , 85	1710-1785	15.5/14.0	0.20/0.50	2.0	2.0	1.1 / 1.5	22.0	36.0 / 33.0	6.0	100 / 150
MPS 1820A9-XX	82 , 85	1850-1910	15.5/14.0	0.20/0.50	2.0	2.0	1.1 / 1.5	22.0	36.0 / 33.0	6.0	100 / 137

Note: Contact factory for hermetic package and low cost surface mount package.

Wireless Amplifiers
(MPS, ULA and WPS WiMax)

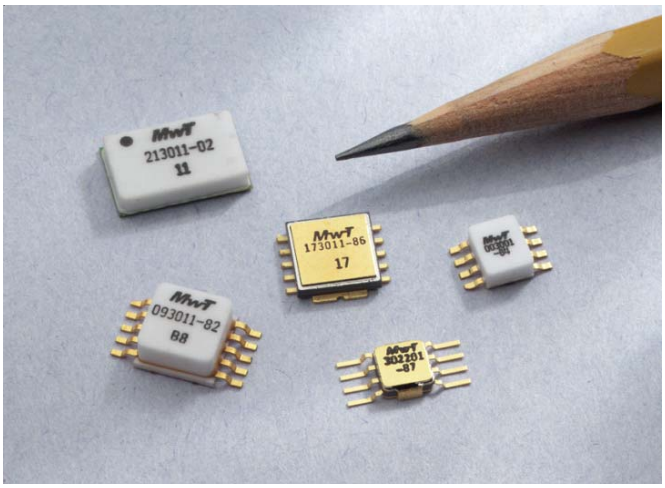

MwT Standard Broad Band General Purpose Amplifiers

Model (Case Code - ➤ New	Case Code (- XX) Sealed SMT,Flange Leadless	Case Code (- XX) Hermetic SMT	Freq Range MHz	Linear Gain Typ/Min dB	Gain ± Flatness Typ/Max dB	VSWR: Input Typ dB	VSWR: 1 Output Typ dB	Noise Figure Typ/Max dB	Pout @ -1 dB Typ/Min dBm	PAE @ -1 dB Typ %	IP3 Typ/Min dBm	DC Voltage Applied V	DC Current Typ/Max mA
MPS 003001-XX	84, -	87	20-3000	11.5/10.5	0.80/1.20	1.6	1.6	4.0*/ -	21.0 / 19.0	30*	34.0/-	5.0	90 / 160
MPS 302201-XX	-	87	100-3000	11.5/10.5	0.50/0.80	1.6	1.6	3.5*/5.0*	22.0 / 20.5	30	35.0/-	5.0	90 / 160
MPS 013001-XX	84, -	-	100-3000	11.5/10.5	0.80/1.20	1.6	1.6	3.5*/5.0*	21.0 / 19.0	30	34.0/-	5.0	90 / 160
MPS 082508-XX	82, 85	96	800-2500	13.0/11.0	0.50/1.00	2.0	2.0	5.0 / -	27.0 / 26.0	25	38.0/36.0	12.0	200 / 300
MPS 082509-XX	82, 85	96	800-2500	12.0/10.0	0.50/1.00	2.0	2.0	5.0 / -	25.5 / 23.0	25	36.0/-	10.0	135 / 200
➤ **MPS-0425A9D-82**	82	96	400-2500	14.0/13.0	0.50/0.80	1.4	1.2	-	25.0 / 24.0		42.0/40.0	7.5	220 / 280
➤ **MPS-032701A-82**	82	96	300-2700	20.0	1.0/-	2.0	2	5.0 / -	20.0 / 19.0		34.0/-	5.0	320-360

WPS - WiMax Amplifiers

Model #	Case Code Sealed	Case Code Hermetic	Freq Range	Linear Gain	Gain +/- Flatness	VSWR In	VSWR Out	P1dB	IP3	DC Voltage	DC Current
WPS-252717-XX	82	-	2500-2700	13.0/-	0.30/0.60	1.5	2.5	28.5	45	7.5	300
WPS-252724-XX	02,99	-	2500-2700	14.0/-	0.30/0.60	1.5	2.5	36.0	50	8.5	1200
MPS-343717-XX	82	-	3400-3700	13.0/-	0.30/0.60	1.5	2.5	29.0	45	7.5	380-450
MPS-343617-XX	82	-	3400-3600	13.0/-	0.30/0.60	1.5	2.5	29.0	48	7.5	380-450
MPS-363817-XX	82	-	3600-3800	13.0/-	0.30/0.60	1.5	2.5	29.0	48	7.5	380-450
WPS-343722-XX	02	-	3400-3700	13.0/-	0.30/0.60	1.5	2.5	32.0	47	8.0	600
WPS-343724-XX	02,99	-	3400-3700	14.0/-	0.30/0.60	1.5	2.5	36.0	50	8.0	1200
WPS-495917-XX	02	-	4900-5900	13.0/-	0.30/0.60	1.5	2.5	28.5	44	7.5	300
WPS-495922-XX	02	-	4900-5900	11.0/-	0.30/0.60	1.5	2.5	32.0	47	7.5	600

Optically Isolated Solid State Relays

The OptoMOS line of Solid State Relays uses discrete semiconductor components and the patented OptoMOS architecture to deliver fast, reliable, bounce-free switching in a compact design. From the world's smallest single-pole, high-voltage, 4-pin relay to multi-pole and multifunction devices, OptoMOS products are an ideal solid state replace-ment for larger reed and electromechanical relays. Compared to older electromagnetic technologies, the Clare OptoMOS relays offer significantly lower drive current, small package size, no susceptibility to magnetic interference and solid-state reliability. All of these are key requirements for the design of today's complex low-power, multichannel products.

The small single pole 4-pin SOP relays combine our state-of-the-art, double-molded, vertical-construction packaging with high performance to give you a reliable product with 20% savings in board space compared to other 4-pin products.

Dual pole OptoMOS relays combine two independent relays into a single 8-pin package paving the way for designers to condense functionality using a single component. Common input OptoMOS relays provide a design alternative where two independent outputs are driven by the same input signal.

Features

- Low drive current
- High reliability
- No EMI/RFI generation
- Arc-free with no snubbing circuits
- Machine insertable, wave solderable
- AC/DC switching
- Current limiting (available)
- FCC compatible
- Low off state leakage

Applications

- Telecommunications/Datacommunications
- Instrumentation
- Multiplexers
- Data acquisition/Electronic switching
- I/O subsystems
- Meters (watt-hour, water, gas)
- Medical equipment (patient/equipment isolation)
- Security
- Aerospace
- Industrial controls

Single Pole Normally Open: 1-Form-A - Operational temperature range of -40⁰ to 85⁰C

Part Number	Load Voltage V	Load Current mA	On Resistance Ω	Input Control Current mA	Switching Speeds T_{ON}/T_{OFF} ms	Isolation Voltage V_{rms}	Package Type ①	Features
CPC1008N	100	150	8	2	2 / 0.5	1500	4-Pin SMT	
CPC1016N	100	100	16	2	2 / 0.5	1500	4-Pin SMT	
CPC1017N	60	100	16	1	10 / 10	1500	4-Pin SMT	
CPC1018N	60	600	0.8	2	2 / 1	1500	4-Pin SMT	**NEW**
CPC1025N	400	120	30	2	2 / 1	1500	4-Pin SMT	
CPC1030N	350	120	30	2	2 / 1	1500	4-Pin SMT	
CPC1035N	350	100	35	2	2 / 1	1500	4-Pin SMT	
CPC1230N	350	120	30	2	2 / 1	1500	4-Pin SMT	Supplementary Isolation
CPC1330	350	120	30	2	2 / 1	5000	4-Pin SMT, TH	**NEW**
CPC1335P	350	100	35	1	10 / 10	3750	8-Pin SMT	**NEW** Bi-directional TVS Protection
CPC1390	400	140	22	2	1 / 0.5	5000	4-Pin SMT, TH	**NEW**
CPC1393	600	100	50	5	5 / 5	5000	4-Pin SMT, TH	**NEW**
CPC1510	250	200	15	5	2 / 2	3750	6-Pin SMT, TH	**NEW** Active Current Limit + Thermal Shutdown
LCA100	350	120	25	5	5 / 5	3750	6-Pin SMT, TH	
LCA100L	350	120	25	5	5 / 5	3750	6-Pin SMT, TH	Current Limit
LCA110	350	120	35	2	3 / 3	3750	6-Pin SMT, TH	
LCA110L	350	120	35	2	3 / 3	3750	6-Pin SMT, TH	Current Limit
LCA120	250	170	20	5	5 / 5	3750	6-Pin SMT, TH	
LCA120L	250	150	20	5	3 / 3	3750	6-Pin SMT, TH	Current Limit
LCA125	350	170	16	5	5 / 5	3750	6-Pin SMT, TH	
LCA125L	350	170	20	5	5 / 5	3750	6-Pin SMT, TH	Current Limit
LCA126	250	170	15	5	5 / 5	3750	6-Pin SMT, TH	
LCA127	250	200	10	5	5 / 5	3750	6-Pin SMT, TH	
LCA127L	250	170	15	5	5 / 5	3750	6-Pin SMT, TH	Current Limit
LCA129	250	170	20	2	8 / 8	3750	6-Pin SMT, TH	
LCA710	60	1000	0.5	10	2.5 / 0.25	3750	6-Pin SMT, TH	
LCA712	60	1000	0.5	10	2.5 / 0.5	3750	6-Pin SMT, TH	Low Off State Leakage 10nA
LCA715	60	1800	0.25	10	5 / 2	3750	6-Pin SMT, TH	High Load Current
LCA182	350	120	35	0.25	3 / 3	3750	6-Pin SMT, TH	Ultra Low Input Control Current

① *For Package Type, SMT indicates Surface Mount Technology while TH indicates Through-hole.*

Single Pole Normally Open: 1-Form-A - Operational temperature range of -40⁰ to 85⁰C

Part Number	Load Voltage V	Load Current mA	On Resistance Ω	Input Control Current mA	Switching Speeds T_{ON}/T_{OFF} ms	Isolation Voltage V_{rms}	Package Type ①	Features
OMA160	250	50	100	10	0.125/0.125	3750	6-Pin SMT, TH	Low Off State Leakage 25nA
PLA110	400	150	22	5	1 / 0.25	3750	6-Pin SMT, TH	
PLA110L	400	150	25	5	1 / 0.25	3750	6-Pin SMT, TH	Current Limit
PLA132	50	600	1	5	5 / 2	3750	6-Pin SMT, TH	
PLA134	100	350	3	5	5 / 5	3750	6-Pin SMT, TH	
PLA140	400	250	8	5	3 / 1	3750	6-Pin SMT, TH	
PLA140L	400	170	13	5	5 / 3	3750	6-Pin SMT, TH	Current Limit
PLA143	600	100	50	5	5 / 5	4000	6-Pin SMT, TH	
PLA150	250	250	7	5	2.5 / 0.5	3750	6-Pin SMT, TH	
PLA160	300	50	100	10	0.05 / 0.05	3750	6-Pin SMT, TH	Low Off State Leakage 25nA
PLA170	800	100	50	5	5 / 5	3750	6-Pin SMT, TH	
PLA190	400	150	22	5	1 / 0.25	5000	6-Pin SMT, TH	
PLA191	400	250	8	5	1.5 / 0.25	5000	6-Pin SMT, TH	
PLA192	600	150	22	5	5 / 5	5000	6-Pin SMT, TH	
PLA193	600	100	50	5	5 / 5	5000	6-Pin SMT, TH	
XCA170	350	100	50	5	5 / 5	3750	6-Pin SMT, TH	

① For Package Type, SMT indicates Surface Mount Technology while TH indicates Through-hole.

Block diagrams

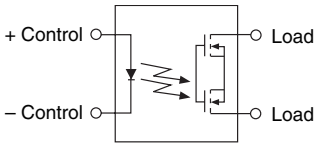

AC/DC Configuration

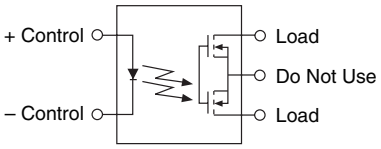

DC Only Configuration

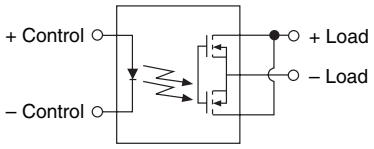

Single Pole Normally Open: 1-Form-A DC-Only - Operational temperature range of -40⁰ to 85⁰C

Part Number	Load Voltage V	Load Current mA	On Resistance Ω	Input Control Current mA	Switching Speeds T_{ON}/T_{OFF} ms	Isolation Voltage V_{rms}	Package Type ①	Features
CPC1002N	60	700	0.55	2	5 / 2	1500	4-Pin SMT	
CPC1004N	100	300	4	2	3 / 1	1500	4-Pin SMT	Operat. Temperature to +110°C

Block diagram

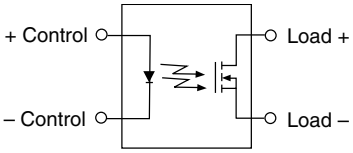

Single Pole Normally Open: 1-Form-A Voltage Controlled - Operational temperature range of -40⁰ to 85⁰C

Part Number	Load Voltage V	Load Current mA	On Resistance Ω	Input Control Current mA	Switching Speeds T_{ON}/T_{OFF} ms	Isolation Voltage V_{rms}	Package Type	Features
CPC1218Y	60	600	0.8	5-12	5 / 5	2500	4-Pin SIP	**NEW -** Reed Relay Replacement

Block diagram

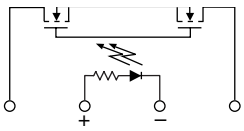

NEW

Dual Independent Single Pole Normally Open: Dual 1-Form-A

Operational temperature range of -40⁰ to 85⁰C

Part Number	Load Voltage V	Load Current mA	On Resistance Ω	Input Control Current mA	Switching Speeds T_{ON}/T_{OFF} ms	Isolation Voltage V_{rms}	Package Type ①	Features
LAA100	350	120	25	5	5 / 5	3750	8-Pin SMT, TH	
LAA100L	350	120	25	5	5 / 5	3750	8-Pin SMT, TH	Current Limit
LAA110	350	120	35	5	3 / 3	3750	8-Pin SMT, TH	
LAA110L	350	120	35	5	3 / 3	3750	8-Pin SMT, TH	Current Limit
LAA120	250	170	20	5	5 / 5	3750	8-Pin SMT, TH	
LAA120L	250	150	25	5	5 / 5	3750	8-Pin SMT, TH	Current Limit
LAA125	350	170	16	5	5 / 5	3750	8-Pin SMT, TH	
LAA125L	350	150	20	5	5 / 5	3750	8-Pin SMT, TH	Current Limit
LAA126	250	170	15	5	5 / 5	3750	8-Pin SMT, TH	
LAA126L	250	170	20	5	5 / 5	3750	8-Pin SMT, TH	Current Limit
LAA127	250	200	10	5	5 / 5	3750	8-Pin SMT, TH	
LAA127L	250	170	15	5	5 / 5	3750	8-Pin SMT, TH	Current Limit
LAA710	60	1000	0.5	10	2.5 / 0.25	3750	8-Pin SMT, TH	
OAA160	250	50	100	3	0.125 / 0.125	3750	8-Pin SMT, TH	Low Off State Leakage 25nA
PAA110	400	150	22	5	1 / 0.25	3750	8-Pin SMT, TH	
PAA110L	400	150	25	5	1 / 0.25	3750	8-Pin SMT, TH	Current Limit
PAA132	50	600	25	5	5 / 2	3750	8-Pin SMT, TH	
PAA140	400	250	8	5	1.5 / 0.25	3750	8-Pin SMT, TH	
PAA140L	400	200	13	5	5 / 3	3750	8-Pin SMT, TH	Current Limit
PAA150	250	250	7	5	2.5 / 0.5	3750	8-Pin SMT, TH	
PAA190	400	150	22	5	1 / 0.5	5000	8-Pin SMT, TH	
PAA191	400	250	8	5	3 / 1	5000	8-Pin SMT, TH	
PAA193	600	100	50	5	5 / 5	5000	8-Pin SMT, TH	
XAA170	350	100	50	5	5 / 5	3750	8-Pin SMT, TH	

① *For Package Type, SMT indicates Surface Mount Technology while TH indicates Through-hole.*

Block diagram

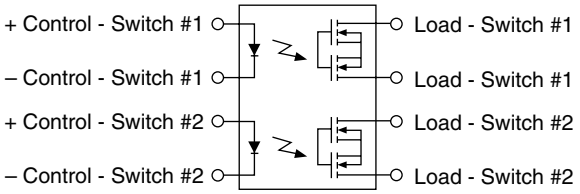

Common Input, Dual Pole: 2-Form-A

Operational temperature range of -40⁰ to 85⁰C

Part Number	Load Voltage V	Load Current mA	On Resistance Ω	Input Control Current mA	Switching Speeds T_{ON}/T_{OFF} ms	Isolation Voltage V_{rms}	Package Type ①	Features
LCA210	350	85	35	8	3 / 3	3750	8-Pin SMT, TH	
LCA210L	350	100	35	5	4 / 4	3750	8-Pin SMT, TH	Current Limit
LCA211	350	85	35	8	1 / 1.2	3750	8-Pin SMT, TH	
LCA220	250	120	20	10	5 / 5	3750	8-Pin SMT, TH	

① *For Package Type, SMT indicates Surface Mount Technology while TH indicates Through-hole.*

Block diagram

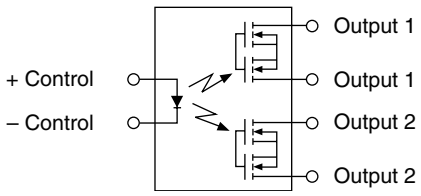

Single Pole Normally Closed: 1-Form-B - Operational temperature range of -40⁰ to 85⁰C

Part Number	Load Voltage V	Load Current mA	On Resistance Ω	Input Control Current mA	Switching Speeds T_{ON}/T_{OFF} ms	Isolation Voltage V_{rms}	Package Type ①	Features
CPC1117N	60	150	16	1	1 / 2	1500	4-Pin SMT	
CPC1130N	350	120	30	2	2 / 2	1500	4-Pin SMT	
CPC1135N	350	120	35	1	2 / 2	1500	4-Pin SMT	
CPC1150N	350	120	50	2	1 / 2	1500	4-Pin SMT	
CPC1231N	350	120	30	2	2 / 2	1500	4-Pin SMT	Supplementary Isolation
LCB110	350	120	35	5	3 / 3	3750	6-Pin SMT, TH	
LCB111	350	120	35	2	5 / 5	3750	6-Pin SMT, TH	
LCB120	250	170	20	5	5 / 5	3750	6-Pin SMT, TH	
LCB126	250	170	15	5	5 / 5	3750	6-Pin SMT, TH	
LCB127	250	200	10	5	5 / 5	3750	6-Pin SMT, TH	
PLB150	250	250	7	5	1 / 2.5	3750	6-Pin SMT, TH	

① For Package Type, SMT indicates Surface Mount Technology while TH indicates Through-hole.

Block diagram

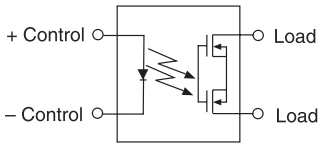

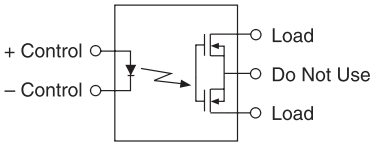

DC Only Configuration

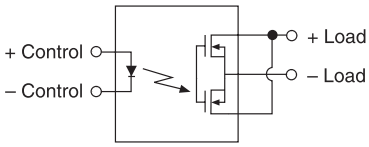

Dual Independent Single Pole Normally Closed: 2-Form-B - Operational temperature range of -40⁰ to 85⁰C

Part Number	Load Voltage V	Load Current mA	On Resistance Ω	Input Control Current mA	Switching Speeds T_{ON}/T_{OFF} ms	Isolation Voltage V_{rms}	Package Type ①
LBB110	350	120	35	5	3 / 3	3750	8-Pin SMT, TH
LBB120	250	170	20	5	5 / 5	3750	8-Pin SMT, TH
LBB126	250	170	15	5	5 / 5	3750	8-Pin SMT, TH
LBB127	250	200	10	5	5 / 5	3750	8-Pin SMT, TH
PBB150	250	250	7	5	2.5 / 2.5	3750	8-Pin SMT, TH
XBB170	350	100	50	5	5 / 5	3750	8-Pin SMT, TH

① For Package Type, SMT indicates Surface Mount Technology while TH indicates Through-hole.

Block diagram

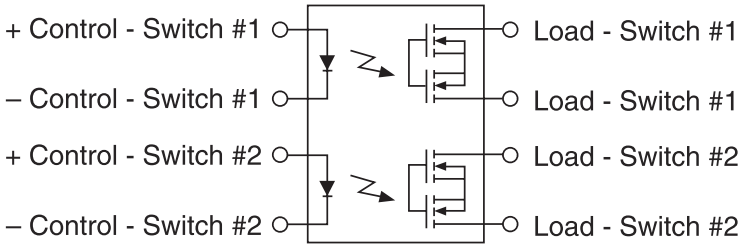

Dual Pole Combination: Form-A & B - Operational temperature range of -40⁰ to 85⁰C

Part Number	Load Voltage V	Load Current mA	On Resistance Ω	Input Control Current mA	Switching Speeds T_{ON}/T_{OFF} ms	Isolation Voltage V_{rms}	Package Type ①	Features
LBA110	350	120	35	5	3 / 3	3750	8-Pin SMT, TH	
LBA110L	350	120	35	5	3 / 3	3750	8-Pin SMT, TH	Current Limit
LBA120	250	170	20	5	5 / 5	3750	8-Pin SMT, TH	
LBA120L	250	150	25	5	5 / 5	3750	8-Pin SMT, TH	Current Limit
LBA126	250	170	15	5	5 / 5	3750	8-Pin SMT, TH	
LBA126L	250	150	20	5	5 / 5	3750	8-Pin SMT, TH	Current Limit
LBA127	250	200	10	5	5 / 5	3750	8-Pin SMT, TH	
LBA127L	250	150	15	5	5 / 5	3750	8-Pin SMT, TH	Current Limit
PBA150	250	250	7	5	2.5 / 2.5	3750	8-Pin SMT, TH	
XBA170	350	100	50	5	5 / 5	3750	8-Pin SMT, TH	

① For Package Type, SMT indicates Surface Mount Technology while TH indicates Through-hole.

Block diagram

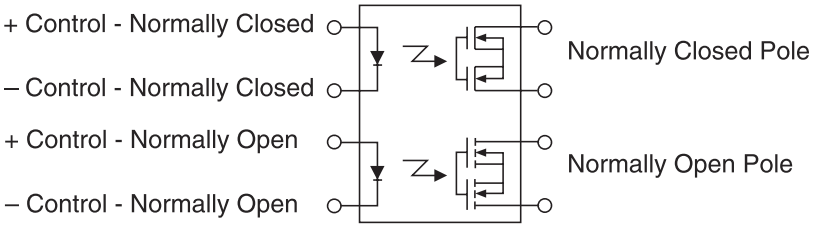

Common Input: 1-Form-C - Operational temperature range of -40⁰ to 85⁰C

Part Number	Load Voltage V	Load Current mA	On Resistance Ω	Input Control Current mA	Switching Speeds T_{ON}/T_{OFF} ms	Isolation Voltage V_{rms}	Package Type ①
LCC110	350	120	35	8	4 / 4	3750	8-Pin SMT, TH
LCC120	250	170	20	10	5 / 5	3750	8-Pin SMT, TH

① For Package Type, SMT indicates Surface Mount Technology while TH indicates Through-hole.

Block diagram

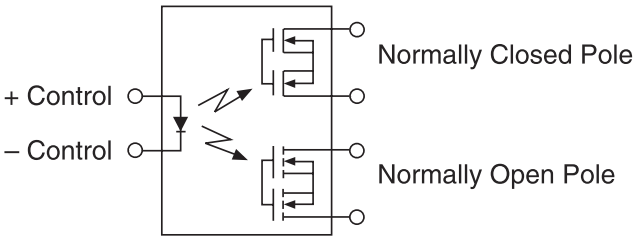

Optically Isolated AC-Power Switches

The OptoMOS line of power products use dual power SCR outputs to produce an alternative to optocoupler and Triac circuits. These AC- Power Switches are robust enough to provide a blocking voltage of up to 800V_P. In addition, tightly controlled zero-cross circuitry ensures switching of AC loads without the generation of transients. The input and output circuits are optically coupled to provide 3750V_{rms} of isolation and noise immunity between control and load circuits. Long life and environmental integrity make these power switches ideal to control a variety of AC circuits in industrial environ-ments where electromagnetic interference would disrupt the operation of electromechanical relays.

Features

- Load current up to 2 A
- Blocking voltage up to 800 V_P
- 5m A sensitivity
- Zero-crossing detection
- DC control, AC switching
- Optically isolated I/O
- TTL and CMOS compatible
- Low EMI and RFI generation
- High noise immunity
- VDE compatible
- Machine insertable, wave solderable
- Switching speed < 0.5 cycle

Applications

- Programmable controls
- Process control
- Power control panels
- Remote switching
- Gas pump electronics
- Contactors
- Large relay control circuits
- Solenoids
- Motor controls
- Heater controls

Operational temperature range of -40^0 to 85^{0}C

Part Number	Blocking Voltage V_P	Load Current A_{rms}	Operating Frequency min/max Hz	Input Control Current mA	Isolation Voltage V_{rms}	Package Type	Features
CPC1943G	240	0.5	20 / 400	5	3750	D, E	
CPC1945G	400	1	20 / 400	5	3750	C	
CPC1945Y	400	1	20 / 400	5	3750	A	
CPC1961G	600	0.2	20 / 400	5	3750	F, G	**NEW** Dual
CPC1962G	600	0.3	20 / 500	5	3750	D, E	**NEW**
CPC1963G	600	0.5	20 / 500	5	3750	D, E	
CPC1965G	600	1	20 / 400	5	3750	C	
CPC1965Y	600	1	20 / 400	5	3750	A	
CPC1972G	800	0.25	20 / 500	5	3750	D, E	**NEW**
CPC1976Y	600	2	20 / 500	5	3750	B	**NEW**
PD1201	400	1	20 / 500	5	3750	C	
PD2401	500	1	20 / 500	5	3750	C	
PD2601	600	1	20 / 500	5	3750	C	
PM1204	400	0.5	20 / 500	5	3750	D, E	
PM1205	500	0.5	20 / 500	5	3750	D, E	
PM1206	600	0.5	20 / 500	5	3750	D, E	
PS1201	400	1	20 / 500	5	3750	A	
PS2401	500	1	20 / 500	5	3750	A	
PS2601	600	1	20 / 500	5	3750	A	

Block Diagram

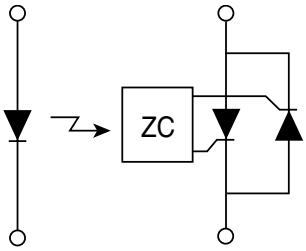

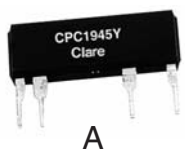

A

B

C

D

E

F

G

Power Solid State Relays

(Power dissipation greater than 1 Watt)

Power SIP, ISOPLUS™-264 and i4-PAC™ Relays

Clare and IXYS have joined forces to bring OptoMos technology, reliability and compact size to the new Power SIP, i4-PAC and ISOPLUS-264 series of power solid state relays. Development of these new products was founded on the blending of Clare's traditional strengths in the design and manufacture of photovoltaic integrated circuits (ICs), lead-frame design and multichip packaging with IXYS' expertise in power MOSFETs, power packages and substrate technology.

The optically coupled MOSFET technology provides 2500V_{rms} of input to output isolation. Similar to Clare's solid state relays, the optically coupled output is controlled by a GaAIAs infrared LED.

Clare Power Relays are now offered in three package types: the **Power SIP**, the **i4-PAC**, and the **ISOPLUS-264**. The Power SIP package offers pin-to-pin compatibility with other solid state relays providing an easy upgrade path for existing designs and compatibility for new designs.

The i4-PAC and the ISOPLUS-264 packages feature a unique assembly process whereby the silicon is soft soldered onto a Direct Copper Bond (DCB) substrate rather than traditional bonding onto an epoxy encapsulated copper frame. This structure allows for a substantially lower junction-to-case thermal impedance when compared to conventionally assembled power relays. The i4-PAC thermal resistance is 0.35°C/W while the ISOPLUS-264 has an even lower impedance of 0.30°C/W.

Although exposed on the backside of these packages, the electrically non-conductive surface of the DCB ceramic substrate provides 2500V_{rms} of isolation to the package's electrically conductive power switching and control leads.

The combination of an electrically isolated non-conductive exterior and low thermal impedance makes the new i4-PAC and ISOPLUS-264 power relays an ideal solution for power applications preferring a non-biased heat sink with superior thermal management properties.

Features

- Handles loads up to 9A
- Voltage ratings up to 1000V_P
- Low On-resistance
- Non-conductive thermal pad for heat sink applications
- Industry standard 4-Pin SIP package
- Low input control current
- Low thermal impedances:
  0.30°C/W - ISOPLUS-264
  0.35°C/W - i4-PAC
  1.5°C/W - Power SIP

Applications

- Motor controls
- Robotics
- Medical equipment
- Railroad/traffic controls
- Consumer appliances
- Industrial control
- Test and measurement equipment

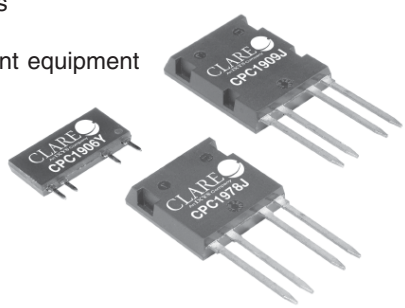

Specifications for: AC/DC Single Pole Power SIP, ISOPLUS-264 and i4-PAC Relays

Part Number	Blocking Voltage V_P	Load Current (Free Air) A_{rms}	On Resistance Ω	Switching Speeds T_{ON}/T_{OFF} ms	Input Control Current mA	Isolation Voltage V_{rms}	Package
CPC1906Y	60	2	0.3	10 / 5	10	2500	Power SIP
CPC1908J	60	3.5	0.3	20 / 5	10	2500	i4-PAC
CPC1909J	60	6.5	0.1	25 / 10	10	2500	ISOPLUS-264
CPC1916Y	100	2.5	0.34	5 / 3	10	2500	Power SIP
CPC1918J	100	5.25	0.1	25 / 10	10	2500	ISOPLUS-264
CPC1926Y	250	0.7	1.4	10 / 10	10	2500	Power SIP
CPC1967J	400	1.35	0.6	20 / 5	10	2500	i4-PAC
CPC1973Y	400	0.35	5	5 / 3	10	2500	Power SIP
CPC1977J	600	1.25	1	20 / 5	10	2500	i4-PAC
CPC1978J	800	0.9	2.3	20 / 5	10	2500	i4-PAC
CPC1979J	600	1.5	0.75	25 / 5	10	2500	ISOPLUS-264
CPC1981Y	1000	0.18	18	10 / 5	10	2500	Power SIP
CPC1986J	1000	0.7	3	20 / 5	10	2500	i4-PAC
CPC1988J	1000	0.9	2.5	20 / 5	10	2500	ISOPLUS-264

Block Diagram

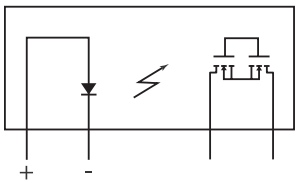

Specifications for: DC-only Single Pole i4-PAC Relays

Part Number ➤ New	Blocking Voltage V	Load Current (Free Air) A	On Resistance Ω	Switching Speeds T_{ON}/T_{OFF} ms	Input Control Current mA	Isolation Voltage V_{rms}	Package
➤ **CPC1708J**	60	4	0.08	20 / 5	10	2500	i4-PAC
➤ **CPC1709J**	60	9	0.025	20 / 5	10	2500	ISOPLUS-264
CPC1777J	600	1.5	0.5	20 / 5	10	2500	i4-PAC
CPC1786J	1000	0.65	2	20 / 5	10	2500	i4-PAC

Block Diagram

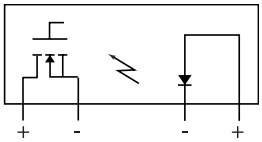

Package Dimensions

Power SIP

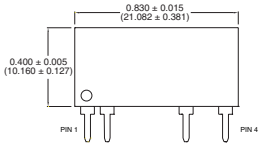

i4-PAC™

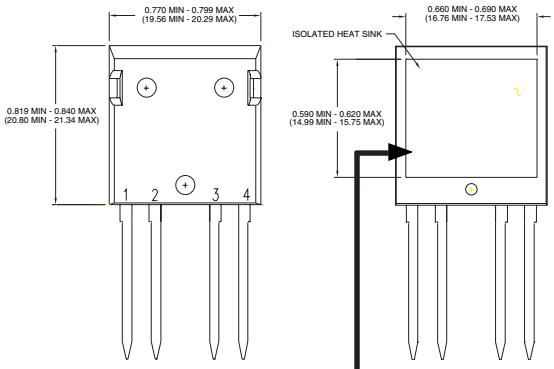

ISOPLUS264

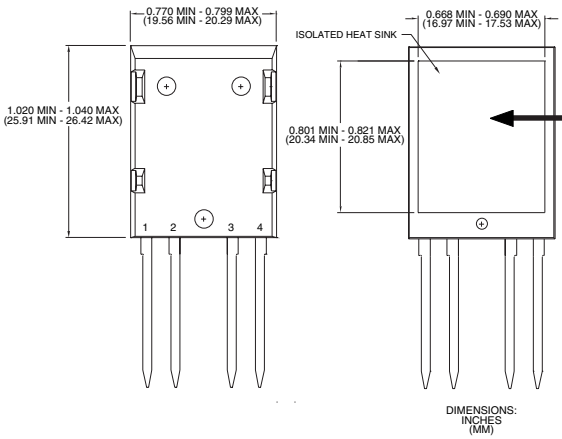

Non-conductive thermal pad

Dimensions:
inches
(mm)

Linear Optocouplers and Isolation Amplifiers

OptoMOS Linear Optocouplers feature an infrared LED optically coupled to a pair of phototransistors. One feedback (input) phototransistor is used to generate a control signal that provides a servomechanism to the LED drive current thus compensating for the LEDs nonlinear time and temperature characteristics. The output phototransistor provides an isolated output signal that is linear with respect to the servo LED current.

OptoMOS Linear Isolation Amplifiers integrate a linear optocoupler with two independent LF356 op-amps in a single 16-pin package. These amplifiers can couple both AC and DC signals in either uni-polar or bi-polar modes, while providing $3750V_{rms}$ of input/output isolation. Using a servo control loop to compensate for the nonlinear time and temperature characteristics of the LED, these amplifiers distinguish themselves among conventional optocouplers by significantly improving linearity and stability.

Features

- Couples analog and digital signals
- $3750V_{rms}$ input/output isolation
- Wide bandwidth (>200kHz)
- High gain stability
- Low input/output capacitance
- Low power consumption
- 0.01% servo linearity
- THD 87dB typical
- Machine insertable, wave solderable
- VDE compatible

Applications

- Modem transformer replacement with no insertion loss
- Digital telephone isolation
- Power supply feedback voltage/current
- Medical sensor interfacing
- Isolation of process control transducers

Operational temperature range of -40⁰ to 85⁰C

Part Number	Servo Gain K1	Forward Gain K2	Transfer Gain K3	Input Control Current mA	Isolation Voltage V_{rms}	Package [1] Type
LOC110	0.004 / 0.03	0.004 / 0.03	0.55 / 1.43	2	3750	8-Pin SMT, TH
LOC111	0.008 / 0.03	0.006 / 0.03	0.733 / 1.072	2	3750	8-Pin SMT, TH
LOC112	0.004 / 0.03	0.004 / 0.03	0.55 / 1.43	2	3750	8-Pin SMT, TH
LOC210P	0.004 / 0.03	0.004 / 0.03	0.733 / 1.072	2	3750	16-Pin SMT
LOC211P	0.008 / 0.03	0.006 / 0.03	0.733 / 1.072	2	3750	16-Pin SMT
LIA100	0.004 / 0.03	0.004 / 0.03	0.55 / 1.43	2	3750	16-Pin SMT
LIA101	0.004 / 0.03	0.004 / 0.03	0.733 / 1.072	2	3750	16-Pin SMT

[1] For Package Type, SMT indicates Surface Mount Technology while TH indicates Through-hole.

Block Diagrams

LOC

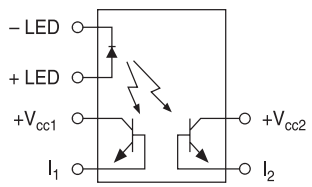

LIA

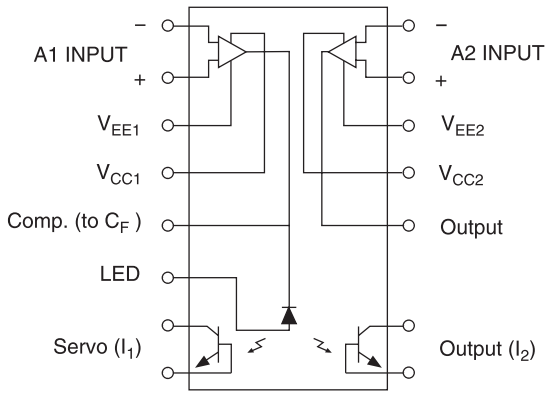

Optically Isolated Error Amplifiers

Optically Isolated Linear Error Amplifiers combine Clare's optical technology with an industry standard 431-type precision programmable shunt regulator to provide linear isolated feedback for power supply designs. The LIA120 features matched photodiodes for linear high-gain response exhibiting excellent temperature stability for a total gain error of less than 2 dB.

These devices are well suited for isolated high-gain feedback amplifiers that require excellent linearity and low temperature variation such as power supply feedback stages, modem and audio transformer replacements, industrial control signals, and sensor feedback.

Features

- Fully Matched IC
- 70dB Linearity (typ.)
- Optocoupler, precision reference and error amplifier in single package
- Low voltage operation 2.7V

Applications

- Power supply feedback
- Telecom central office supply
- Telecom bricks
- Modem transformer replacement

Operational temperature range of -40⁰ to 85⁰C

Part Number	Reference Voltage	V_{REF} Tolerance	CTR K1	CTR K2	CTR Matching K3	Linearity	Isolation Voltage V_{rms}	Package [1] Type
LIA120	1.24V	2%	1 to 3%	1 to 3%	85 to 115%	70dB	3750	**NEW -** 8-Pin SMT, TH
LIA130	1.24V	2%	-	-	-	-	3750	**NEW -** 8-Pin SMT, TH

[1] *For Package Type, SMT indicates Surface Mount Technology while TH indicates Through-hole.*

Block Diagrams

LIA 120

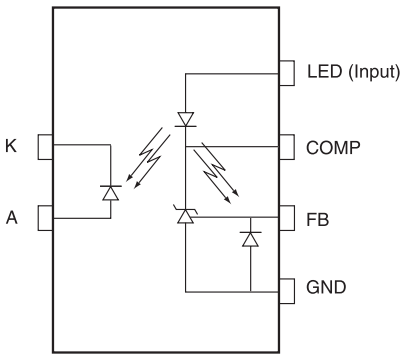

LIA 130

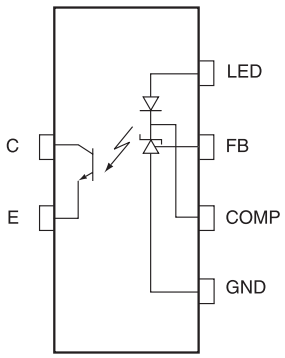

Single and Dual Optocouplers

Single and dual OptoMOS products provide an optically isolated means of current detection or control of switching circuits. Devices offer a single or dual antiparallel LED input stage for unidirectional or bidirectional signal control to the optically coupled phototransistor output. The phototransistor output can be either a single transistor or, for greater gain, a darlington transistor.

These optocouplers allow for either AC or DC input circuits and are ideal for telecom, industrial control and instrumen-tation circuits where electrical isolation of control circuitry is crucial.

Features

- AC and DC compatable inputs
- 3750V_{rms} input/output isolation
- Machine insertable, wave solderable

Applications

- Telecom switching
- Tip/ring circuits
- Modem switching (laptops, notebooks, PDAs)
- Loop detection
- Ringing detection
- Current sensing

Operational temperature range of -40⁰ to 85⁰C

Part Number	Breakdown Voltage V	Nominal Current Transfer Ratio %	Saturation Voltage V	Input Control Current mA	Isolation Voltage V_{rms}	Package [1] Type	Configuration
LDA100	20	100	0.5	6	3750	6-Pin SMT, TH	A
LDA101	20	100	0.5	6	3750	6-Pin SMT, TH	B
LDA110	20	1000	0.8	2	3750	6-Pin SMT, TH	C
LDA111	20	1000	0.8	2	3750	6-Pin SMT, TH	D
LDA200	20	100	0.5	6	3750	8-Pin SMT, TH	E
LDA201	20	100	0.5	6	3750	8-Pin SMT, TH	F
LDA202	20	100	0.5	6	3750	8-Pin SMT, TH	**NEW** E
LDA203	20	100	0.5	6	3750	8-Pin SMT, TH	**NEW** F
LDA210	20	1000	0.8	2	3750	8-Pin SMT, TH	G
LDA211	20	1000	0.8	2	3750	8-Pin SMT, TH	H
LDA212	20	1000	0.8	2	3750	8-Pin SMT, TH	**NEW** G
LDA213	20	1000	0.8	2	3750	8-Pin SMT, TH	**NEW** H

[1] *For Package Type, SMT indicates Surface Mount Technology while TH indicates Through-hole.*

Block Diagrams

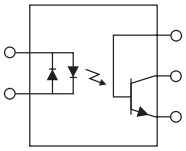

A

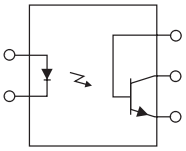

B

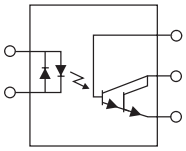

C

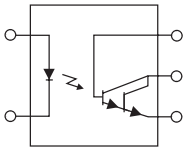

D

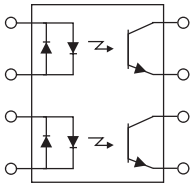

E

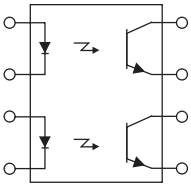

F

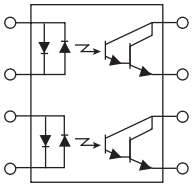

G

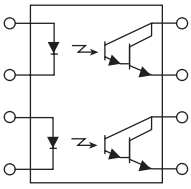

H

Multifunction Products

The OptoMOS line of Multifunction products combines optically-isolated discrete component functions into a single package. These products mix and match solid-state relays, optocouplers, bridge rectifiers, Darlington transistors and zener diodes to create highly functional circuits in a single, small package. Multifunction devices allow designers to consolidate circuit functions into a single device, freeing up valuable board space and reducing component count.

Features

- 3750V_{rms} input to output isolation
- Multiple functionality in single package
- Current limiting (part numbers with L suffix)
- Machine insertable, wave solderable
- TTL and CMOS compatible

Applications

- Telecommunication/Datacommunication
- Instrumentation
- I/O subsystems
- Electronic switching
- Medical equipment (patient/equipment isolation)
- Security
- Aerospace
- Industrial controls

Combination SSR & Optocoupler Products (IAx, IBx, TS, XS) - Operational temperature range of -40^0 to 85^{0}C

	Relay Parameters			Octocoupler Parameters							
Part Number	Load Voltage V_P	Current Handling mA	On Resistance Ω	Input Control Current mA	Break-down Voltage V	Current Transfer Ratio %	Saturation Voltage V	Input Control Current mA	Isolation Voltage V_{rms}	Package [1] Type	Features
IAA110P	350	100	35	5	20	33	0.5	6	3750	16-Pin SMT	
IAA170P	350	100	50	5	20	33	0.5	6	3750	16-Pin SMT	
IAB110P	350	100	35	5	20	33	0.5	6	3750	16-Pin SMT	
IAD110P	350	100	35	5	20	33	0.5	6	3750	16-Pin SMT	
IAD170P	350	100	50	5	20	33	0.5	6	3750	16-Pin SMT	
IBB110P	350	100	35	5	20	33	0.5	6	3750	16-Pin SMT	
TS112N	350	120	20	2	20	100	0.5	6	1500	8-Pin SMT Narrow	
TS117	350	120	35	2	20	100	0.5	6	3750	8-Pin SMT, TH	
TS117L	350	120	35	2	20	100	0.5	6	3750	8-Pin SMT, TH	Current Limit
TS118	350	120	35	5	20	100	0.5	6	3750	8-Pin SMT, TH	Form B
TS120	350	120	35	5	20	1000	0.8	2	3750	8-Pin SMT, TH	
TS120L	350	120	35	5	20	1000	0.8	2	3750	8-Pin SMT	Current Limit
TS122	350	170	20	5	20	100	0.5	6	3750	8-Pin SMT, TH	
TS190	350	150	22	5	20	100	0.5	6	3750	8-Pin SMT, TH	
TS190L	350	150	25	5	20	100	0.5	6	3750	8-Pin SMT	Current Limit
XS170	350	120	50	2	20	100	0.5	6	3750	8-Pin SMT, TH	

[1] *For Package Type, SMT indicates Surface Mount Technology while TH indicates Through-hole.*

Block Diagrams

IAA Series

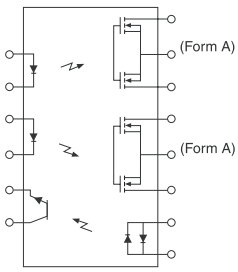

IAB Series

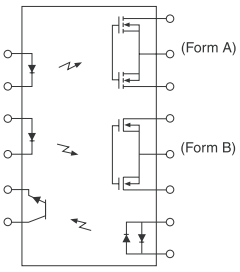

IAD Series

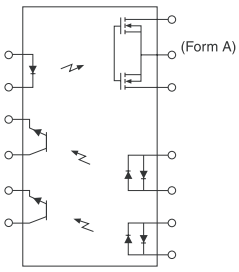

IBB Series

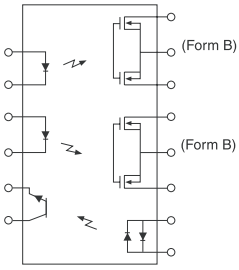

TS with Form A Relay

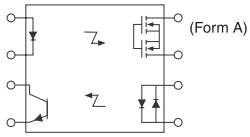

TS with Form B Relay

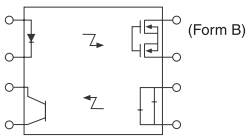

TS120 Pinout

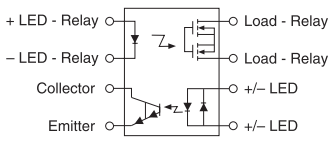

Telecom Multifunction Products

Designed specifically for the telecommunications industry, the Integrated Telecom Circuit (ITC) series is well suited for voice telephony and modem applications, providing most of the major functions required when designing DAA (Data Access Arrangement) or voice (FXO) line interface circuits.

Telecom Series (ITC) - Operational temperature range of -40^0 to 85^{0}C

	Relay Parameters			Octocoupler Parameters							
Part Number	**Load Voltage** V_P	**Load Current** mA	**On Resistance** Ω	**Input Control Current** mA	**Break-down Voltage** V	**Current Transfer Ratio** %	**Saturation Voltage** V	**Input Control Current** mA	**Isolation Voltage** V_{rms}	**Package [1] Type**	**Features**
ITC117P	350	120	15	5	20	33	0.5	6	3750	16-Pin SMT	
ITC117PL	350	120	15	5	20	33	0.5	6	3750	16-Pin SMT	Current Limit
ITC135P	350	120	15	5	20	33	0.5	6	3750	16-Pin SMT	Half-wave ringing detect
ITC137P	350	120	15	5	20	33	0.5	6	3750	16-Pin SMT	Full-wave ringing detect

[1] *For Package Type, SMT indicates Surface Mount Technology while TH indicates Through-hole.*

Block Diagrams

No zener protection
Bi-directional opto-input

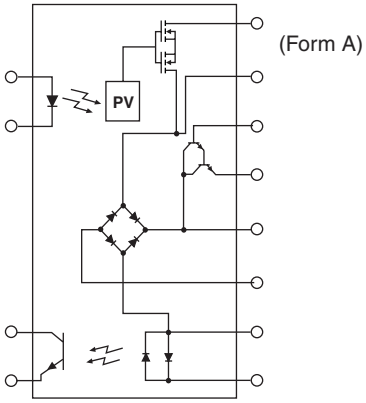

ITC117

Zener protection
Bi-directional opto-input

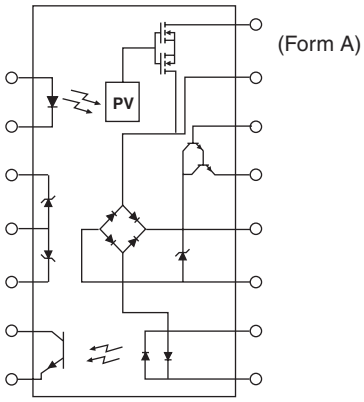

ITC137

Zener protection
Uni-directional opto-input

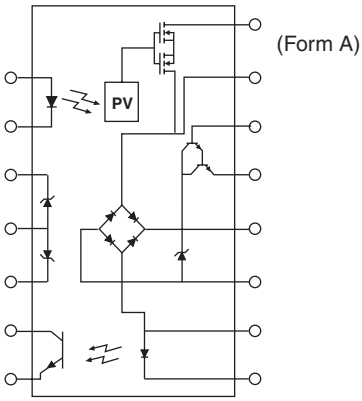

ITC135

xDSL/ISDN DC Termination ICs

The CPC1465 provides a polarity-insensitive DC termination for wetting (sealing) current on the CPE side conforming to ITU-T G.991.2 to eliminate corrosion on xDSL/ISDN lines. The CPC1465 has excellent linearity (70dB typ.) to minimize harmonic distortion and well-controlled turn-on and turn-off characteristics to minimize injecting impulse noise with in-band signal energy into the DSL channel.

This DC termination IC which interfaces with the tip/ring pair is rated at 300V and able to handle power cross and light-ning transients with appropriate protection. Manufactured in Clare's proven 320V Silicon-On-Insulator (SOI) process, the CPC1465 is packaged in a 16 pin SOIC or MLP.

Features

- Meets wetting (sealing) current requirements per ITU-T G.991.2
- Integrated bridge rectifier for polarity correction
- Uses inexpensive opto-coupler for DC signalling
- Electronic inductor, breakover, and latch circuits
- Current limiting and excess power protection circuits
- ANSI SHDSL and ISDN compatible
- MLT and SARTS compatible
- Excellent linearity (70dB typ.)

Applications

- ADSL2+ compatible with appropriate inductor
- SHDSL
- ISDN
- Router and bridge customer premises equipment
- Leased line equipment
- T1/E1 network line cards and repeaters
- Network Termination 1 (NT1) equipment
- Mechanized Loop Test (MLT) networks
- Switched Access Remote Test System (SARTS) networks

High-speed Line Interface Product

Part Number	Package
CPC1465D	16-pin SOIC
CPC1465M	**NEW -** 16-pin MLP

Block Diagrams

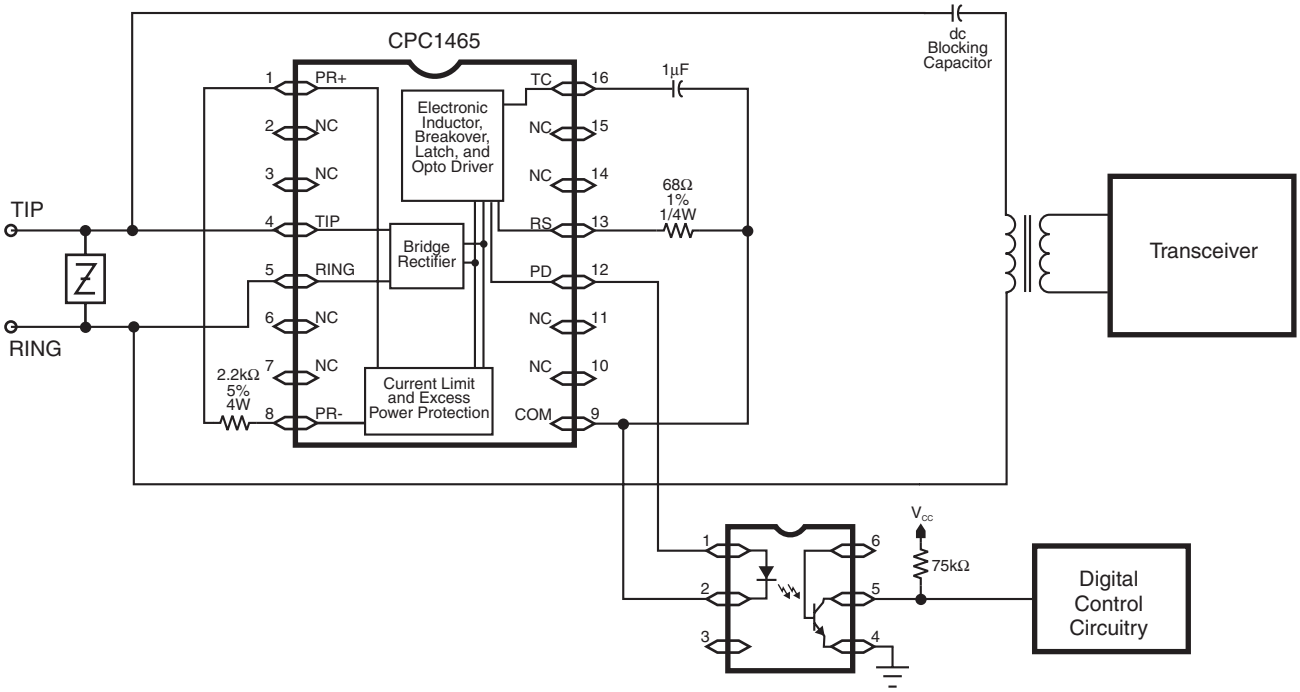

Line Card Access Switch (LCAS)

The Line Card Access Switch (LCAS) product family is an integral part of Clare's product portfolio for the telecommunications market. Clare's unique high-voltage Silicon-On-Insulator (SOI) process technology, manufactured in its state-of-the-art fab in Beverly, MA, provides the foundation for a multitude of silicon solutions that enable low power, high density line cards.

The LCAS product family consists of monolithic ICs that contain high-voltage switches for tip and ring line break, power ringing, line test access, test in access and ringing generator testing. They provide the necessary functions to replace all 2-Form-C electromechanical relays found on both traditional voice and integrated voice and data (IVD) line cards found in Central Office, Digital Loop Carriers and Channel Banks. With the introduction of the next generation CPC759x family, Clare is poised to continue its leadership in high voltage switching applications. New features include:

1) TTL compatible inputs
2) Smart logic for safe power up and hot plug state control
3) Increased dv/dt immunity.

Features

- Small surface mount SOIC or Micro Leadframe Package (MLP)
- Monolithic IC reliability
- Low, matched on-resistance
- Built-in zero-cross switching
- Impulse noise reduction
- Current limiting, thermal shutdown and SLIC protection
- Robust power cross and lightning surge performance
- Ultra-low power consumption of <10.5 mW
- Pin-to-pin compatibility to the Legerity 7581, 7582, and 7583 SOIC products

Applications

- VOIP gateways
- Central Offices (CO)
- Digital Loop Carriers (DLC)
- Digitally Added Main Line (DAML)
- Hybrid Fiber Coax (HFC)
- Fiber in the Loop (FITL)
- Pair Gain systems
- Channel banks
- PBX systems

	Switching Pairs							Protection Features				
Part Number	**# Switches**	**Break**	**Ringing**	**Test Out**	**Test in**	**Ringing Test**	**Zero-Cross Swichting**	**Diode Bridge**	**Protection SCR**	**Minimum Hold Current mA**	**Logic States**	**Package Type**
CPC7591xA	4	•	•				•	Half	•	110	3	16 SOIC or MLP
CPC7591xB	4	•	•				•	Full			3	16 SOIC or MLP
CPC7592xA	6	•	•	•			•	Half	•	60	4	16 SOIC or MLP
CPC7592xB	6	•	•	•			•	Full			4	16 SOIC or MLP
CPC7592xC	6	•	•	•			•	Half	•	110	5	16 SOIC or MLP
CPC7593xA	10	•	•	•	•	•	•	Half	•	110	7	20 or 28 SOIC or 28 MLP
CPC7593xB	10	•	•	•	•	•	•	Full			7	20 or 28 SOIC or 20 MLP
CPC7593xC	10	•	•	•	•	•	•	Half	•	110	8	20 or 28 SOIC or 20 MLP
CPC7593xD	10	•	•	•	•	•	•	Full			8	20 or 28 SOIC or 20 MLP
CPC7594xA	6	•	•		•		•	Half	•	110	4	16 SOIC or MLP
CPC7594xB	6	•	•		•		•	Full			4	16 SOIC or MLP
CPC7594xC	6	•	•		•		•	Half	•	110	4	16 SOIC or MLP
CPC7581xA	4	•	•				•	Half	•	60	3	16 SOIC or MLP
CPC7581xB	4	•	•				•	Full			3	16 SOIC or MLP
CPC7581xC	4	•	•				•	Half	•	110	3	16 SOIC or MLP
CPC7582xA	6	•	•	•			•	Half	•	60	4	16 SOIC
CPC7582xB	6	•	•	•			•	Full			4	16 SOIC
CPC7582xC	6	•	•	•			•	Half	•	110	5	16 SOIC
CPC7583xA	10	•	•	•	•	•	•	Half	•	100	7	20 or 28 SOIC
CPC7583xB	10	•	•	•	•	•	•	Full			7	20 or 28 SOIC
CPC7583xC	10	•	•	•	•	•	•	Half	•	100	8	20 or 28 SOIC
CPC7583xD	10	•	•	•	•	•	•	Full			8	20 or 28 SOIC

Line Card Access Switch (LCAS)
Micro Lead-frame Package (MLP) Products

With the introduction of the Micro Leadframe Package (MLP), the same functionality and performance now comes at a fraction of the size and makes 32 channel (or greater) line cards a reality. Even compared to fourth generation EMRs, these MLPs offer a dramatic area and height savings of 65% and 80% respectively.

All LCAS versions listed below are available in an MLP package. The last digit in the part number indicates the logic version and is the same for both the MLP and SOIC versions.

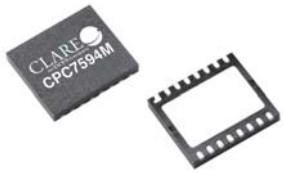

Part Number	Package	W mm	L mm	H mm	Area mm²	# of EMRs LCAS replaces	Area Savings vs EMRs
CPC7591Mx	16MLP	6	7	0.9	42	1	43%
CPC7592Mx	16MLP	6	7	0.9	42	2	71%
CPC7593Mx	28MLP	7	11	0.9	77	3	65%
CPC7594Mx	16MLP	6	7	0.9	42	2	71%

Block Diagram

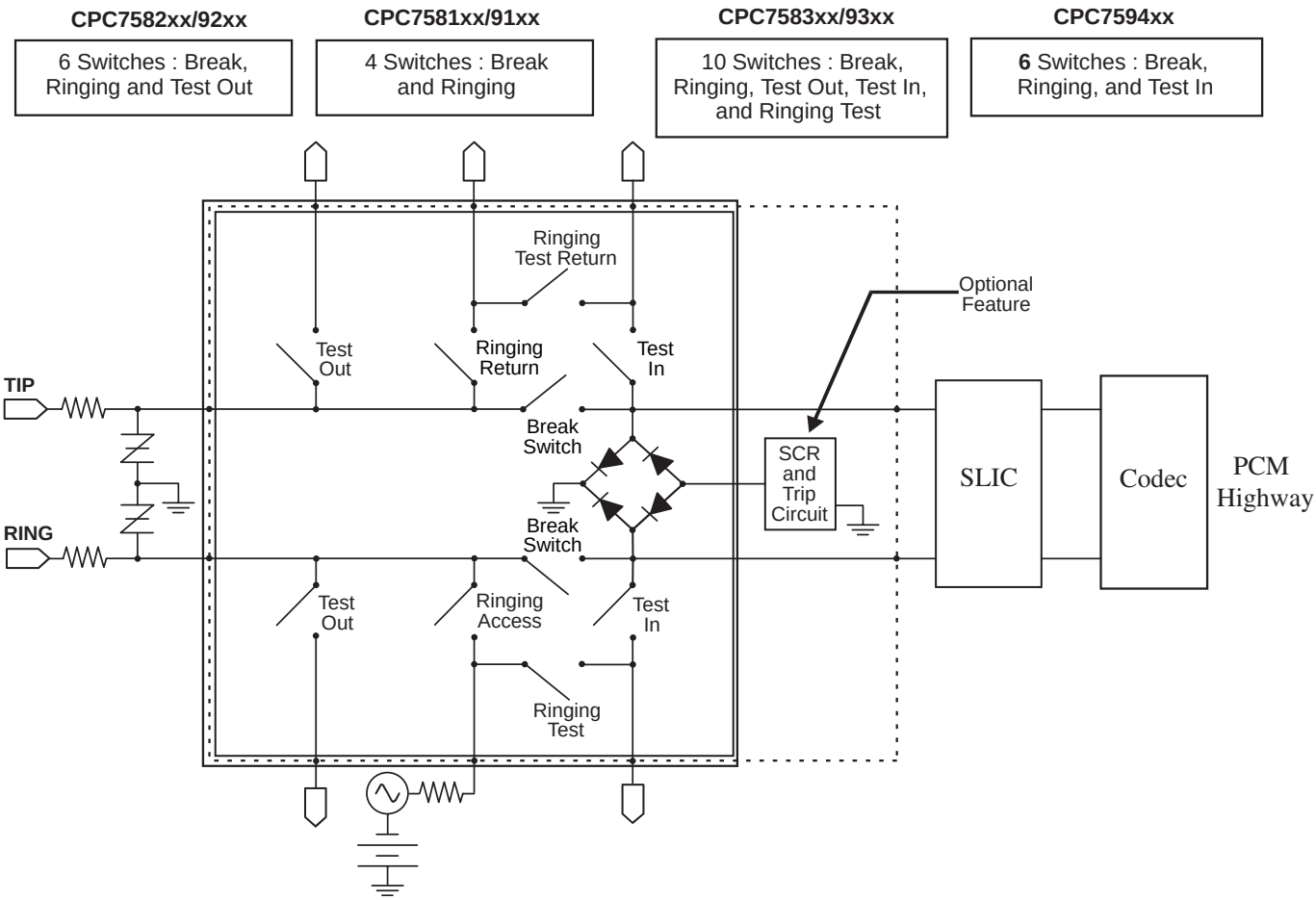

LITELINK™ Silicon DAA, Phone Line Interface

The LITELINK phone line interface is the industry's only single package silicon Data Access Arrangement, featuring a 32-pin, small outline, low profile, surface mount package. It is ideal for both voice and data (V.22bis to V.90/V.92) and applications in particularly dense circuit environments. The internal optical isolation barrier eliminates high cost transformer or capacitive isolation circuits. This solution saves cost relative to competitive circuits through reduced passive component count and smaller printed-circuit board space.

The 3kV$_{rms}$ internal isolation barrier exceeds all worldwide regulatory requirements. The optical isolation barrier yields low distortion performance necessary for high speed communications. In addition, the LITELINK application circuit is capable of surviving 6kV (10usec x 700usec) lightning surge waveforms making it the most robust silicon DAA on the market.

LITELINK offers the lowest operational phone line quiescent current. The device easily interfaces to commonly available standard single-ended or differential voice and modem codecs on the market. Contact Clare for information on codec reference designs that offer programmable AC termination impedance for global applications. LITELINK complies with international PSTN agency requirements.

The newest device is the CPC5622 which is part of the LITELINK III product family. It offers continuous Caller-ID (CID) signal reception which is ideal for telephony applications in countries where CID information is present before the ringing signal. The CPC5622 also offers both full and half wave ringing signal detection allowing the designer to chose the appropriate interface to the codec/DSP block.

Features

- Voice and data applications
- Modem DAA for speeds up to V.92
- Half-wave or full-wave ringing detection
- Worldwide telephone network compatibility
- Caller-ID reception
- Line side powered from telephone line
- 3.3 V to 5 V power supply
- Easy interface with modem ICs and voice CODECs
- High power transmit option for voice applications (>3 dBm)

Applications

- Computer telephony
- VoIP gateways
- PBXs
- Satellite set-top box
- V.92 modems
- Fax machines
- Voice mail systems
- Embedded modems
- Vending machines
- Automated banking
- Remote metering
- Surveillance
- Security systems

Part Number	Family	Isolation Voltage V_{rms}	Power Supply	MODE pin	Caller ID	Ringing Detect	Status
CPC5622	LITELINK III	3000	3.3V to 5V	Yes	Continuous	Half & Full wave	Recommended for New Designs
CPC5621	LITELINK III	3000	3.3V to 5V	Yes	Selectable	Full wave	Recommended for New Designs
CPC5620	LITELINK III	3000	3.3V to 5V	Yes	Selectable	Half wave	Recommended for New Designs
CPC5611	LITELINK II	1500	3.3V to 5V	No	Selectable	Full wave	
CPC5610	LITELINK II	1500	3.3V to 5V	No	Selectable	Half wave	
CPC5604	LITELINK I	1500	5V	No	Selectable	Half wave	

NOTE: *For the CPC5603 and CPC5602 detail, please see "FETs, N-Channel Depletion Mode" section on page 30.*

CPC5622 LITELINK III Block Diagram
CPC5622 LITELINK III Reference Design Schematic

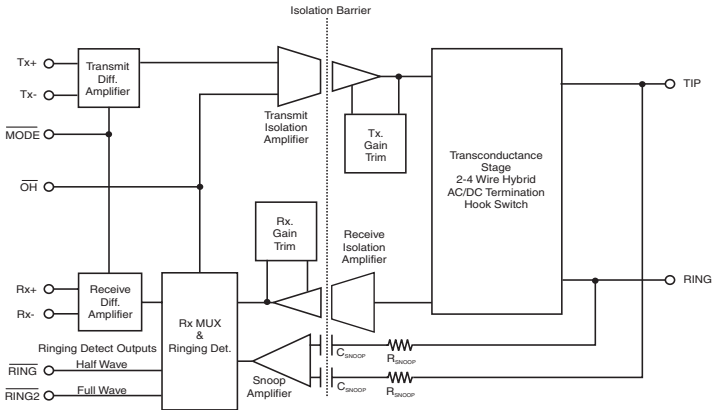

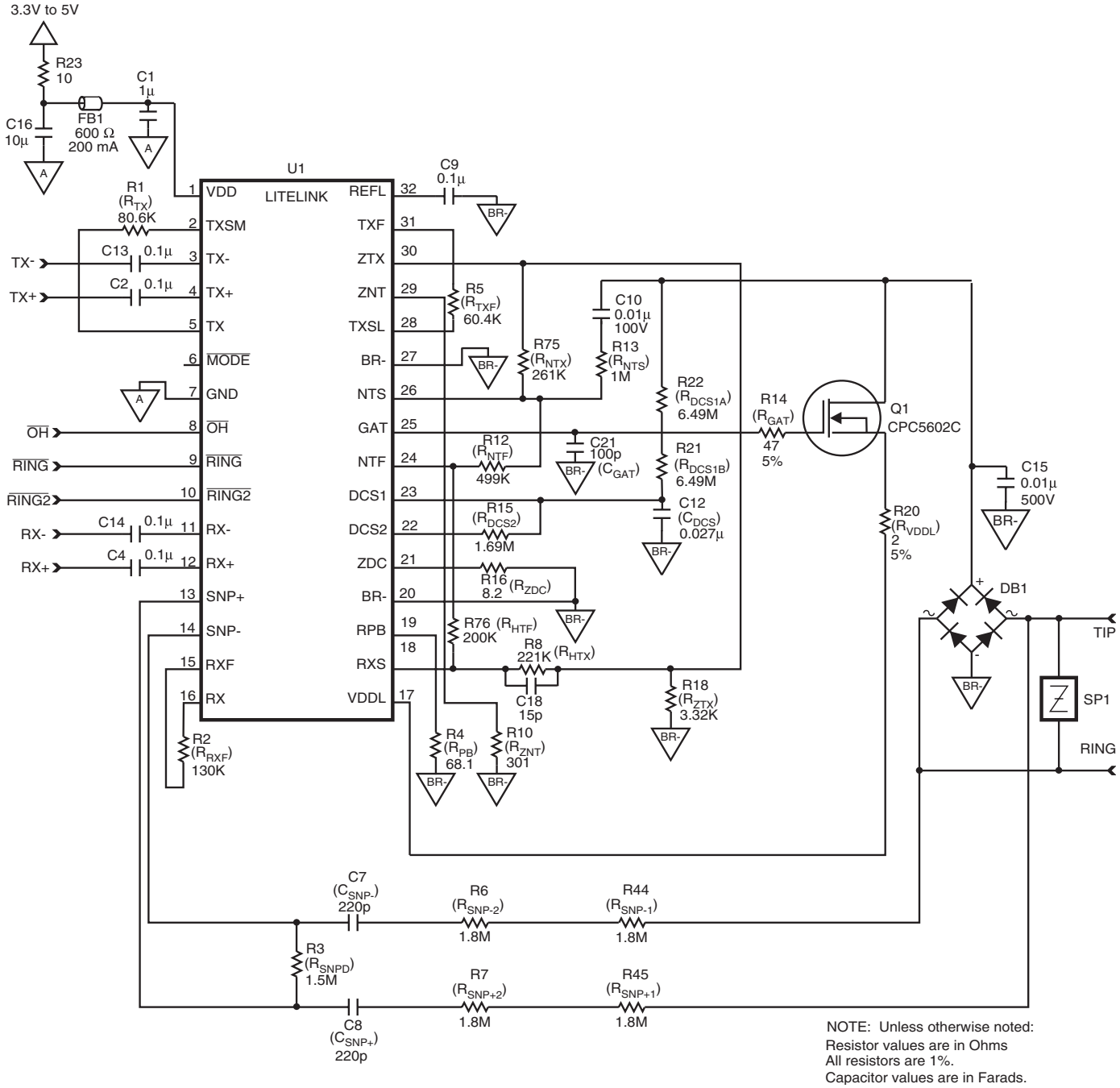

NOTE: Unless otherwise noted:
Resistor values are in Ohms
All resistors are 1%.
Capacitor values are in Farads.

Phone Line Monitor

Clare's CPC5710N 8-pin SOIC is a versatile building block for designing telephone line monitoring circuits. High common-mode rejection ratio (>40 dB) and high input impedance makes the CPC5710N an excellent choice for tip/ring voltage monitoring, battery presence detection, line-in-use detection (another-phone-off-hook), polarity reversal, display feature (Caller ID) signal reception, ringing detection and discrete voice recording.

The CPC5710N high impedance input circuit eliminates phone line monitoring discrete components that reduce central office (CO) battery voltage to Customer Premise Equipment (CPE) equipment. This allows the CPE equipment to work properly on long phone loops and meet difficult worldwide regulatory low CO voltage conditions. The high impedance resistive barrier application circuit is fully compliant to the EN60950 safety standard and meets the ITU-T K.21 over voltage and over current specifications. Common applications include telephony gateways, IP-PBX, computer telephony, embedded modems, set-top boxes, voice recording applications, and point-of-sale equipment.

Features

- Excellent common-mode rejection ratio (CMRR), >40 dB
- Supplied application circuits meet EN60950 Safety and ITU-T K.21 specification isolation requirements
- High input impedance circuit eliminates line voltage drop for better performance and compliance to worldwide specifications
- Small 8-pin SOIC
- Worldwide telephone network compatibility
- Full-wave ringing level detector comparator with internal threshold, large hysteresis, and logic-level output
- 3.3 V to 5 V operation
- High differential input impedance with very low common mode input impedance
- Fixed gain
- Differential or single-ended linear output
- TTL logic input
- CMOS logic output (TTL compatible)
- Virtually non-detectable in voice monitoring

Part Number	Power Supply
CPC5710	3.3V to 5V

Applications

In monitoring applications the CPC5710N can be used for:

- Display feature (caller ID) signal processing
- Line-in-use detection (another phone-off-hook)
- Ringing signal level detection
- Battery presence monitoring
- Tip and ring lead voltage monitoring
- Line polarity

APOH and Polarity Detection Application Circuit

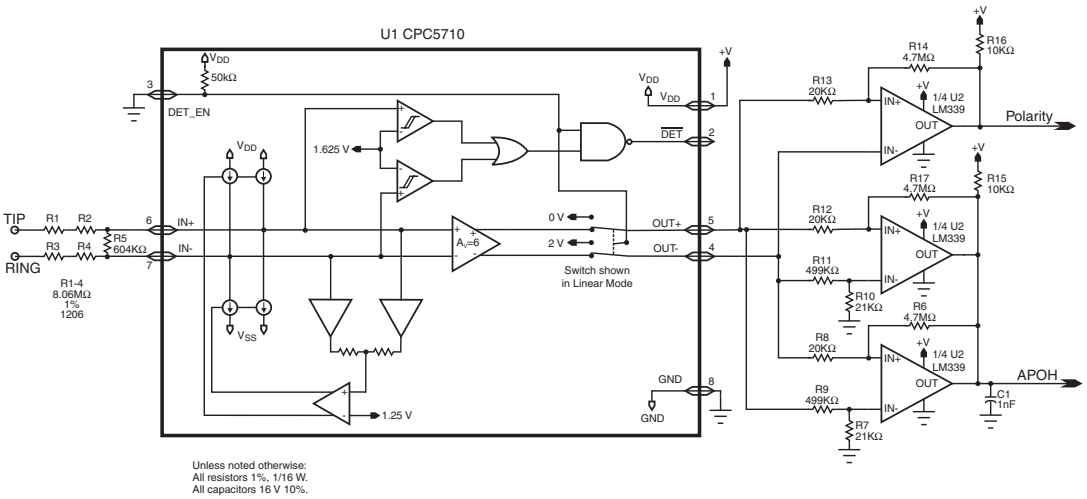

FETs, N-Channel Depletion Mode

Clare's N-channel depletion mode Field Effect Transistors (FETs) utilize a proprietary third generation vertical DMOS process. The third generation process realizes world class, high voltage MOSFET performance in an economical silicon gate process. The vertical DMOS process yields a robust device for high power applications with high input impedance. These highly reliable FET devices have been used extensively in Clare's solid state relays for industrial and telecommunications applications.

The normally-on MOSFETs are well suited for low cost, pre-regulator applications that are tolerant of high voltage drop and power dissipation between the power source and the output regulator stage. The pre-regulator is particularly effective as an inexpensive solution for filtering AC line voltage variations in non-isolated DC power supplies as compared to switch mode power supplies or step down transformers.

Part Number	BV_{DSX} V	$R_{DS(ON)}$ Max Ω	$V_{GS(off)}$ Min V	$V_{GS(off)}$ Max V	I_{DSS} @ V_{GS} = 0V Min mA	Package
CPC3703	250	4	-1.6	-3.9	300	SOT-89
CPC3710	250	10	-1.6	-3.9	220	SOT-89
CPC3714	350	14	-1.6	-3.9	240	SOT-89
CPC3720	350	22	-1.6	-3.9	130	SOT-89
CPC3730	350	30	-1.6	-3.9	140	SOT-89
CPC5602	350	14	-2.0	-3.6	130	SOT-223
CPC5603	415	14	-2.0	-3.6	130	SOT-223

Application - Pre-regulator Non-isolated Power Supply with Depletion Mode FET

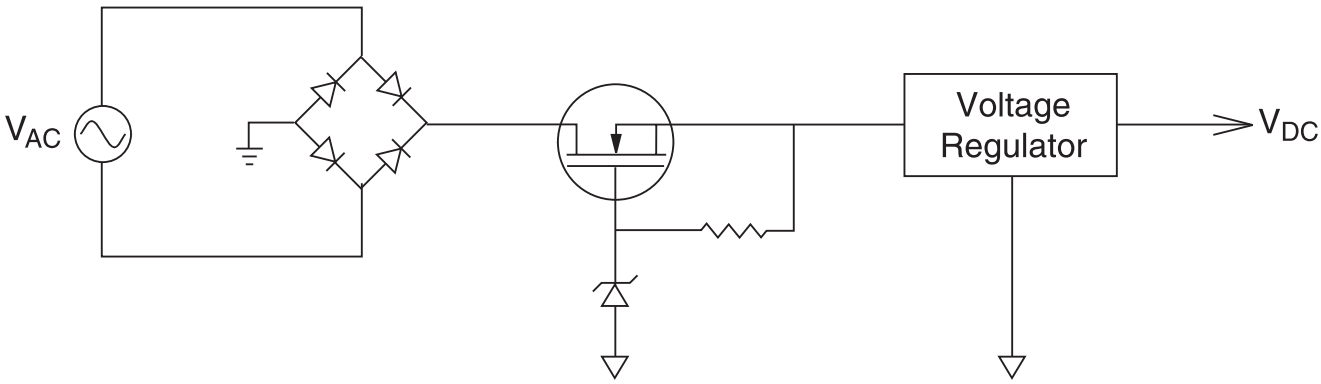

Data Access Arrangement (DAA) Modules

CLARE
An IXYS Company

The Cybergate family is Clare's turnkey modular DAA solution. The V.34 family provides the circuitry required in a single, completely functional DAA circuit in a 1.07" x 1.07" x 0.4" plastic module. This plug-and-play design allows the user to choose the necessary options to minimize costs, and in turn, maximize value. Standard features include surge protection, transient protection zeners, ringing detection, hook-switch circuitry, gyrator circuitry (impedance balancing) and a transformer. Caller-ID (CID) and loop current detection are also available as options.

Features

- 28.8kbps (except for CYG2911 at 9.6kbps)
- Optional caller ID and loop current sense
- Ringing detection
- Low power hookswitch
- Surge protection
- Low THD
- Gyrator circuitry
- Meets most regulatory agency requirements

Applications

- Modems
- Remote data acquisition
- Fax machines
- Security/metering
- Computer telephony
- PBX
- Voice mail systems

Cybergate Data Access Arrangements

Part Number	Region	Hook Switch Resistance Ω	DC Loop Current mA	Return Loss (min.) dB	Insertion Loss (max.) TX-Transmit RX-Receive V_{rms}	Ringing Voltage Detection Range V_{rms}	Isolation Voltage	Features: Ringing Detection: Full Wave	Features: Ringing Detection: Half Wave	Features: Caller-ID	Features: Loop Current Detect	Features: 911 Emergency	Features: 2-4 Wire Conversion
CYG2000	N. America Asia	15	20-120	18	Tx 7 Rx 7	20-150	1000		•				
CYG2001	N. America Asia	15	20-120	18	Tx 7 Rx 7	20-150	1000	•					
CYG2010	N. America Asia	15	20-120	18	Tx 7 Rx 7	20-150	1000		•		•		
CYG2011	N. America Asia	15	20-120	18	Tx 7 Rx 7	20-150	1000	•			•		
CYG2020	N. America Asia	15	20-120	18	Tx 7 Rx 7	20-150	1000		•	•			
CYG2021	N. America Asia	15	20-120	18	Tx 7 Rx 7	20-150	1000	•		•			
CYG2030	N. America Asia	15	20-120	18	Tx 7 Rx 7	20-150	1000		•	•	•		
CYG2031	N. America Asia	15	20-120	18	Tx 7 Rx 7	20-150	1000	•		•	•		
CYG2100	Europe	35	5-120	14	Tx 7 Rx 7	29-150	1500		•				
CYG2110	France	35	5-120	14	Tx 7 Rx 7	29-150	1500		•				
CYG2111	CTR-21	35	5-120	14	Tx 7.5 Rx 7.5	29-150	1500		•				
CYG2120	Spain	35	5-120	14	Tx 7 Rx 7	28-150	1500		•				
CYG2217	N. America Asia	15	20-120	39	Tx 7 Rx 1	20-150	1000		•				•
CYG2218	N. America Asia	15	20-120	39	Tx 1 Rx 1	20-150	1000		•				•
CYG2300	Germany	-	5-120	14	Tx 7 Rx 7	29 MIN	1500		•				
CYG2320	Australia	-	5-120	14	Tx 7 Rx 7	29 MIN	1500		•				
CYG2911	N. America Asia	15	20-120	18	Tx 9 Rx 9	20-150	1000		•	•		•	

**All of the parts listed are in a DIP package, operate using a 5V power supply, have a minimum On-hook impedance of 10 MΩ, Maximum Total Harmonic Distortion (THD) of 0.01% and a tip to ring surge protection voltage of 300V.*

Embedded Modem Module (EMM)

The Embedded Modem Module combines a datapump and microcontroller with the Data Access Arrangement (DAA) to deliver an all-in-one solution for V.22bis modem transaction-oriented applications. This plug-and-play module provides a total solution complete with transferable FCC registration. It supports a standard serial V.24 TTL interface to the DTE equipment. The CPC2400E features a quick handshake time of 1.6 seconds. This offers a clear advantage for short connection sessions when compared to V.34 and V.90 modems which have a data handshake period greater than 10 seconds.

Features

- Easy integration and installation
- Small footprint of 1.00” x 2.50”
- Low power consumption
- 5V Power supply operation
- Supports V.22bis, V.22, V.23
- FCC part 15B compliant
- FCC part 68 user transferable registration
- UL Approved

Applications

- Point-of-Sale (POS)
- Gaming equipment
- Utility metering
- Lock boxes
- Remote monitoring
- Embedded applications
- Medical appliances

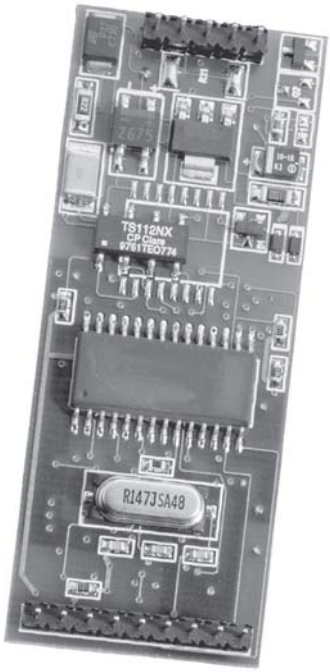

Block Diagram

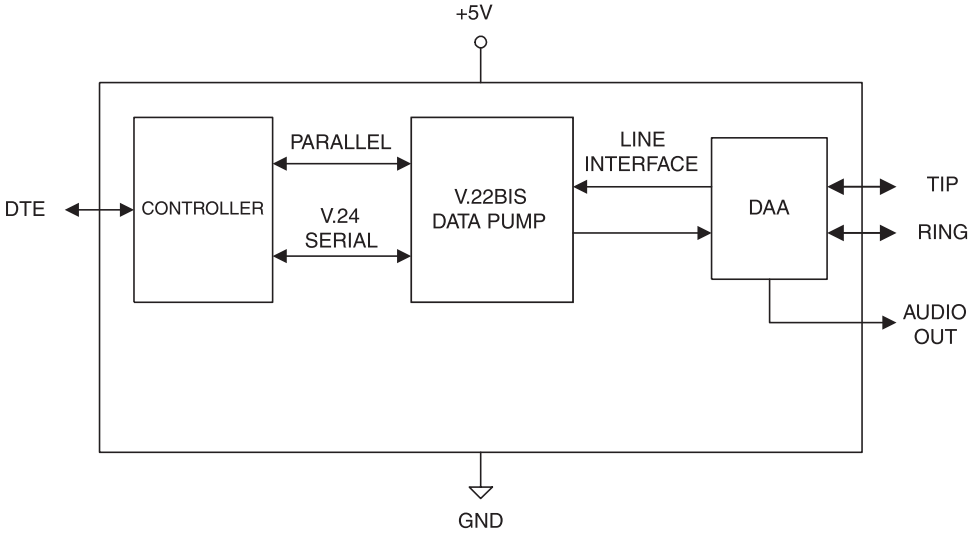

Pin Diagram

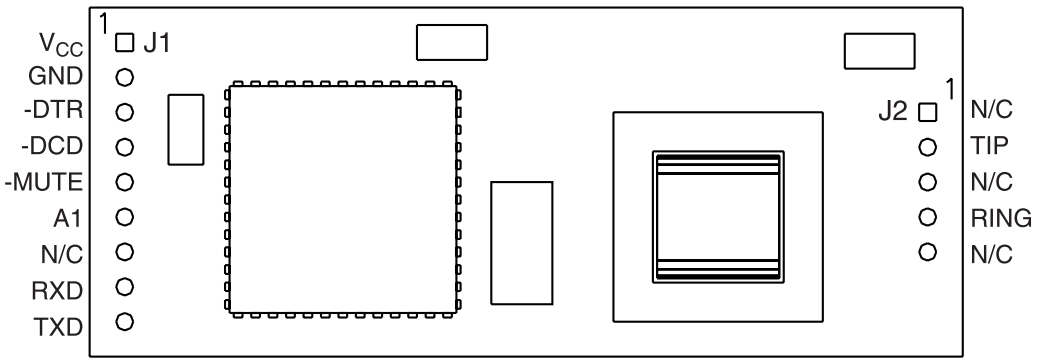

Tone Signaling Products

Tone Signaling Products include Dual Tone Multi-Frequency (DTMF) Receivers, MF Trunk Signaling ICs and Call Progress Detectors, and Generators and Hook Switch Status Devices.

Call Progress Detectors and Generators

Clare's family of Call Progress Detectors and Generators provides an inexpensive method of detecting and generating common call progress tones including busy tone, dial tone, call waiting tones and others. The family includes both an inexpensive band detector and precise call tone detectors that detect individual tones. Detectors are available in both DIP and SOIC packages and operate on a 3 V to 5 V supply. The call progress generator allows for a simple method of providing dial tone busy tone and other call progress tones in applications where a POTS interface is required such as VoIP or other network gateways.

Features

- Receive and generate common call progress tones
- Detectors operate with a single 3V to 5V supply
- Linear input (detectors) and output (generator)
- Inexpensive band detector with wide dynamic range (>38dB)
- Low power consumption
- Detectors available for both common call progress and SIT tones
- Available in both DIP and SOIC packages

Applications

- PBX circuits
- Billing systems
- Test equipment
- Point of Sale terminals
- Pay telephones

Part Number	Function	Detection Frequencies: Band 350 + 440Hz	Dial Tone 440 + 480Hz	Audible Ringing 480 + 620Hz	Busy Tone	Special Information Tones (SIT)	Package Type
	315-640Hz						
M-980-02	Detector	•					8-Pin TH, 16-Pin SMT
M-982-02	Detector		•	•	•		22-Pin TH, 20-Pin SMT
M-984-02	Detector					•	14-Pin TH, 16-Pin SMT
M-985-01	Detector		•	•	•	•	22-Pin TH, 20-Pin SMT
M-991	Generator		•	•	•		14-Pin TH, 16-Pin SMT

Block Diagrams

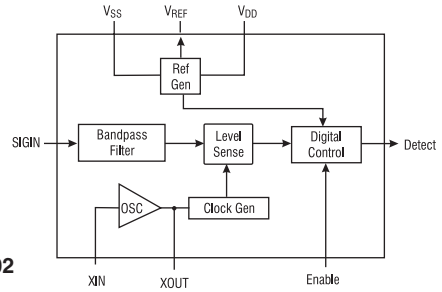

M-980-02

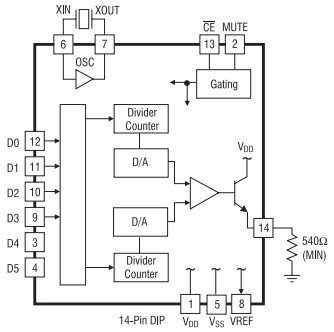

M-980-01

Hook Switch Status Devices

M-949-01 Line Sense Relay
- Senses telephone line current from 18 to 125 mA
- Used by control circuitry for on-hook/off-hook monitoring, switch hook flash detection and rotary dial pulse
- Provides 1500V_{DC} coil-to-contact isolation
- Includes 1-Form-A relay contact
- Applications include central office products, PBX and key systems, rotary dial monitoring devices

M-949-11 Balanced Dual Coil Telephone Line Current Sensing Relay
- Senses telephone line current from 15 to 200mA
- Used by control circuitry for on-hook/off-hook monitoring, switch hook flash detection and rotary dial pulse
- Meets high isolation voltage requirement of 4000V
- Meets UL and British Standard specifications
- Includes 1-Form-A relay contact

M-959 Dial Pulse Counter and Hook Status Monitor
- Independent hook status monitoring
- Time-guarded dial pulse counting
- 10 or 20 PPS dialing speeds pin selectable
- Valid data output strobe

Block Diagram

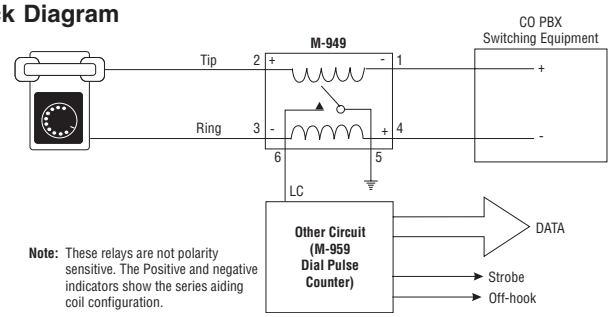

DTMF Receiver M8870

DTMF signaling is used in tone dialing applications where a direct inexpensive method of receiving DTMF digits is required. The M-8870-01 device uses an inexpensive color burst crystal.

Adjustable guard times provide flexibility for fast operation or additional accuracy in receiving DTMF dialing tones.

Features

- 5 Volt receivers
- Adjustable receiver guard time
- Central Office quality and performance

Applications

- PBX and Central Office tone receivers
- Security systems
- Credit card verification
- Fax machines
- Pay telephones
- Remote control
- Remote data entry

Block Diagram M 8870

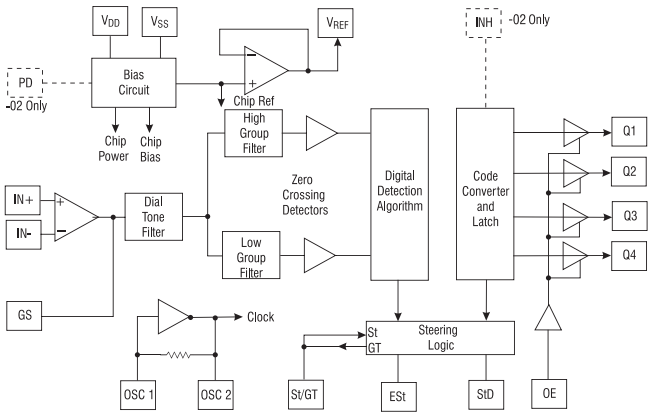

MF Trunk Signaling ICs

MF signaling ICs, available in a variety of formats, eliminate the need for additional software required to implement MF signaling protocols in trunk circuits. Used in MF trunk signaling applications, these products include a family of PCM digital MF tranceivers in a variety of formats. Signaling formats include R1 (µ Law) and R2 (A Law) Specification.

The M-993 is a stand-alone generator and provides a simple inexpensive method of generating analog R1 MF signaling tones. Already used in thousands of systems worldwide, these products give the system designer a proven method of providing MF signaling capability.

Features

- Direct PCM interface to chip
- Manual or Compelled Mode operation for R2 Signaling
- 2.048 MHz clocking
- Dual Channel
- Microprocessor read/write interface
- R1 and R2 formats provided

Applications

- Trunk Circuits requiring MF trunk signaling in R1 or R2 signaling formats

Part Number	Function	CCITT R1	CCITT R2	A Law PCM	µ Law PCM	PCM in/Out	Analog out	PackageType
M-986-2A1P	Transceiver	•		•	•	•		40-Pin TH, 44-Pin SMT
M-986-2R2P	Transceiver		•	•		•		40-Pin TH, 44-Pin SMT
M-993	Generator	•					•	14-Pin DIP TH

Block Diagram

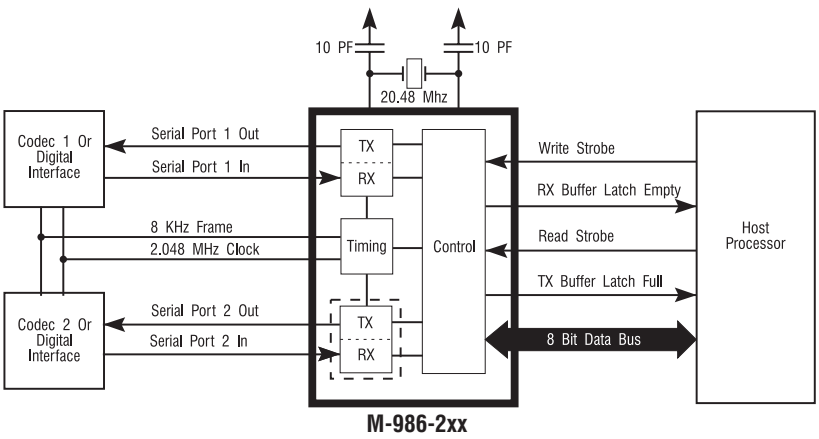

High Voltage Products - Analog Switches and Display Drivers

The high voltage process technology used on these devices is Clare's reliable BCDMOS on SOI (Silicon On Insulator). This process offers unique performance features such as multiple 300V open drain FET devices and 200V bi-directional analog switch cells with 1 Amp peak current capability.

NEW - CPC7220/CPC7221 High Voltage 8 Channel Analog Switch

The CPC7220 and CPC7221 are low charge injection 8-channel high-voltage analog switch integrated circuits (ICs). These devices are capable of switching large load voltages and have a flexible load voltage range, e.g. V_{PP}/V_{NN} : +40V/-160V or +100V/-100V. Switch manipulation is managed by an 8-bit serial to parallel shift register whose outputs are buffered and stored by an 8-bit transparent latch. Level shifters buffer the latch outputs and operate the high voltage switches.

Block Diagram

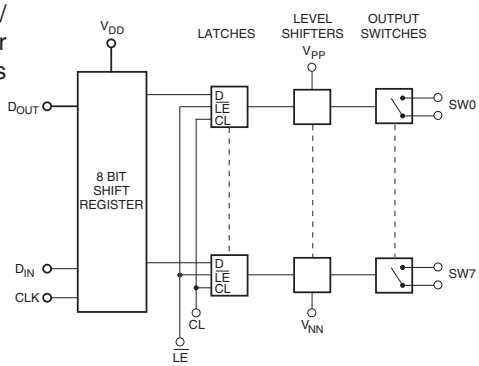

Features

- DC to 10MHz analog signal frequency
- 200 V peak to peak output switches
- Low quiescent power dissipation (< 1 µA typical)
- Output on-resistance typically 20 Ω
- TTL I/O's for 3.3 V interface
- 28-Pin SOIC Package

Applications

- Ultrasound imaging
- Printers
- Industrial controls and measurement

NEW - CPC6530 32-Channel Serial To Parallel Converter With Open Drain Outputs

The CPC6530 is a low-voltage serial input to high-voltage parallel output converter with open drain outputs. This device consists of a 32-bit shift register, 32 latches, and control logic to perform the polarity select and blanking of the outputs. The open drain n-channel MOSFETS have a 300V breakdown voltage rating and are capable of sinking 100mA of current.

Block Diagram

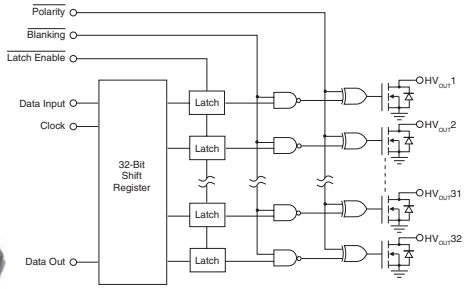

Features

- 300V open drain MOSFETs
- 100mA minimum current sink
- 8 MHz shift register
- Polarity and Blanking inputs
- CMOS compatible inputs
- 44-lead surface mount package

Applications

- EL Display Driver
- Inkjet and electrostatic print heads
- Plasma, vacuum fluorescent and large matrix LCDs

NEW - CPC6826 High Voltage EL Lamp Driver

The CPC6826 is an electroluminescent (EL) lamp driver designed for applications operating from an input supply voltage range of 1.8 V to 3.5 V. The architecture features an integrated boost switching supply with an H-bridge driver circuit to illuminate the EL lamp. Three passive components, an inductor, a capacitor and a diode are required to complete the boost switcher circuit. The internal high voltage H-bridge provides a nominal ±75 V output between pins V_A and V_B.

Block Diagram

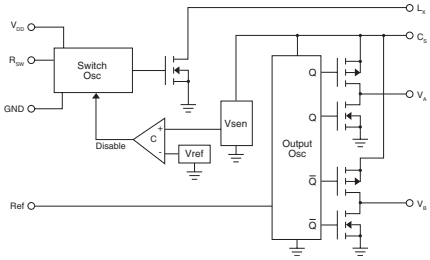

Features

- 1.8 V to 3.5 V supply voltage
- DC to AC conversion
- Adjustable output frequency
- Adjustable switch frequency
- Output voltage regulation
- 150V_{PP} H-Bridge drive output
- Enable/disable function
- MSOP-8 Package

Applications

- Mobile cellular phones
- Keypad illumination
- Instrument panels

Optically Isolated Gate Driver Circuits

The CPC1580 and CPC1590 are high speed Optically Isolated Gate Driver ICs. On-chip circuitry charges an external capacitor from the AC load voltage which eliminates the need for an external IC power supply. The Driver IC is ideal for low duty cycle switching applications.

Features

- Low drive power requirements (TTL/CMOS Compatible)
- Fast switching T_{ON}/T_{OFF} 20/200 µsec
- Load Voltages up to 200V
- No external IC power supply

Applications

- Instrumentation
  - Multiplexers
  - Electronic switching
  - I/O Subsystems
  - Meters (Watt-Hour, Water, Gas)
- Medical Equipment (patient/equipment isolation)
- Security
- Aerospace
- Industrial controls

Operational temperature range of -40⁰ to 85⁰C

Part Number	Input Control Current	Gate Voltage @ I_F = 5mA (V_G)	Load Voltage (V_D)	Regulated Voltage Capacitor (V_{CAP})	Nominal Switching Speeds T_{ON}/T_{OFF} (ms)	Isolation Voltage (V_{rms})	Package [1] Type	Features
CPC1580	5	7.3 to 12	50	49.9	0.04 / 0.7	3750	8-Pin SMT	**NEW**
CPC1590	5	7.2 to 9.1	200	20	0.02 / 0.2	3750	8-Pin SMT	**NEW**

[1] For Package Type, SMT indicates Surface Mount Technology while TH indicates Through-hole.

Block Diagrams

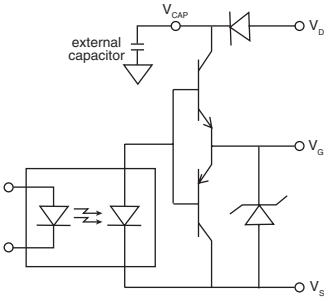

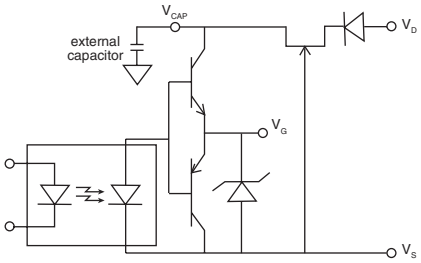

Optically Isolated Dual MOSFET Gate Driver

The FDA215 is a Dual Optically Isolated Photodiode Array. The light activated array produces an open circuit voltage of 8 Volts. This device is suited for use in discrete solid state relay designs.

Features

- Isolated 5V photovoltaic output
- May be configured for AC and DC switching
- Floating outputs for parallel or series configuration

Applications

- MOSFET Driver
- Programmable control
- Process control
- Instrumentation

Operational temperature range of -40⁰ to 85⁰C

Part Number	Input Control Current I_F (mA)	Open Circuit Voltage (V_{OC})	Nominal Short Circuit Current I_{SC} (µA)	Switching Speeds T_{ON}/T_{OFF} (ms)	Isolation Voltage (V_{rms})	Package [1] Type
FDA215	5	5	2.5	5 / 5	3750	8-Pin SMT, TH

[1] For Package Type, SMT indicates Surface Mount Technology while TH indicates Through-hole.

Block Diagram

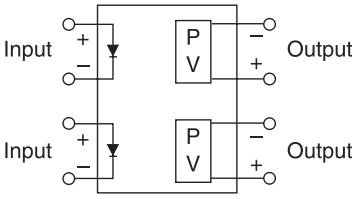

Solar Cell Products

The Clare Solar Cell is a revolutionary new product offering that addresses the diverse needs and applications of the growing low power solar energy market. This technology development is based on Clare's strength in photovoltaic silicon processing and IC packaging. The Solar Cell product family offers several open circuit voltage levels (4, 8 or 16 Volts) when activated by natural or artificial light. These voltage levels correlate to common circuit board power supply voltages making the solar cell ideal for battery charging applications and trickle charge power sources. Standard JEDEC SOIC package styles make these Solar Cell products ideal for prototype and high volume production usage.

Clare's flexible Solar Cell architecture facilitates product family growth by means of its scalable technology thus paving the way for future solar cell offerings with different voltage and current ratings. Additionally, since there is excellent isolation between the various circuit elements on the Solar Cell's photovoltaic die, it is possible to add options such as power management or logic control circuitry with minimal incremental cost to the product.

Features

- Select from multiple voltage and current outputs
- 4 V - 16 V output
- 12 µA - 100 µA current output
- Provides true wireless power
- Triggers with natural sunlight or artificial light
- Semiconductor miniature size and reliability

Applications

- Portable Electronics
- Solar Battery Chargers
- Battery Operated Equipment
- Consumer Electronics
- Off Grid Installation
- Wireless Sensors and Detection
- Self Powered Sunlight/ Light Detection
- Self Powered Products
- Remote Installation

Product Part Number	Open Circuit Voltage (V)	Short Circuit Current (µA)	SOIC Package
CPC1822	4	50	8-Pin
CPC1824	4	100	16-Pin
CPC1831	8	25	8-Pin
CPC1832	8	50	16-Pin
CPC1840	16	12	8-Pin
CPC1841	16	25	16-Pin

Block Diagram

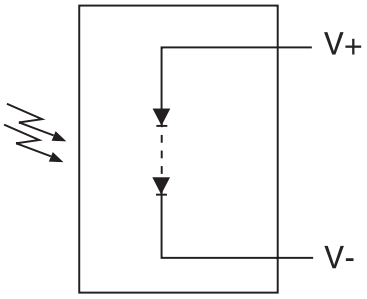

ISOPLUS220™

Product	Type	V_{DSS}	$I_{D(cont)}$	$R_{DS(on)\,max}$
MOSFETs				
Trench Gate	**IXUC 100N055**	55 V	100 A	6.1 mΩ
	IXTC 240N055T	55 V	140 A	3.3 mΩ
	IXTC 280N055T	55 V	164 A	2.8 mΩ
	IXUC 200N055	55 V	200 A	4.0 mΩ
	IXTC 220N075T	75 V	125 A	4.0 mΩ
	IXTC 250N075T	75 V	150 A	3.4 mΩ
	IXUC 160N075	75 V	160 A	5.1 mΩ
	IXTC 200N085T	85 V	110 A	5.0 mΩ
	IXTC 230N085T	85 V	136 A	3.3 mΩ
	IXUC 60N10	100 V	60 A	12.8 mΩ
	IXTC 180N10T	100 V	100 A	6.1 mΩ
	IXTC 200N10T	100 V	118 A	5.4 mΩ
	IXUC 120N10	100 V	120 A	7.3 mΩ
Polar	**IXFC 110N10P**	100 V	60 A	15 mΩ
	IXFC 96N15P	150 V	96 A	24 mΩ
	IXFC 74N20P	200 V	74 A	34 mΩ
	IXFC 52N30P	300 V	52 A	66 mΩ
	IXFC 16N50P	500 V	10 A	400 mΩ
	IXFC 26N50P	500 V	15 A	230 mΩ
	IXFC 36N50P	500 V	19 A	170 mΩ
	IXFC 14N60P	600 V	8 A	600 mΩ
	IXFC 22N60P	600 V	12 A	360 mΩ
	IXFC 30N60P	600 V	24 A	270 mΩ
	IXFC 10N80P	800 V	5 A	1100 mΩ
	IXFC 12N80P	800 V	7 A	850 mΩ
	IXFC 14N80P	800 V	8 A	700 mΩ
	IXFC 16N80P	800 V	9 A	600 mΩ
	IXFC 20N80P	800 V	13 A	500 mΩ
CoolMOS	**IXKC 20N60C**	600 V	14 A	190 mΩ
	IXKC 40N60C	600 V	28 A	96 mΩ
	IXKC 13N80C	800 V	13 A	290 mΩ
	IXKC 25N80C	800 V	25 A	150 mΩ

Product	Type	V_{CES}	I_C	$V_{CE(sat)max}$	t_{fi}
IGBTs	**IXGC 16N60B2**	600 V	28 A	2.3 V	80 ns
	IXGC 16N60C2	600 V	20 A	3.0 V	35 ns
	IXGC 16N60C2D1	600 V	20 A	3.0 V	35 ns

Product	Type	V_{RRM}	I_F	V_F	t_{fi}
Dual Ultrafast Diodes			$T_{VJ} = 125°C$		
Series connected					
	DSEE 6-06CC	600 V	10 A	1.35 V	20 ns
	DSEE 8-06CC	600 V	10 A	1.30 V	30 ns
	DSEE 15-06CC	600 V	15 A	1.25 V	30 ns
	DSEE 29-06CC	600 V	30 A	1.01 V	30 ns
	DSEE 8-08CC	800 V	10 A	1.12 V	30 ns
	DSEE 15-12CC	1200 V	15 A	1.50 V	35 ns
	DSEE 29-12CC	1200 V	30 A	1.75 V	30 ns
Common anode connected			$T_{VJ} = 150°C$		
	DSEA 16-06AC	600 V	2x10 A	1.42 V	35 ns
	DSEA 16-06BC	600 V	2x10 A	1.66 V	30 ns
	DSEA 29-06AC	600 V	2x15 A	1.34 V	35 ns
	DSEA 59-06BC	600 V	2x30 A	1.56 V	30 ns

If your application requires electrically isolated TO-220 device, then it needs ISOPLUS220™ parts. We have replaced the normal copper lead frame with our proprietary lead frame to give it -

- Superior heat transfer junction to heatsink
- 2500 V isolation voltage
- Higher current and power control

Available products include
- MOSFETs
- IGBTs
- FREDs
- SCRs
- Rectifiers
- Schottky diodes

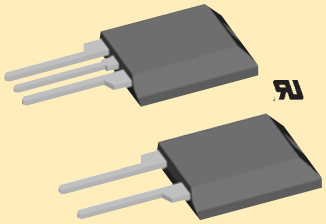

Product	Type	V_{RRM}	I_F	V_F	t_{fi}
Dual Ultrafast Diodes			$T_{VJ} = 150°C$		
Common cathode connected					
	DSEC 16-06AC	600 V	2x10 A	1.42 V	35 ns
	DSEC 16-06BC	600 V	2x10 A	1.66 V	30 ns
	DSEC 29-06AC	600 V	2x15 A	1.34 V	35 ns
	DSEC 59-06BC	600 V	2x30 A	1.56 V	30 ns
Schottky Diode			$T_{VJ} = 125°C$		
	DSS 20-01AC	100 V	20 A	0.76 V	
GaAs Schottky Diode					
Series connected			$T_{VJ} = 125°C$		
	DGSS 6-06CC	600 V	6 A	1.20 V	
	DGSS 10-06CC	600 V	10 A	1.20 V	
	DGSS 20-06CC	600 V	20 A	1.20 V	
Rectifier Diode			$T_{VJ} = 150°C$		
	DSI 30-12AC	1200 V	30 A	1.25 V	
Series connected					
	DSP 8-12AC	2x1200 V	2x10 A	1.21V	

Product	Type	V_{RRM}	I_T	V_T
Thyristor			$T_{VJ} = 125°C$	
	CS 19-12ho1C	1200 V	30 A	1.74 V
	CS 29-12io1C	1200 V	45 A	1.56 V

See alphanumeric index for the page number of the particular product.

ISOPLUS247™, ISO264 and ISOPLUS264™

Isolating TO-247 power devices has never been easier than using our new **ISOPLUS247™** products. They're internally isolated with our proprietary "integrated leadframe" using our DCB ceramic substrate as part of the package!

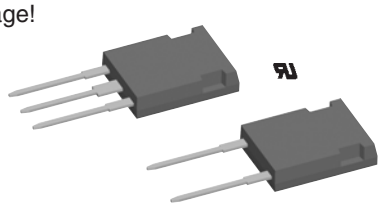

The result -
- **Excellent thermal transfer** (R_{thJS})
- **High Isolation Voltage** (V_{ISOL} > 2500 V)
- **Increased Temperature & Power Cycling** capability
- **Reduced EMI/RFI** emissions due to lower stray capacitance (junction to heatsink).

Type	V_{DSS}	$I_{D(cont)}$	$R_{DS(on)\ max}$
MOSFETs in ISOPLUS247™			
IXTR 200N10P	100 V	120 A	0.008 Ω
IXFR 200N10P	100 V	120 A	0.0075Ω
IXFR 180N15P	150 V	180 A	0.013 Ω
IXFR 140N20P	200 V	90 A	0.022 Ω
IXFR 102N30P	300 V	60 A	0.036 Ω
IXFR 140N30P	300 V	82 A	0.024 Ω
IXFR 36N50P	500 V	19 A	0.17 Ω
IXFR 44N50P	500 V	24 A	0.15 Ω
IXFR 64N50P	500 V	35 A	0.1 Ω
IXFR 80N50P	500 V	45 A	0.07 Ω
IXFR 40N50Q2	500 V	29 A	0.14 Ω
IXFR 66N50Q2	500 V	50 A	0.074 Ω
IXFR 30N60P	600 V	15 A	0.27 Ω
IXFR 36N60P	600 V	20 A	0.2 Ω
IXFR 48N60P	600 V	32 A	0.15 Ω
IXFR 64N60P	600 V	36 A	0.1 Ω
IXKR 40N60C	600 V	38 A	0.07 Ω
IXFR 20N80P	800 V	10 A	0.5 Ω
IXFR 24N80P	800 V	14 A	0.4 Ω
IXFR 32N80P	800 V	20 A	0.27 Ω
IXFR 44N80P	800 V	26 A	0.19 Ω
IXFR 38N80Q2	800 V	28 A	0.3 Ω
IXKR 25N80C	800 V	25 A	0.15 Ω
IXFR 24N90Q	900 V	24 A	0.4 Ω
IXFR 4N100Q	1000 V	3.5 A	3 Ω
IXFR 14N100Q2	1000 V	9.1 A	1 Ω
IXFR 21N100Q	1000 V	19 A	0.5 Ω
IXFR 24N100	1000 V	28 A	0.39 Ω
MOSFETs in ISOPLUS264™			
IXFL 100N50P	500 V	70 A	0.05 Ω
IXFL 80N50Q2	500 V	80 A	0.066 Ω
IXFL 82N60P	600 V	54 A	0.08 Ω
IXKL 60N80P	800 V	42 A	0.14 Ω
IXFL 38N100Q2	800 V	22 A	0.28 Ω
IXKL 34N100	800 V	34 A	0.28 Ω
MOSFETs in ISO264™			
IXKG 25N80C	800 V	25 A	0.15 Ω

Type	V_{CES}	I_C	$V_{CE(sat)\ max}$	t_{fi}
IGBTs in ISOPLUS247™				
IXGR 40N60B2	600 V	60 A	1.9 V	82 ns
IXGR 40N60C2	600 V	56 A	2.7 V	32 ns
IXGR 50N60B2	600 V	68 A	2.2 V	65 ns
IXGR 50N60C2	600 V	75 A	2.7 V	48 ns
IXGR 60N60B2	600 V	75 A	2.0 V	100 ns
IXGR 60N60C2	600 V	75 A	2.7 V	35 ns
IXGR 120N60C2	600 V	75 A	2.7 V	45 ns
IXGR 120N60B	600 V	156 A	2.1 V	160 ns
IXGR 35N120B	1200 V	70 A	3.3 V	160 ns
IGBTs in ISOPLUS264™				
IXEL 40N400	4000 V	62 A	4.4 V	450 ns

Type	V_{CES}	I_C	$V_{CE(sat)\ max}$	t_{fi}
IGBT + FRED				
IXGR 40N60C2D1	600 V	56 A	2.7 V	32 ns
IXGR 50N60C2D1	600 V	75 A	2.7 V	48 ns
IXGR 60N60C2D1	600 V	75 A	2.7 V	35 ns
IXGR 32N90B2D1	900 V	47 A	2.9 V	165 ns
IXGR 50N90B2D1	900 V	40 A	2.9 V	200 ns
IXSR 35N120BD1	1200 V	52 A	3.6 V	180 ns
IXGR 32N170H1	1700 V	38 A	3.5 V	250 ns
IXGR 32N170AH1	1700 V	26 A	5.2 V	50 ns

Type	V_{RRM}	I_F	V_F	t_{rr}
UltraFast Rectifiers		T_{VJ} = 150°C		
DSEK 60-02AR	200 V	2x30 A	0.85 V	35 ns
DSEC 60-03AR	300 V	2x30 A	0.91 V	30 ns
DSEP 9-06CR	600 V	9 A	2.90 V	15 ns
DSS 17-06CR	600 V	15 A	2.71 V	15 ns
DSEP 30-06BR	600 V	30 A	1.56 V	30 ns
DSEP 30-06CR	600 V	30 A	2.15 V	30 ns
DSEI 30-10AR	1000 V	30 A	1.88 V	35 ns
DSEP 15-12CR	1200 V	15 A	2.67 V	20 ns
DSEP 30-12CR	1200 V	30 A	3.10 V	20 ns
DSEP 30-12AR	1200 V	30 A	1.79 V	40 ns
DSEP 60-12AR	1200 V	60 A	1.74 V	40 ns
Schottky		T_{VJ} = 125°C		
DSSS 35-008AR	80 V	35 A	0.68 V	
DSSS 30-01AR	100 V	30 A	0.63 V	
DSSK 80-006BR	60 V	2x40 A	0.51 V	
DSSK 70-008AR	80 V	2x35 A	0.64 V	
DSSK 60-015AR	150 V	2x30 A	0.69 V	
DSSK 60-02AR	200 V	2x30 A	0.70 V	
Rectifiers		T_{VJ} = 150°C		
DSP 25-16AR	1600 V	25 A	1.18 V	
DSI 45-16AR	1600 V	45 A	1.30 V	
DSP 45-16AR	1600 V	45 A	1.30 V	
DSIK 45-16AR	1600 V	2x45 A	1.30 V	

Type	V_{RRM}	I_T	V_T
Thyristor		T_{VJ} = 125°C	
CS 45-16io1R	1600 V	80 A	1.73 V

See alphanumeric index for the page number of the particular part

ISOPLUS i4-PAC™

Products with MOSFET

Type ➤ New	Configu-ration	Technology/ Circuit diagram		V_{DSS} V	I_{D25} @ 25°C A	I_{D90} @ 90°C A	$R_{DS(on)\ typ.}$ T_C = 25°C mΩ	Fig. No.	Package style Outline drawings on page 188 - 224
FMM 300-0055P	***phaseleg***	Trench MOSFET	B	55	300	220	2.7	X024a	
FMM 150-0075P	***phaseleg***	Trench MOSFET	B	75	150	120	4.7		
FMM 75-01F	***phaseleg***	HiPerFET	B	100	75	50	20		
FMM 65-015P	***phaseleg***	Trench MOSFET	B	150	65	50	13		
FMD 80-0045PS	***boost***	Trench MOSFET & Schottky	D	55	150	110	3.8		
FMD 21-05QC	***boost***	HiPerFET & HiPerDynFRED	E	500	21	15	180		
FMD 40-06KC	***boost***	CoolMOS & HiPerDynFRED	E	600	38	25	60		
FDM 100-0045SP	***buck***	Trench MOSFET & Schottky	F	45	100	80	5.7		
FDM 21-05QC	***buck***	HiPerFET & HiPerDynFRED	G	500	21	15	180		
IXFF 24N100	***single***	HiPerFET	A	1000	22	15	320	X024c	
IXKF 40N60SCD1	***single***	CoolMOS & serial Schottky & HiPerFRED as free wheeling diode	H	600	38	25	60		

COOLMOS™ Power Semiconductors CoolMOS™ is a trademark of Infineon Technologies

X024a
ISOPLUS i4-PAC™
Weight = 6 g

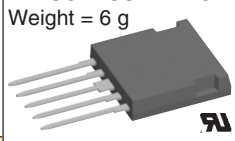

Products with IGBT

Type ➤ New	Configu-ration	Technology / Circuit diagram		V_{CES} V	I_{C25} @ 25°C A	I_{C90} @ 90°C A	$V_{CE(sat)\ typ.}$ T_C = 25°C	Fig. No.
FII 30-06D	***phaseleg***	NPT IGBT	K	600	30	18	1.9	X024a
FII 40-06D	***phaseleg***	NPT IGBT	K	600	40	25	1.8	
FII 30-12E	***phaseleg***	NPT³ IGBT	K	1200	50	32	2.4	
FII 50-12E	***phaseleg***	NPT³ IGBT	K	1200	50	32	2.0	
FID 35-06C	***boost***	NPT IGBT & HiPerDynFRED	L	600	38	24	1.9	
FID 36-06D	***boost***	NPT IGBT & HiPerFRED	M	600	38	24	1.9	
FID 60-06D	***boost***	NPT IGBT & HiPerFRED	M	600	65	40	1.6	
IXBF 9N160G	***single***	BiMOSFET	J	1600	7	4	4.9	X024c
IXBF 40N160	***single***	BiMOSFET	J	1600	28	16	6.2	
IXLF 19N250A	***single***	High voltage IGBT	I	2500	32	19	3.2	

X024c
ISOPLUS i4-PAC™
Weight = 6 g

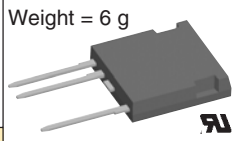

AC Switch

Type ➤ New	Configuration	Voltage V	Current @ T_C = 90°C A	Circuit diagram	Fig. No.
FMK 75-01F	***MOSFET Common Source***	100	50	C	X024a
FIO 50-12BD	***1-phase Bridge and IGBT***	1200	32	N	

■ **Applications**
- Lighting Control
- White Goods
- Matrix Inverter

1 device replaces a Triac
2 devices for Motor Control
9 devices for 3 Phase Motor Control without DC Link Capacitor

Circuit diagram

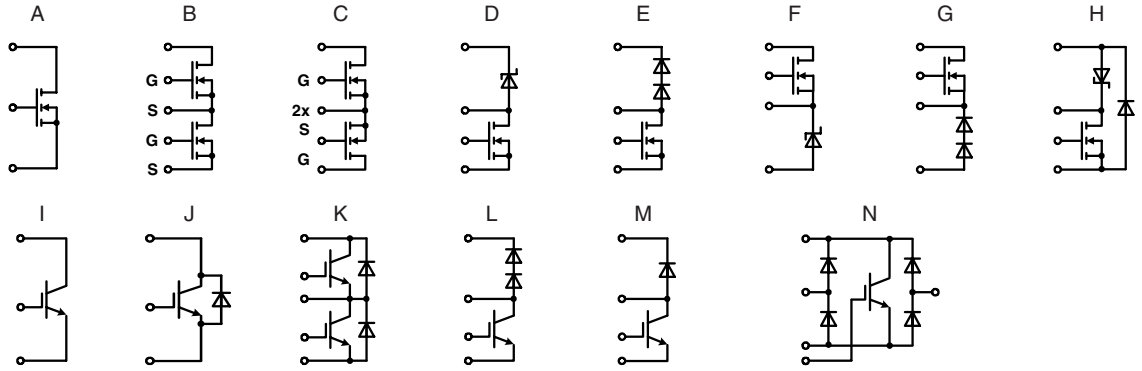

ISOPLUS i4-PAC™

Bipolar Products

Type ➤ New	Configuration	Diode type	Voltage V	$I_{D(AV)M}$ @ T_C = 90°C A	Circuit diagram	Fig. No.	Package style Outline drawings on page 188 - 224
FUS 45-0045B	***3-phase bridge***	Schottky	45	45	T	X024a	X024a **ISOPLUS i4-PAC™** Weight = 6 g
FSS 100-008A	***phase leg***	Schottky	80	90	Q	X024b	
FBS 10-06SC	***1-phase bridge***	Si-Carbide	600	6.6	R	X024a	
FBS 16-06SC	***1-phase bridge***	Si-Carbide	600	11	R		
➤ **FBS 10-12SC**	***1-phase bridge***	Si-Carbide	1200	under development	R		
FBE 22-06N1	***1-phase bridge***	HiperFRED	600	20	R		
FUE 30-12N1	***3-phase bridge***	HiperFRED	1200	30	S		
FBO 16-12N	***1-phase bridge***	Rectifier	1200	22	R		
FBO 40-12N	***1-phase bridge***	Rectifier	1200	40	R		
FUO 22-12N	***3-phase bridge***	Rectifier	1200	27	S		
FUO 22-16N	***3-phase bridge***	Rectifier	1600	27	S		X024b **ISOPLUS i4-PAC™** Weight = 6 g
FUO 50-16N	***3-phase bridge***	Rectifier	1600	50	S		
FCC 21-12io	***phaseleg***	Thyristor	1200	21	U		
CS 20-22moF1	***single part, high voltage***	Thyristor	2200	18	V	X024c	
DSEE 55-24N1F	***phase leg***	HiperFRED	2400*	55	P	X024b	
➤ **DHH 55-36N1F**	***phase leg***	SonicFRD	3600*	50	P		X024c **ISOPLUS i4-PAC™** Weight = 6 g

* series connected

Circuit diagram

P Q R S T U V

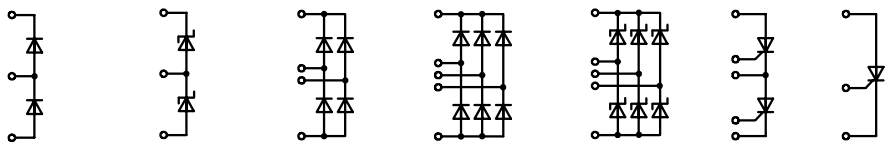

ISOPLUS-DIL™

High Current low $R_{DS(on)}$ Trench MOSFET Six-Pack

New DCB based surface mount package for automotive applications

In the automotive industry the usage of electronics is growing each year, especially with MOSFET technology. Steering aids, valve control, active suspension and many other functions in a car are driven by MOSFET's. The trends in these applications are the usage of Trench MOSFET and miniaturization of the electronic components, which results in low inductance designs with low EMC disturbance, easy manufacturability and the most important one, reliability. IXYS has introduced the new GWM product series exactly for these applications fulfilling these market demands.

The standard GWM ISOPLUS-DIL (Dual-In-Line) package includes a Trench MOSFET Six-pack, also customized configurations can be integrated.
The ISOPLUS-DIL package is a new member of the IXYS ISOPLUS family. The IXYS ISOPLUS family is well known for it's advantages; the expansion coefficient of the DCB is close to that of silicon which results in high temperature cycle reliability, the heat transfer through the ceramic is optimal, if the GWM is compared with standard solutions the current loops are reduced and also the parasitic capacity is reduced. Both results in better EMI behavior of the application. The advantages of the Direct Copper Bonded substrate results in a very reliable, high power density component. The GWM, targeted for the automotive segment, is tested according to the AEC-Q101.

The GWM ISOPLUS-DIL six-pack is a very compact and reliable solution for automotive applications, which contains the latest technology trench MOSFET's. With the electrical and mechanical properties of the GWM ISOPLUS-DIL, design-in and usability is improved compared to solutions currently used.

ISOPLUS-DIL™

Features

- Low R_{DSon}
- Optimized intrinsic reverse diode
- High level of integration
- Multi chip packaging
- High power density
- High current power terminals (300 A, RMS)
- Auxiliary terminals for MOSFET control
- Terminals for soldering (wave or re-flow) or welding connections
- Isolated DCB ceramic base plate with optimized heat transfer
- 1000 V electrical isolation
- Logic level version feasible

Applications

- Automobile electric power steering
- Active suspension
- Water pump
- Automobile starter generator
- Propulsion drives
- Fork lift drives
- Battery operated equipment

Benefits

- Highest reliability
- Easy assembly
- Optimized EMI behavior
- Extremely low power loss

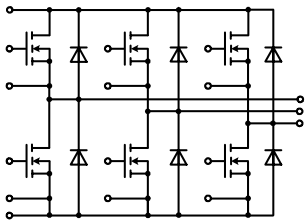

6-pack Trench MOSFET

Type ➤ New	Trench	V_{DS} Max. V	$I_{D(cont)}$ $T_C = 25°C$ A	I_{D90} $T_C = 90°C$ A	$R_{DS(on)\,typ}$ $T_C = 25°C$ mΩ	$Q_{G(on)}$ typ nC	t_{rr} typ. ns	Fig. No.	xxx = Order Code:
GWM 220-004P3-xxx	standard	40	190	145	2.0	94	70	X026	SL Straight Leads BL Bent Leads SMD Surface Mount Device
GWM 160-0055P3-xxx	standard	55	160	120	2.3	86	100	-SL	
GWM 120-0075P3-xxx	standard	75	125	95	3.7	91	90	-BL	
➤ **GWM 100-0085X1**-xxx	standard	85		**under development**				-SMD	
GWM 70-01P2-xxx	standard	100	70	50	11	110	80		
➤ **GWM 95-01X1**-xxx	standard	100		**under development**					

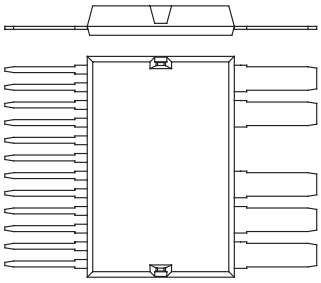

X026a **ISOPLUS-DIL™**
Weight = 25 g xxx-SL

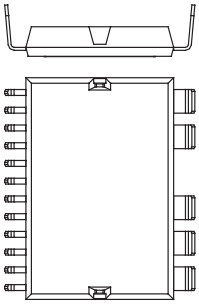

X026b **ISOPLUS-DIL™**
Weight = 25 g xxx-BL

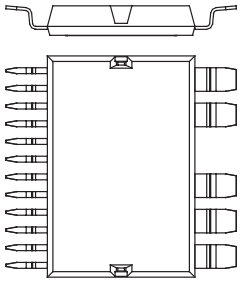

X026c **ISOPLUS-DIL™**
Weight = 25 g xxx-SMD

Package style

Outline drawings on page 188 - 224

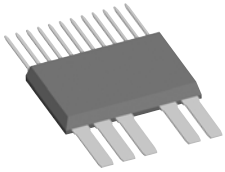

Order Code: SL
(Straight Leads)

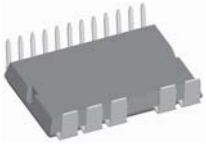

Order Code: BL
(Bent Leads)

Order Code: SMD
(Surface Mount Device)

MiniPack 2 - IGBT Modules

CBI

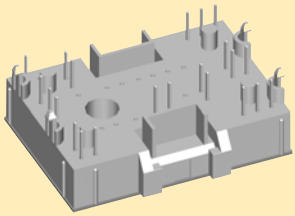

Fig. X110

Outline drawings on on page 188 - 224

See data sheet for pin arrangements

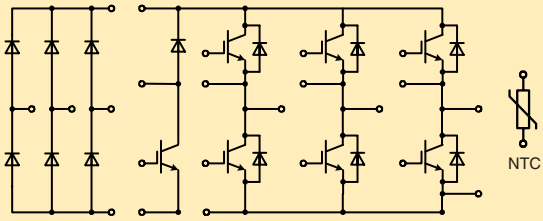

Type	Rectifier 3~			Inverter 3~					Brake chopper		
	V_{RRM}	I_{FAVM} T_H = 80°C	R_{thJC} typ.	V_{CES}	I_C T_C = 25°C	I_C T_C = 90°C	$V_{CE(sat)}$ typ.	R_{thJC} typ.	V_{CES}	I_C T_C = 90°C	R_{thJC} typ.
➤ New	V	A	K/W	V	A	A	V	K/W	V	A	K/W
600 V NPT IGBT											
➤ MIAA10WB600TMH	1600	62	2.1	600	18	13	2.1	1.8	600	13	1.8
➤ MIAA10WF600TMH	1600	62	2.1	600	18	13	2.1	1.8	No brake chopper included		
➤ MIAA15WB600TMH	1600	62	2.1	600	23	16	2.1	1.6	600	16	1.6
➤ MIAA20WB600TMH	1600	62	2.1	600	29	20	2.1	1.3	600	20	1.3
600 V Trench IGBT											
➤ MITA30WB600TMH	1600	90	1.4	600	40	27	1.5	1.4	600	27	1.4
1200 V Trench IGBT											
➤ MITA10WB1200TMH	1600	62	2.1	1200	16	11	1.8	2.2	1200	11	2.2
➤ MITB10WB1200TMH	1600	62	2.1	1200	17	12	1.9	1.95	1200	12	1.95
➤ MITB15WB1200TMH	1600	62	2.1	1200	24	17	1.7	1.6	1200	17	1.6

CBI

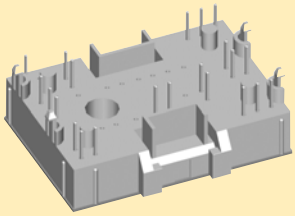

Fig. X110

Outline drawings on on page 188 - 224

See data sheet for pin arrangements

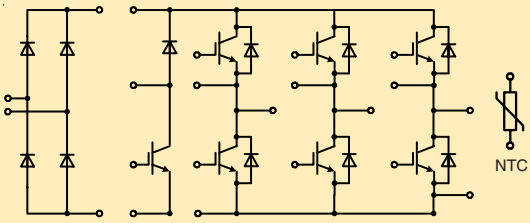

Type	Rectifier			Inverter					Brake chopper		
	V_{RRM}	I_{FAVM} T_H = 80°C	R_{thJC} typ.	V_{CES}	I_C T_C = 25°C	I_C T_C = 90°C	$V_{CE(sat)}$ typ.	R_{thJC} typ.	V_{CES}	I_C T_C = 90°C	R_{thJC} typ.
➤ New	V	A	K/W	V	A	A	V	K/W	V	A	K/W
600 V NPT IGBT											
➤ MIAA10WE600TMH	1600	23	2.1	600	18	13	2.1	1.8	600	13	1.8
➤ MIAA10WD600TMH	1600	23	2.1	600	18	13	2.1	1.8	No brake chopper included		
➤ MIAA15WE600TMH	1600	23	2.1	600	23	16	2.1	1.6	600	16	1.6
➤ MIAA15WD600TMH	1600	23	2.1	600	23	16	2.1	1.6	No brake chopper included		
➤ MIAA20WE600TMH	1600	23	2.1	600	29	20	2.1	1.3	600	20	1.3
➤ MIAA20WD600TMH	1600	23	2.1	600	29	20	2.1	1.3	No brake chopper included		

Nomenclature

M	I	AA	10	WB	600	T	MH	Sample
M								Module
	I							IGBT
		AA						NPT
		TA						Trench standard version
		TB						Trench fast version
			10					Current
				W				Six-Pack
				WB				Six-Pack with 3~ bridge and brake
				WE				Six-Pack with 1~ bridge and brake
					600			Voltage
						T		NTC inside
							MH	MiniPack 2 housing

CBI Modules

CBI = Converter Brake Inverter
three phase rectifier, IGBT brake chopper, three phase IGBT inverter, temperature sensor

CBI 1

IGBT Modules

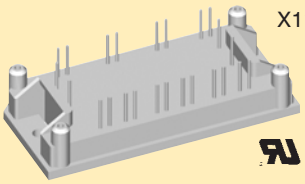

X111

Package style

Outline drawings on page 188 - 224

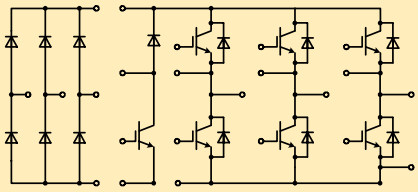

NTC

Type	Rectifier 3~			Inverter 3~					Brake chopper		
	V_{RRM}	I_{DAVM} T_H = 80°C	R_{thJC} typ.	V_{CES}	I_C T_C = 25°C	I_C T_C = 80°C	$V_{CE(sat)}$ typ.	R_{thJC} typ.	V_{CES}	I_C T_C = 80°C	R_{thJC} typ.
➤ New	V	A	K/W	V	A	A	V	K/W	V	A	K/W
600 V NPT IGBT											
MUBW 10-06A6K	1600	61	2.1	600	12	8	2.5	2.8	600	8	2.8
MUBW 15-06A6K		65	1.9		19	14	2.4	1.7		8	2.8
MUBW 20-06A6K		65	1.9		25	17	2.0	1.5		8	2.8
MUBW 25-06A6K		65	1.9		31	21	2.1	1.25		14	1.7
MUBW 35-06A6K		89	1.4		42	29	2.3	0.95		17	1.5
1200 V NPT IGBT											
MUBW 15-12A6K	1600	89	1.4	1200	19	13	3.0	1.35	1200	13	1.35
MUBW 30-12A6K		89	1.4		30	21	3.0	0.95		13	1.35
1200 V NPT³ IGBT											
➤ **MUBW 30-12E6K**	1600	89	1.4	1200	30	21	3.1	0.95	1200	13	1.35
1200 V Trench IGBT											
➤ **MUBW 45-12T6K**	1600	104	1.1	1200	43	31	2.5	0.8	1200	13	1.35

CBI 2

IGBT Modules

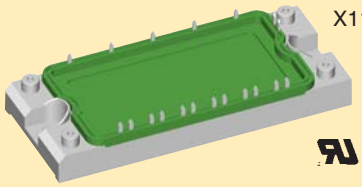

X112

Package style

Outline drawings on page 188 - 224

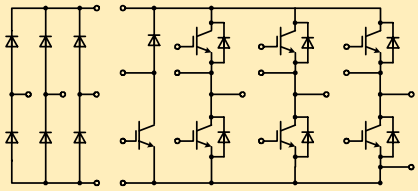

NTC

Type	Rectifier 3~			Inverter 3~					Brake chopper		
	V_{RRM}	I_{DAVM} T_C = 80°C d = 1/3	R_{thJC} max.	V_{CES}	I_C T_C = 25°C	I_C T_C = 80°C	$V_{CE(sat)}$ typ.	R_{thJC} max.	V_{CES}	I_C T_C = 80°C	R_{thJC} max.
➤ New	V	A	K/W	V	A	A	V	K/W	V	A	K/W
600 V NPT IGBT											
MUBW 10-06A7	1600	18	1.5	600	20	15	1.9	1.5	600	15	1.5
MUBW 15-06A7		18	1.5		25	18	1.9	1.3		15	1.5
MUBW 20-06A7		24	1.3		35	25	1.9	1.0		18	1.4
MUBW 30-06A7		24	1.3		50	35	1.9	0.7		18	1.3
MUBW 50-06A7		29	1.1		75	50	1.9	0.5		25	1.0
1200 V NPT IGBT											
MUBW 10-12A7	1600	18	1.5	1200	20	15	2.3	1.2	1200	15	1.2
MUBW 15-12A7		24	1.3		35	25	2.0	0.7		15	1.2
MUBW 25-12A7		24	1.3		50	35	2.2	0.55		15	1.2
MUBW 35-12A7		29	1.1		50	35	2.5	0.55		25	0.7
1200 V NPT³ IGBT											
MUBW 35-12E7	1600	29	1.1	1200	52	36	2.2	0.55	1200	25	0.7
1200 V Trench IGBT											
➤ **MUBW 15-12T7**	1600	24	1.3	1200	25	15	1.7	1.2	1200	15	1.2
➤ **MUBW 25-12T7**		24	1.3		40	25	1.7	0.8		15	1.2
➤ **MUBW 40-12T7**		80	1.3		62	44	2.0	0.6		25	0.7

CBI Modules

CBI = Converter Brake Inverter
three phase rectifier, IGBT brake chopper, three phase IGBT inverter, temperature sensor

CBI 3

IGBT Modules

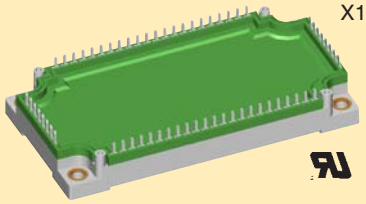

X113

Package style

Outline drawings on page 188 - 224

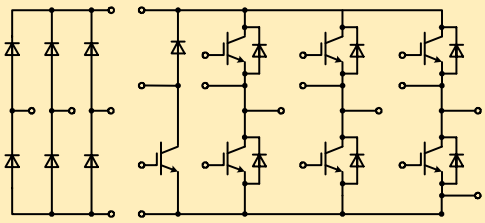

NTC

Type	Rectifier 3~			Inverter 3~					Brake chopper		
➤ New	V_{RRM} V	I_{DAVM} $T_C = 80°C$ d = 1/3 A	R_{thJC} max. K/W	V_{CES} V	I_C $T_C = 25°C$ A	I_C $T_C = 80°C$ A	$V_{CE(sat)}$ typ. V	R_{thJC} max. K/W	V_{CES} V	I_C $T_C = 80°C$ A	R_{thJC} max. K/W
600 V NPT IGBT											
MUBW 50-06A8	1600	40	1.1	600	75	50	1.9	0.5	600	25	1.0
MUBW 75-06A8		46	0.94		100	65	2.0	0.39		35	0.75
MUBW 100-06A8		60	0.73		125	85	1.9	0.3		50	0.55
1200 V NPT IGBT											
MUBW 35-12A8	1600	27	1.3	1200	50	35	2.5	0.55	1200	25	0.7
MUBW 50-12A8		46	0.94		85	60	2.2	0.35		35	0.55
1200 V NPT³ IGBT											
MUBW 50-12E8	1600	50	0.94	1200	90	62	1.9	0.35	1200	35	0.55
1200 V Trench IGBT											
➤ **MUBW 50-12T8**	1600	50	0.94	1200	75	50	1.7	0.45	1200	35	0.55
➤ **MUBW 75-12T8**		50	0.94		105	75	1.7	0.35		35	0.55
1700 V Trench IGBT											
➤ **MUBW 50-17T8**	2200	120	1.1	1700	74	53	2.0	0.43	1700	34	0.62
➤ **MUBW 75-17T8**		140	0.95		113	80	2.0	0.28		34	0.62

Gate Driver Board *GDBD 4410*

Drives 7 Gates of a Converter – Brake – Inverter IGBT Power Module for Industrial Applications

GDBD 4410 simplifies driving CBI2 and CBI3 module types. Pin locations of the driver board match that of the CBI modules. Thus it can be mounted very close to the gate control pins of the module, providing the shortest possible traces from driver to the gate and an easy routing on the main inverter board. GDBD4410 is a fast and easy to use solution and ideal for small and medium inverter series.

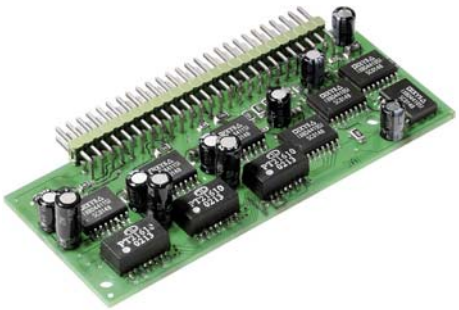

Main features are:

- Drives CBI modules up to 100A/600V and 50A/1200V
- Driver for brake IGBT included
- Design is based on IXBD4410/11 chipset
- High output gate current up to ± 2A peak per gate
- Integrated charge pump for negative gate drive to speed up IGBT turn off and the suppress spurious gate noise triggering
- Noise immune pulse transformer for high dV/dt applications (>50kV/µs)
- V_{CEsat} sensing for short circuit protection
- Failure status signal
- Ground referenced and TTL/CMOS compatible interface for control signals
- +15V unipolar power supply required
- Operating frequency up to 25 kHz

IGBT Modules - Six-Pack configuration

Six-Pack

IGBT Modules

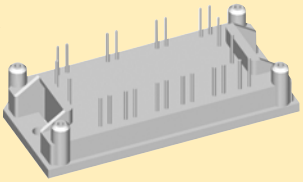

X111

Package style

Outline drawings on page 188 - 224

See data sheet for pin arrangements

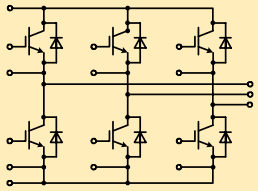

NTC

Type ➤ New	V_{CES} V	I_{C25} A T_C = 25°C IGBT	I_{C80} A T_C = 80°C IGBT	$V_{CE(sat)\ typ}$ V T_J = 25°C IGBT	E_{off} mJ T_J = 125°C IGBT	R_{thJC} K/W IGBT	I_{F25} A T_C = 25°C diode	I_{F80} A T_C = 80°C diode	NTC inside
600 V PT IGBT									
➤ **MWI 60-06G6K**	600	60	41	2.3	0.5	0.7	48	33	yes
1200 V NPT IGBT									
➤ **MWI 15-12A6K**	1200	19	13	3.0	1.1	1.37	24	16	yes
1200 V NPT³ IGBT									
➤ **MWI 30-12E6K**	1200	29	21	2.5	1.8	0.95	24	16	yes
➤ **MWI 50-12E6K**		51	36	2.4	2.6	0.6	49	32	yes
1200 V Trench IGBT									
➤ **MWI 45-12T6K**	1200	43	31	1.9	3.4	0.8	49	32	yes
➤ **MWI 60-12T6K**		58	41	1.9	4.8	0.62	49	32	yes
➤ **MWI 80-12T6K**		80	56	2.0	6.5	0.46	80	51	yes

Six-Pack

IGBT Modules

➤ New

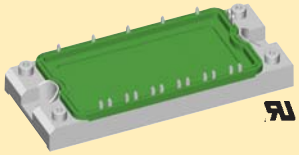

X112

Package style

Outline drawings on page 188 - 224

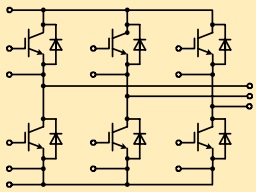

NTC

Type	V_{CES} V	I_{C25} A 25°C IGBT	I_{C80} A 80°C IGBT	$V_{CE(sat)\ typ}$ V 25°C IGBT	E_{off} mJ 125°C IGBT	R_{thJC} K/W IGBT	I_{F25} A 25°C diode	I_{F80} A 80°C diode	NTC inside
600 V NPT IGBT									
MWI 30-06A7	600	45	30	1.9	1.0	0.88	36	24	optional
MWI 50-06A7		75	50	1.9	1.7	0.55	72	45	optional
MWI 75-06A7		90	60	2.1	2.5	0.44	140	85	optional
1200 V NPT IGBT									
MWI 15-12A7	1200	30	20	1.0	1.8	0.88	25	17	no
MWI 25-12A7		50	35	2.2	2.8	0.55	50	33	optional
MWI 35-12A7		62	44	2.2	4.2	0.44	50	33	optional
MWI 50-12A7		85	60	2.2	5.6	0.35	110	70	optional
1200 V NPT³ IGBT									
➤ **MWI 25-12E7**	1200	52	36	1.9	2.5	0.55	50	33	no
MWI 50-12E7		90	62	2.1	4.0	0.35	110	70	no
1200 V Trench IGBT									
➤ **MWI 50-12T7**	1200	75	50	1.7	6.5	0.49	110	70	yes
➤ **MWI 75-12T7**		105	75	1.7	9.5	0.35	150	100	yes

IGBT Modules - Six-Pack configuration

Six-Pack

IGBT Modules

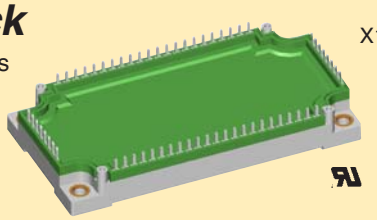

X113

Package style

Outline drawings on page 188 - 224

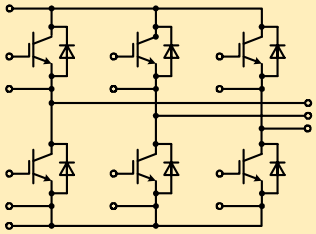

➤ New

Type	V_{CES} V	I_{C25} A T_C = 25°C IGBT	I_{C80} A T_C = 80°C IGBT	$V_{CE(sat)\ typ}$ V T_J = 25°C IGBT	E_{off} mJ T_J = 125°C IGBT	R_{thJC} K/W IGBT	I_{F25} A T_C = 25°C diode	I_{F80} A T_C = 80°C diode	NTC inside
600 V NPT IGBT									
MWI 100-06A8	600	130	88	2.0	2.9	0.3	140	88	optional
MWI 150-06A8		170	115	2.0	4.6	0.24	210	130	optional
MWI 200-06A8		215	155	2.0	6.3	0.18	260	165	optional
1200 V NPT IGBT									
MWI 75-12A8	1200	125	85	2.2	10.5	0.25	150	100	optional
MWI 100-12A8		160	110	2.2	14.6	0.19	200	130	optional
1200 V NPT³ IGBT									
MWI 75-12E8	1200	130	90	2.0	7.5	0.25	150	100	no
MWI 100-12E8		165	115	2.0	10.0	0.19	200	130	no
1200 V Trench IGBT									
➤ **MWI 75-12T8**	1200	100	75	1.7	9.5	0.35	150	100	yes
➤ **MWI 100-12T8**		140	100	1.7	12.0	0.26	200	130	yes
➤ **MWI 150-12T8**		200	150	1.7	17.0	0.18	tbd	tbd	yes

Six-Pack

IGBT Modules

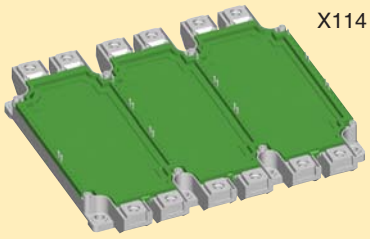

X114

Package style

Outline drawings on page 188 - 224

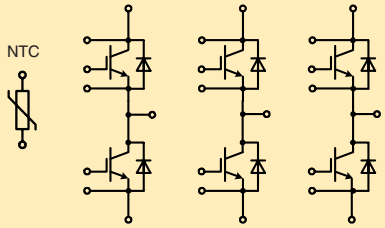

Type ➤ New	V_{CES} V	I_{C25} A T_C = 25°C IGBT	I_{C80} A T_C = 80°C IGBT	$V_{CE(sat)\ typ}$ V T_J = 25°C IGBT	E_{off} mJ T_J = 125°C IGBT	R_{thJC} K/W IGBT	I_{F25} A T_C = 25°C diode	I_{F80} A T_C = 80°C diode	NTC inside
1200 V NPT³ IGBT									
➤ **MWI 225-12E9**	1200	355	250	2.1	20	0.09		205	yes
➤ **MWI 300-12E9**		530	375	2.0	30	0.06		300	yes
➤ **MWI 450-12E9**		640	440	2.2	45	0.057		450	yes
1700 V NPT³ IGBT									
➤ **MWI 225-17E9**	1700	335	235	2.5	54	0.085		200	yes
➤ **MWI 300-17E9**		500	350	2.3	80	0.057		290	yes
➤ **MWI 450-17E9**		580	405	2.25	90	0.057		450	yes

IGBT Modules - Full Bridge configuration

Full Bridge

IGBT Modules

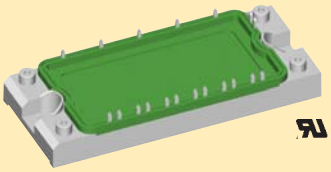

X112

Package style

Outline drawings on page 188 - 224

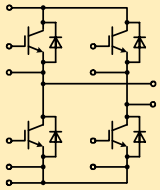

➤ New

Type	V_{CES} V	I_{C25} A 25°C IGBT	I_{C80} A 80°C IGBT	$V_{CE(sat)\ typ}$ V 25°C IGBT	E_{off} mJ 125°C IGBT	R_{thJC} K/W IGBT	I_{F25} A 25°C diode	I_{F80} A 80°C diode
600 V NPT IGBT								
MKI 50-06A7	600	72	50	1.9	1.7	0.55	72	45
MKI 75-06A7		90	60	2.1	2.5	0.44	140	85
1200 V Fast NPT IGBT								
➤ **MKI 50-12F7**	1200	65	45	3.2	2.5	0.35	110	70
1200 V NPT³ IGBT								
➤ **MKI 50-12E7**	1200	90	62	1.9	4.0	0.35	110	70

Full Bridge

IGBT Modules

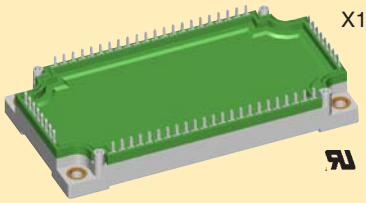

X113

Package style

Outline drawings on page 188 - 224

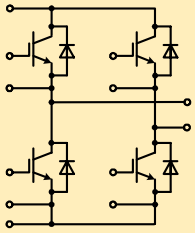

➤ New

Type	V_{CES} V	I_{C25} A $T_C = 25°C$ IGBT	I_{C80} A $T_C = 80°C$ IGBT	$V_{CE(sat)\ typ}$ V $T_J = 25°C$ IGBT	E_{off} mJ $T_J = 125°C$ IGBT	R_{thJC} K/W IGBT	I_{F25} A $T_C = 25°C$ diode	I_{F80} A $T_C = 80°C$ diode
1200 V Fast NPT IGBT								
➤ **MKI 100-12F8**	1200	125	85	3.3	5.0	0.19	200	130
1200 V NPT³ IGBT								
MKI 75-12E8	1200	130	90	2.0	7.5	0.25	150	100
MKI 100-12E8		165	115	2.0	10.0	0.19	200	130

IGBT Modules

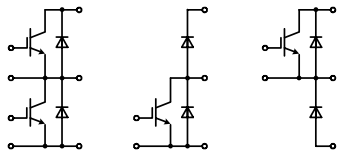

NPT IGBT Modules

NPT IGBT = non-punch through insulated gate bipolar transistor, square RBSOA, short circuit rated

Type ➤ New	V_{CES} V	I_{C25} A T_C = 25°C IGBT	I_{C80} A T_C = 80°C IGBT	$V_{CE(sat)\ typ}$ V T_J = 25°C IGBT	E_{off} mJ T_J = 125°C IGBT	R_{thJC} K/W IGBT	I_{F25} A T_C = 25°C diode	I_{F80} A T_C = 80°C diode	Thermistor	Fig. No.
1200 V Half Bridge										
MII 75-12A3	1200	90	60	2.2	5.6	0.33	100	60		X127a
MII 100-12A3	1200	135	90	2.2	10.5	0.22	150	100		X127a
MII 145-12A3	1200	160	110	2.2	15.0	0.18	150	100		X127a
MII 150-12A4	1200	180	120	2.2	11.5	0.17	200	130		X128a
MII 200-12A4	1200	270	180	2.2	21.0	0.11	300	200		X128a
MII 300-12A4	1200	330	220	2.2	29.0	0.09	450	270		X128a
1200 V Boost chopper										
MID 75-12A3	1200	90	60	2.2	5.6	0.33	100	60		X127b
MID 100-12A3	1200	135	90	2.2	10.5	0.22	150	100		X127b
MID 145-12A3	1200	160	110	2.2	15.0	0.18	150	100		X127b
MID 150-12A4	1200	180	120	2.2	11.5	0.17	200	130		X128b
MID 200-12A4	1200	270	180	2.2	21.0	0.11	300	200		X128b
MID 300-12A4	1200	330	220	2.2	29.0	0.09	450	270		X128b
MID 550-12A4	1200	670	460	2.3	59.0	0.05	750	460		X128b
1200 V Buck chopper										
MDI 75-12A3	1200	90	60	2.2	5.6	0.33	100	60		X127c
MDI 100-12A3	1200	135	90	2.2	10.5	0.22	150	100		X127c
MDI 145-12A3	1200	160	110	2.2	15.0	0.18	150	100		X127c
MDI 150-12A4	1200	180	120	2.2	11.5	0.17	200	130		X128c
MDI 200-12A4	1200	270	180	2.2	21.0	0.11	300	200		X128c
MDI 300-12A4	1200	330	220	2.2	29.0	0.09	450	270		X128c
MDI 550-12A4	1200	670	460	2.3	59.0	0.05	750	460		X128c
1200 V Half Bridge with 3rd generation NPT³										
MII 400-12E4	1200	420	300	2.2	30.0	0.08	450	290		X130a
1200 V Boost chopper with 3rd generation NPT³										
MID 400-12E4 ①	1200	420	300	2.2	30.0	0.08	450	290		X130b
1200 V Buck chopper with 3rd generation NPT³										
MDI 400-12E4 ①	1200	420	300	2.2	30.0	0.08	450	290		X130c

① I_{F80} of IGBT free wheeling diode: 95 A

Package style

Outline drawings on page 188 - 224

X127a/b/c
Weight = 130 g

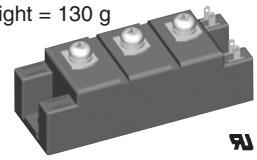

Gate connection arrangement see data sheet

X128a/b/c/d
Weight = 250 g

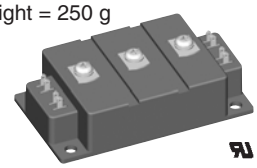

Gate connection arrangement see data sheet

X130a/b/c
Weight = 250 g

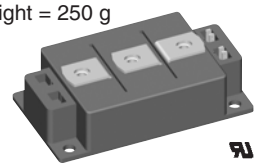

Gate connection arrangement see data sheet

ISOPLUS i4-PAC™ Package

- isolated back surface (DCB)
- low inductive path
- high reliability

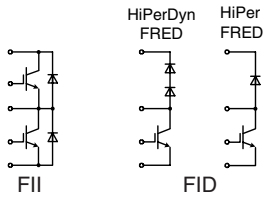

NPT IGBT Modules in i4-PAC

Type ➤ New	Configu-ration	Technology	V_{CES} V	I_{C25} @ 25°C A	I_{C80} @ 90°C A	$V_{CE(sat)\ typ.}$ T_C = 25°C	Fig. No.
FII 30-06D	***phaseleg***	NPT IGBT	600	30	18	1.9	X024a
FII 40-06D	***phaseleg***	NPT IGBT	600	40	25	1.8	
FII 30-12E	***phaseleg***	NPT³ IGBT	1200	32	20	2.4	
FII 50-12E	***phaseleg***	NPT³ IGBT	1200	50	32	2.0	
FID 35-06C	***boost***	NPT IGBT & HiPerDynFRED	600	38	24	1.9	
FID 36-06D	***boost***	NPT IGBT & HiPerFRED	600	38	24	1.9	
FID 60-06D	***boost***	NPT IGBT & HiPerFRED	600	65	40	1.6	

X024a **ISOPLUS i4-PAC™**
Weight = 9 g

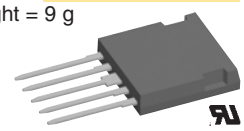

IGBT Modules

NPT³ IGBT Modules

- low loss and smooth switching
- AlSiC base plate for high power cycling capacity
- AlN substrate for low thermal resistance

High Power Single Switch

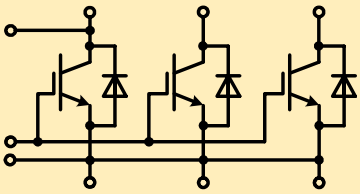

Type ➤ New	V_{CES} V	I_{C25} A T_C = 25°C IGBT	I_{C80} A T_C = 80°C IGBT	$V_{CE(sat)typ}$ V T_J = 25°C IGBT	E_{off} mJ T_J = 125°C IGBT	R_{thJC} K/W IGBT	I_{F25} A T_C = 25°C diode	I_{F80} A T_C = 80°C diode	Fig. No.
MIO 1800-17E10	1700	2500	1800	2.3	670	0,009	tbd	1800	X134
MIO 2400-17E10	1700	3300	2400	2.3	980	0,007		2400	
➤ **MIO 1200-25E10**	2500	1650	1200	2.5	1250	0,009		1200	
➤ **MIO 1500-25E10**	2500	2100	1500	2.7	1450	0,008		1500	
MIO 1200-33E10	3300	1650	1200	3.1	1950	0,0085		1200	
High Voltage Package with enlarged strike and creepage distance									
➤ **MIO 1200-33E11**	3300	1650	1200	3.1	2000	0,0085	tbd	1200	X135
➤ **MIO 600-65E11**	6500	840	600	4.2	3500	0,011		600	

Package style

Outline drawings on page 188 - 224

X134
Weight = 1500 g

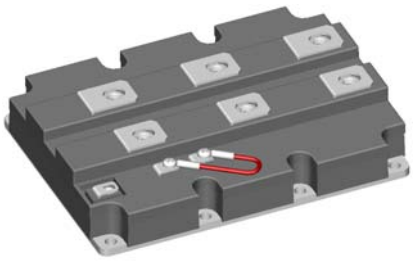

X135
Weight = 1500 g

IGBT Modules

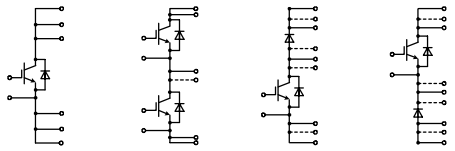

single switch | phase leg | boost chopper | buck chopper

Type ➤ New	V_{CES} V	I_{C25} T_C = 25 °C IGBT A	I_{C80} T_C = 80 °C IGBT A	$V_{CE(sat)}$ typical T_J = 25 °C IGBT V	$t_{d(on)}$ $t_{d(off)}$ delay time Switching Characte- ristics ns		R_{thJC} per IGBT K/W	I_{F25} T_J = 25°C diode A	I_{F80} T_J = 80°C diode A	R_{thJC} per diode K/W	Fig. No.	Package style Outline drawings on page 188 - 224
Single switch modules											X102	X102 **ECO-PAC 2** Weight = 24 g 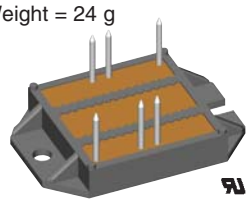 See data sheet for pin arrangement
VIO 25-06P1	600	25	17	2.4	30	270	1.5	19	12	3.5		
VIO 25-12P1	1200	30	21	2.6	100	500	0.95	26	17	2.3		
VIO 50-06P1	600	43	29	2.4	50	270	0.95	39	19	2.3		
VIO 50-12P1	1200	49	33	3.1	100	500	0.6	49	31	1.3		
VIO 75-06P1	600	69	48	2.3	50	300	0.6	56	35	1.3		
VIO 75-12P1	1200	92	62	2.7	100	500	0.33	103	65	0.66		
VIO 100-06P1	600	93	63	2.4	150	450	0.43	132	82	0.66		
VIO 125-12P1	1200	138	94	2.8	100	650	0.22	154	97	0.45		
VIO 130-06P1	600	121	83	2.3	25	150	0.33	134	82	0.66		
VIO 160-12P1	1200	169	117	2.9	100	600	0.18	154	97	0.45		
Phase leg modules												
VII 25-06P1	600	25	17	2.4	30	270	1.5	19	12	3.5		
VII 25-12P1	1200	30	21	2.6	100	500	0.95	26	17	2.3		
VII 50-06P1	600	43	29	2.4	50	270	0.95	39	19	2.3		
VII 50-12P1	1200	49	33	3.1	100	500	0.6	49	31	1.3		
VII 75-06P1	600	69	48	2.3	50	300	0.6	56	35	1.3		
VII 75-12P1	1200	92	62	2.7	100	500	0.33	103	65	0.66		
VII 100-06P1	600	93	63	2.4	150	450	0.43	132	82	0.66		
VII 130-06P1	600	121	83	2.3	25	150	0.33	134	82	0.66		
Boost chopper modules												
VID 25-06P1	600	25	17	2.4	30	270	1.5	19	12	3.5		
VID 25-12P1	1200	30	21	2.6	100	500	0.95	26	17	2.3		
VID 50-06P1	600	43	29	2.4	50	270	0.95	39	19	2.3		
VID 50-12P1	1200	49	33	3.1	100	500	0.6	49	31	1.3		
VID 75-06P1	600	69	48	2.3	50	300	0.6	56	35	1.3		
VID 75-12P1	1200	92	62	2.7	100	500	0.33	103	65	0.66		
VID 100-06P1	600	93	63	2.4	150	450	0.43	132	82	0.66		
VID 125-12P1	1200	138	94	2.8	100	650	0.22	154	97	0.45		
VID 130-06P1	600	121	83	2.3	25	150	0.33	134	82	0.66		
VID 160-12P1	1200	169	117	2.9	100	600	0.18	154	97	0.45		
Buck chopper modules												
VDI 25-06P1	600	25	17	2.4	30	270	1.5	19	12	3.5		
VDI 25-12P1	1200	30	21	2.6	100	500	0.95	26	17	2.3		
VDI 50-06P1	600	43	29	2.4	50	270	0.95	39	19	2.3		
VDI 50-12P1	1200	49	33	3.1	100	500	0.6	49	31	1.3		
VDI 75-06P1	600	69	48	2.3	50	300	0.6	56	35	1.3		
VDI 75-12P1	1200	92	62	2.7	100	500	0.33	103	65	0.66		
VDI 100-06P1	600	93	63	2.4	150	450	0.43	132	82	0.66		
VDI 125-12P1	1200	138	94	2.8	100	650	0.22	154	97	0.45		
VDI 130-06P1	600	121	83	2.3	25	150	0.33	134	82	0.66		
VDI 160-12P1	1200	169	117	2.9	100	600	0.18	154	97	0.45		

IGBT Modules

IGBT Modules - Full Bridge configuration

Type ➤ New	V_{CES} V	I_{C25} A T_C = 25°C IGBT	I_{C80} A T_C = 80°C IGBT	$V_{CE(sat)\ typ}$ V T_J = 25°C IGBT	E_{off} mJ T_J = 125°C IGBT	R_{thJC} K/W IGBT	I_{F25} A T_C = 25°C diode	I_{F80} A T_C = 80°C diode	Circuit diagram	Fig. No.
VKI 50-06P1	600	45	30	1.9	1.0	0.88	36	24	A	X102
VKI 75-06P1	600	72	50	1.9	1.7	0.55	72	45		
VKI 50-12P1	1200	50	35	2.5	2.8	0.55	50	35		

Further modules see page 68 "IGBT Modules - Full Bridge Configuration

Six- Pac in ECO-PAC

Type ➤ New	V_{CES} V	I_{C25} A T_C = 25°C IGBT	I_{C80} A T_C = 80°C IGBT	$V_{CE(sat)\ typ}$ V T_J = 25°C IGBT	E_{off} mJ T_J = 125°C IGBT	R_{thJC} K/W IGBT	I_{F25} A T_C = 25°C diode	I_{F80} A T_C = 80°C diode	Circuit diagram	Fig. No.
VWI 20-06P1	600	19	14	1.9	0.3	1.7	21	14	B	X102
VWI 35-06P1	600	35	25	1.9	0.68	1.0	35	24		
VWI 15-12P1	1200	18	14	2.3	1.1	1.2	12	8		
VWI 6-12P1	1200	6	4.1	3.9	0.2	3.1	12	8		
VWI 3x20-06P1*	600	20	15	1.9	0.3	1.5	20	15	C	X101

* NTC optional

Package style

Outline drawings on page 188 - 224

X101 **ECO-PAC 1**

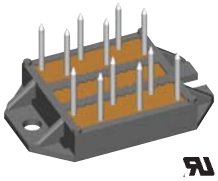

X102 **ECO-PAC 2**

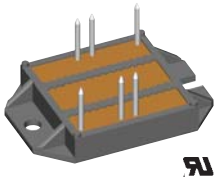

See data sheet for pin arrangements

Circuit diagrams

A

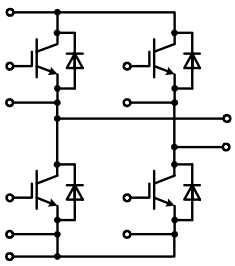

B

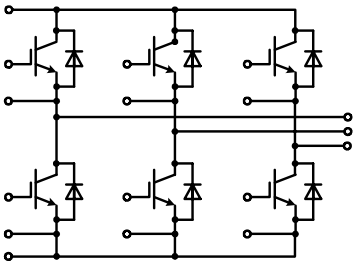

C

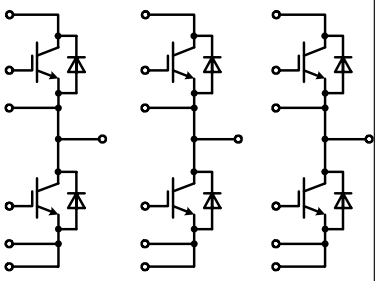

Discrete NPT IGBT

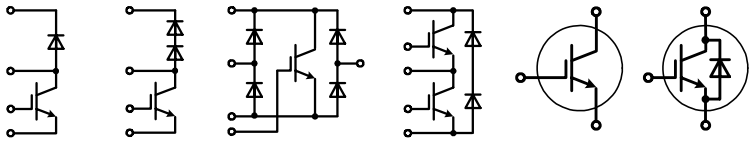

FID HiPer FRED | FID HiPer DynFRED | FIO | FII

NPT IGBT

NPT IGBT = non-punch through insulated gate bipolar transistor, square RBSOA, short circuit rated

Type ➤ New	V_{CES} V	I_{C25} A T_C = 25 °C IGBT	I_{C90} A T_C = 90 °C IGBT	V_{CEsat} V T_J = 25 °C IGBT	E_{off} mJ T_J = 125 °C IGBT	R_{thJC} K/W max. IGBT	Diode	I_{F90} A T_C = 90 °C diode	Fig. No.
IXDP20N60B	600	32	20	2.2	0.4	0.9			X005a
IXDP20N60BD1		32	20	2.2	0.4	0.9	●	14	X005a
IXDP35N60B		60	35	2.1	0.8	0.5			X005a
IXDH35N60B		60	35	2.1	0.8	0.5			X014a
IXDH35N60BD1		60	35	2.1	0.8	0.5	●	21	X014a
IXDR35N60BD1		60	24	2.1	0.8	1.0	●	18	X016a
IXDA20N120AS	1200	34	25	2.8	2.4	0.63			X011b
IXDH20N120		38	25	2.4	2.4	0.63			X014a
IXDH20N120D1		38	25	2.4	2.4	0.63	●	20	X014a
IXDH30N120		60	38	2.4	3.4	0.42			X014a
IXDH30N120D1		60	38	2.4	3.4	0.42	●	35	X014a
IXDR30N120		50	30	2.4	3.4	0.60			X016a
IXDR30N120D1		50	30	2.4	3.4	0.60	●	27	X016a
IXDN55N120D1		100	62	2.3	6.2	0.28	●	60	X027a
IXDN75N120		150	95	2.2	10.5	0.19			X027a

Package style

Outline drawings on pages 188 - 224

X005a **TO-220AB**
Weight = 4 g

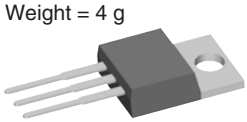

X011b **TO-263AA**
Weight = 2 g

X014a **TO-247AD**
Weight = 6 g

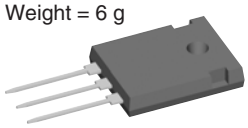

3rd generation NPT³ IGBT lower $V_{CE(sat)}$

IXEH25N120	1200	36	24	2.6	2.5	0.63			X014a
IXEH25N120D1		36	24	2.6	2.5	0.63	●	20	X014a
IXER35N120D1		50	32	2.2	2.6	0.60	●	25	X016a
IXEH40N120		60	40	2.4	3.0	0.42			X014a
IXEH40N120D1		60	40	2.4	3.0	0.42	●	35	X014a
IXER60N120		95	60	2.1	4.8	0.33			X016a
IXEN60N120		100	65	2.1	4.8	0.28			X027a
IXEN60N120D1		100	65	2.1	4.8	0.28	●	60	X027a

X016a
ISOPLUS247™
Weight = 5 g

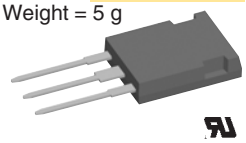

X027a/b
SOT-227B miniBLOC
Weight = 30 g

Special configurations with NPT IGBT

Type	Configuration	V_{CES} V	I_{C25} A T_C = 25°C IGBT	I_{C90} A T_C = 90°C IGBT	V_{CEsat} V T_J = 25°C IGBT	E_{off} mJ T_J = 125°C IGBT	R_{thJC} K/W max. IGBT	Fig. No.
FID35-06C	boost, HiPerDynFRED	600	38	24	1.9	0.6	1.0	X024a
FID36-06D	boost, HiPerDynFRED	600	38	24	1.9	0.6	1.0	
FID60-06D	boost, HiPerDynFRED	600	65	40	1.6	1.4	0.6	
FII30-06D	phaseleg	600	30	18	1.9	0.68	1.25	
FII40-06D	phaseleg	600	40	25	1.8	0.8	1.0	

X024a
ISOPLUS i4-PAC™
Weight = 6 g

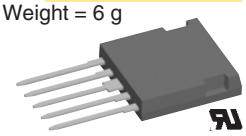

Special configurations with NPT³ IGBT

FII30-12E	phaseleg	1200	32	20	2.4	2.0	0.8	X024a
FII50-12E	phaseleg	1200	50	32	2.0	2.2	0.6	
FIO50-12BD	1~ bridge & IGBT	1200	50	32	2.0	2.2	0.6	

S Series IGBTs with SCSOA Capability

Medium speed (1 kHz to 20 kHz) Single IGBT

Part Type	V_{CES} max V	I_C max T_C=25°C A	I_C max T_C=90°C A	$V_{CE(sat)}$ max T_C=25°C V	t_{fi} typ T_J=25°C ns	E_{off} typ T_J=125°C mJ	R_{thJC} max IGBT	Fig. No
IXSP24N60B	600	40	24	2.5	170	-	-	X005a
IXSH24N60B		48	24	2.5	170	1.3	0.83	X014a
IXST24N60B		48	24	2.5	170	1.3	0.83	X019
IXSH30N60B		55	30	2	140	2.5	0.62	X014a
IXSH30N60C		55	30	2.5	70	1.2	0.62	X014a
IXST30N60B		55	30	2	140	2.5	0.62	X019
IXST30N60C		55	30	2.5	70	1.2	0.62	X019
IXSH40N60B		75 ①	40	2.2	120	1.8	0.45	X014a
IXSH50N60B		75 ①	50	2.5	150	3.3	0.5	X014a
IXST40N60B		75 ①	40	2.2	120	1.8	0.45	X019
IXSK80N60B		160 ①	80	2.5	180	4.2	0.26	X020
IXSX80N60B		160 ①	80	2.5	180	4.2	0.26	X015
IXSA15N120B	1200	30	15	3.4	160	3.1	0.83	X011b
IXSP15N120B		30	15	3.4	160	3.1	0.83	X005a
IXSH15N120B		30	15	3.4	126	3.1	0.83	X014a
IXST15N120B		30	15	3.4	126	3.1	0.83	X019
IXSH35N120B		70	35	3.6	180	9	0.42	X014a
IXST35N120B		70	35	3.6	180	9	0.42	X019
IXSH45N120B		75 ①	45	3	380	13	0.42	X014a
IXST45N120B		75 ①	45	3	380	13	0.42	X019
IXSH35N140A	1400	70	35	4	400	12	0.42	X014a

① Currents may be limited by external package leads.

Package style

Outline drawings on pages 188 - 224

X005a **TO-220AB**
Weight = 4 g

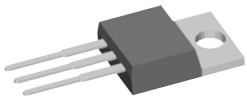

X011b **TO-263AA**
Weight = 2 g

X014a **TO-247AD**
Weight = 6 g

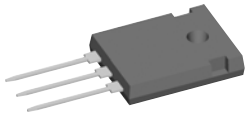

X015 **PLUS247**
Weight = 5 g

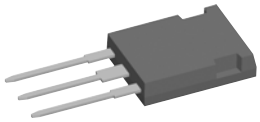

X019 **TO-268AA**
Weight = 5 g

X020 **TO-264**
Weight = 10 g

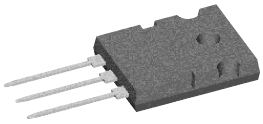

Discrete IGBT S series with SCSOA capability

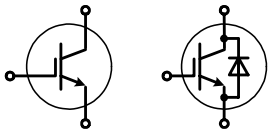

Medium Speed (1 kHz to 20 kHz), IGBT with freewheeling diode

Part Type ➤ New	V_{CES} max V	I_C max T_C=25°C A	I_C max T_C=110°C A	$V_{CE(sat)}$ max T_C=25°C V	t_{fi} typ T_J=25°C ns	E_{off} typ T_J=125°C mJ	R_{thJC} max IGBT	I_F 110°C Diode A	R_{thJC} Diode K/W	Fig. No
➤ IXSA10N60B2D1	600	20	10	2.5	165	0.79	1.25	11	2.5	X011b
➤ IXSP10N60B2D1		20	10	2.5	165	0.79	1.25	11	2.5	X005a
➤ IXSQ10N60B2D1		20	10	2.5	165	0.79	1.25	11	2.5	X017a
➤ IXSH10N60B2D1		20	10	2.5	165	0.79	1.25	11	2.5	X014a
➤ IXSA20N60B2D1		35	20	2.5	126	0.97	0.66	11	2.5	X011b
➤ IXSP20N60B2D1		35	20	2.5	126	0.97	0.66	11	2.5	X005a
➤ IXSQ20N60B2D1		35	20	2.5	126	0.97	0.66	21	1.6	X019
➤ IXSH20N60B2D1		35	20	2.5	126	0.97	0.66	21	1.6	X014a
➤ IXSH30N60B2D1		48	30	2.5	140	1.18	0.5	28	0.9	X014a
➤ IXST30N60B2D1		48	30	2.5	140	1.18	0.5	28	0.9	X019
➤ IXSH40N60B2D1	600	75 ①	40	1.7	82	0.4	0.42	30	0.9	X014a
➤ IXST40N60B2D1		75 ①	40	1.7	82	0.4	0.42	30	0.9	X019
IXSH15N120BD1	1200	30	15	3.4	150	1.5	0.83	15	0.9	X014a
IXST15N120BD1		30	15	3.4	150	1.5	0.83	15	0.9	X019
IXSK35N120BD1		70	35	3.6	180	5	0.42	35	0.65	X020
IXSR35N120BD1		70	30	3.6	180	5	0.5	30	0.83	X016a
IXSX35N120BD1		70	35	3.6	180	5	0.42	35	0.65	X015

① Currents may be limited by external package leads.

Package style

Outline drawings on pages 188 - 224

X005a **TO-220AB**
Weight = 4 g

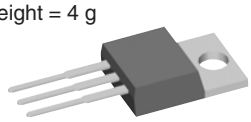

X011b **TO-263AA**
Weight = 2 g

X014a **TO-247AD**
Weight = 6 g

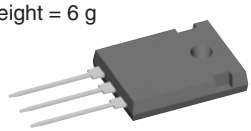

X015 **PLUS247**
Weight = 5 g

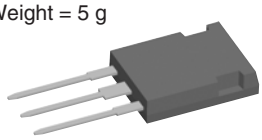

X016a **ISOPLUS247™**
Weight = 5 g

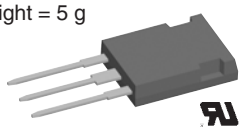

X019 **TO-268AA**
Weight = 5 g

X020 **TO-264**
Weight = 10 g

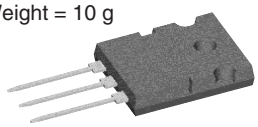

X027a **SOT-227B miniBLOC**
Weight = 30 g

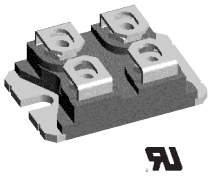

Discrete IGBT G Series

Low Saturation Voltage Types, single IGBT

Part Type ➤ New	V_{CES} max V	I_C max T_C=25°C A	I_C max T_C=90°C A	$V_{CE(sat)}$ max T_C=25°C V	t_{fi} typ T_J=25°C ns	E_{off} typ T_J=125°C mJ	R_{thJC} max K/W	Fig. No
IXGH60N60	600	75 ①	60	1.7	360	17	0.42	X014a
IXGK60N60		75	60	1.7	360	17	0.42	X020
IXGT60N60		75 ①	60	1.7	360	17	0.42	X019
IXGN60N60		100	60	1.7	360	17	0.5	X027a
➤ IXGN80N60A2		160 ①	80 ②	1.35	250	10	0.2	X027a
IXGN200N60A2		200 ①	100 ②	1.35	250	12	0.17	X027a
IXGA8N100	1000	16	8	2.7	390	3.7	2.3	X011b
IXGP8N100		16	8	2.7	390	3.7	2.3	X005a
IXGA20N100		40	20	3	280	3.5	0.83	X011b
IXGP20N100		40	20	3	280	3.5	0.83	X005a
IXGH20N100		40	20	3	280	3.5	0.83	X014a
IXGT20N100		40	20	3	280	3.5	0.83	X019
IXGA20N120	1200	40	20	2.5	380	9.5	0.83	X011b
IXGP20N120		40	20	2.5	380	9.5	0.83	X005a
IXGH20N120		40	20	2.5	380	9.5	0.83	X014a
IXGT20N120		40	20	2.5	380	9.5	0.83	X019
➤ IXGH40N120A2		75 ①	50	2	800	35	0.35	X014a
➤ IXGT40N120A2		75 ①	50	2	800	35	0.35	X019

① Currents may be limited by external package leads. ② @ T_C=110°C

Discrete IGBT G Series

Mid-Frequency Range (15 kHz - 40 kHz) single IGBT

Part Type ➤ New	V_{CES} max V	I_C max T_C=25°C A	I_C max T_C=110°C A	$V_{CE(sat)}$ max T_C=25°C V	t_{fi} typ T_J=25°C ns	E_{off} typ T_J=125°C mJ	R_{thJC} max K/W	Fig. No
IXGA7N60B	600	14	7 ③	2	150	0.6	2.3	X011b
IXGP7N60B		14	7 ③	2	150	0.6	2.3	X005a
IXGA7N60C		14	7 ③	2.7	45	0.22	2.3	X011b
IXGP7N60C		14	7 ③	2.7	45	0.22	2.3	X005a
IXGC16N60B2		28	13	2.3	80	0.35	0.83	X010a
IXGA16N60B2		40	16	2.3	80	0.35	0.83	X011b
IXGP16N60B2		40	16	2.3	80	0.35	0.43	X005a
IXGP30N60B2		45 ①	30	1.8	82	0.9	0.65	X005a
IXGH30N60B2		70	30	1.8	82	0.9	0.65	X014a
IXGT30N60B2		70	30	1.8	82	0.9	0.42	X019
IXGR40N60B2		60	33	1.9	82	1.1	0.74	X016a
IXGR50N60B2		68	36	2.2	65	1.55	0.6	X016a
IXGH40N60B2		75 ①	40	1.7	82	1.1	0.42	X014a
IXGT40N60B2		75 ①	40	1.7	82	1.1	0.42	X019
IXGR60N60B2		75 ①	47	2	100	2.8	0.5	X016a
IXGH50N60B2		75 ①	50	2	82	1.55	0.31	X014a
IXGT50N60B2		75 ①	50	2	82	1.55	0.31	X019
IXGH60N60B2		75 ①	60	1.8	100	2.8	0.25	X014a
IXGT60N60B2		75 ①	60	1.8	100	2.8	0.25	X019
IXGR120N60B		156 ①	102 ③	2.1	160	8.7	0.3	X016a
IXGK120N60B		200 ①	120 ③	2.1	160	8.7	0.21	X020
IXGX120N60B		200 ①	120 ③	2.1	160	8.7	0.21	X015
IXGN200N60B		200 ①	120 ③	2.1	160	8.7	0.21	X027a
➤ IXGH32N90B2	900	64	32	2.7	165	5.25	0.42	X014a
➤ IXGT32N90B2		64	32	2.7	165	5.25	0.42	X019
➤ IXGH50N90B2		75 ①	50	2.7	200	8.7	0.31	X014a
➤ IXGT50N90B2		75 ①	50	2.7	200	8.7	0.31	X019
➤ IXGA14N120B	1200	28	14	3.3	330	4.85	0.83	X011b
➤ IXGP14N120B		28	14	3.3	330	4.85	0.83	X005a
➤ IXGA15N120B2		30	15 ③	3.5	137	2.8	0.75	X011b
➤ IXGP15N120B2		30	15 ③	3.5	137	2.8	0.75	X005a
IXGA15N120B		30	15 ③	3.2	160	3.5	0.83	X011b
IXGP15N120B		30	15 ③	3.2	160	3.5	0.83	X005a
IXGH15N120B		30	15 ③	3.2	160	3.5	0.65	X014a
IXGT15N120B		30	15 ③	3.2	160	3.5	0.65	X019
➤ IXGQ20N120B		40	20	3.4	160	3.5	0.65	X017a
IXGH20N120B		40	20 ③	3.4	160	3.5	0.65	X014a
IXGT20N120B		40	20 ③	3.4	160	3.5	0.65	X019
IXGR35N120B		70	23 ③	3.3	160	8	0.5	X016a
IXGH28N120B		50	28 ③	3.5	160	5	0.5	X014a
IXGT28N120B		50	28 ③	3.5	160	5	0.5	X019
IXGH35N120B		70	35 ③	3.3	160	8	0.42	X014a
IXGT35N120B		70	35 ③	3.3	160	8	0.42	X019
IXGK35N120B		70	35 ③	3.3	160	8	0.35	X020
IXGX35N120B		70	35 ③	3.3	160	8	0.35	X015

① Currents may be limited by external package leads.
③ @ T_C=90°C

Package style

Outline drawings on pages 188 - 224

X005a **TO-220AB**
Weight = 4 g

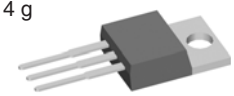

X010a **ISOPLUS220™**
Weight = 3 g

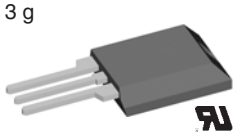

X011b **TO-263AA**
Weight = 2 g

X014a **TO-247AD**
Weight = 6 g

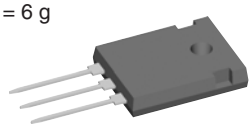

X015 **PLUS247**
Weight = 5 g

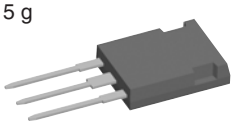

X016a **ISOPLUS247™**
Weight = 5 g

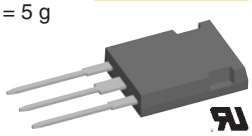

X019 **TO-268AA**
Weight = 5 g

X020 **TO-264**
Weight = 10 g

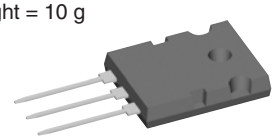

X027a/b **SOT-227B miniBLOC**
Weight = 30 g

Polar IGBTs

Mid-Frequency Range (15KHz-40KHz) IGBT/Diode Types

Part Type ➤ New	V_{CES} max V	I_{CP} / I_{CM} max $T_J \leq 150°C$ tp < 10 µs A	I_C max T_C=110°C A	$V_{CE(sat)}$ max T_C= 25°C V	t_{fi} typ T_J= 25°C ns	R_{thJC} max IGBT	Fig. No
➤ IXGK400N30A3	300	400	200 ①	1.15	250	0.125	X020
➤ IXGX400N30A3		400	200 ①	1.15	250	0.125	X015
➤ IXGN400N30A3		400	200 ①	1.15	250	0.125	X027a
➤ IXGN320N60A3	600	320	120 ①	1.25	300	0.17	X027a

① Currents may be limited by external package leads.

Discrete IGBT G Series

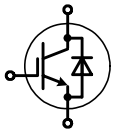

Mid-Frequency Range (15 kHz - 40 kHz) , IGBT with freewheeling diode

Part Type ➤ New	V_{CES} max V	I_C max T_C=25°C A	I_C max T_C=110°C A	$V_{CE(sat)}$ max T_C=25°C V	t_{fi} typ T_J=25°C ns	E_{off} typ T_J=125°C mJ	R_{thJC} max IGBT	I_F 110°C A	R_{thJC} Diode K/W	Fig. No
IXGC16N60B2D1	600	28	13	2.3	80	0.35	0.83	10	2.5	X010a
IXGA16N60B2D1		40	16	2.3	80	0.35	0.83	11	2.5	X011b
IXGP16N60B2D1		40	16	2.3	80	0.35	0.83	11	2.5	X005a
IXGH16N60B2D1		40	16	2.3	80	0.35	0.83	11	2.5	X014a
IXGH30N60B2D1		70	30	1.8	82	0.9	0.42	30	0.9	X014a
IXGT30N60B2D1		70	30	1.8	82	0.9	0.42	30	0.9	X019
IXGR40N60B2D1		60	33	1.9	82	1.1	0.75	25	1.1	X016a
IXGR50N60B2D1		60	36	2.2	65	1.55	0.6	39	0.85	X016a
IXGH40N60B2D1		75 ①	40	1.7	82	1.1	0.31	30	0.9	X014a
IXGT40N60B2D1		75 ①	40	1.7	82	1.1	0.31	30	0.9	X019
IXGR60N60B2D1		75 ①	47	2	100	2.8	0.5	39	0.85	X016a
IXGK50N60B2D1		75 ①	50	2	65	1.55	0.25	48	0.65	X020
IXGX50N60B2D1		75 ①	50	2	65	1.55	0.25	48	0.65	X015
IXGK60N60B2D1		75 ①	60	1.8	100	2.8	0.25	48	0.65	X020
IXGX60N60B2D1		75 ①	60	1.8	100	2.8	0.25	48	0.65	X015
➤ IXGR32N90B2D1	900	47	22	2.9	165	5.25	0.8	22	1.1	X016a
➤ IXGR50N90B2D1		40	19	2.9	200	8.7	1.25	22	1.1	X016a
➤ IXGH32N90B2D1		64	32	2.7	165	5.25	0.42	27	0.9	X014a
➤ IXGT32N90B2D1		64	32	2.7	165	5.25	0.42	27	0.9	X019
➤ IXGH50N90B2D1		75 ①	50	2.7	200	8.7	0.31	26	0.9	X014a
➤ IXGT50N90B2D1		75 ①	50	2.7	200	8.7	0.31	26	0.9	X019
➤ IXGH30N120B3D1	1200	50	30	3.5	160	4.6	0.5	28	0.9	X014a
➤ IXGT30N120B3D1		50	30	3.5	160	4.6	0.5	28	0.9	X019
➤ IXGH40N120B2D1		75 ①	40	3.5	140	8.3	0.35	30	0.9	X014a
➤ IXGT40N120B2D1		75 ①	40	3.5	140	8.3	0.35	30	0.9	X019

① Currents may be limited by external package leads.

Package style

Outline drawings on pages 188 - 224

X005a **TO-220AB**
Weight = 4 g

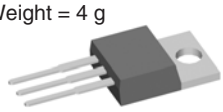

X010a **ISOPLUS220™**
Weight = 3 g

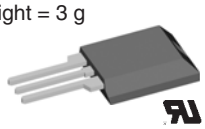

X013 **PLUS220 SMD**
Weight = 4 g

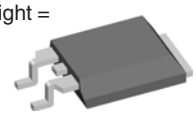

X014a **TO-247AD**
Weight = 6 g

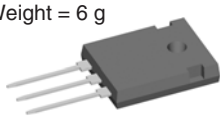

X015 **PLUS247**
Weight = 5 g

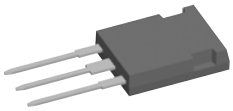

X016a **ISOPLUS247™**
Weight = 5 g

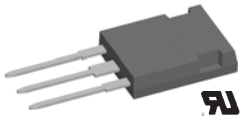

X019 **TO-268AA**
Weight = 5 g

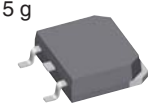

X020 **TO-264**
Weight = 10 g

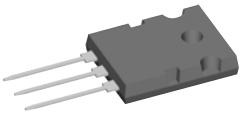

Discrete IGBT G Series for High Speed

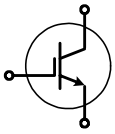

High Frequency Range (> 40 kHz), single IGBT

Part Type ➤ New	V_{CES} max V	I_C max T_C=25°C A	I_C max T_C=110°C A	$V_{CE(sat)}$ max T_C=25°C V	t_{fi} typ T_J=25°C ns	E_{off} typ T_J=125°C mJ	R_{thJC} max IGBT	Fig. No
IXGC16N60C2	600	20	8	3	35	0.15	2.00	X010a
IXGA16N60C2		40	16	3	35	0.15	0.83	X011b
IXGP16N60C2		40	16	3	35	0.15	0.83	X005a
IXGR40N60C2		56	26	2.7	32	0.5	0.74	X016a
IXGH30N60C2		70	30	2.5	32	0.4	0.65	X014a
IXGP30N60C2		70	30	2.5	32	0.4	0.65	X005a
IXGT30N60C2		70	30	2.5	32	0.4	0.65	X019
IXGH40N60C2		75 ①	40	2.5	32	0.5	0.42	X014a
IXGR50N60C2		75 ①	40	2.7	48	0.74	0.62	X016a
IXGT40N60C2		75 ①	40	2.5	32	0.5	0.42	X019
IXGR60N60C2		75 ①	48	2.7	35	0.5	0.32	X016a
IXGH50N60C2		75 ①	50	2.5	48	0.74	0.31	X014a
IXGT50N60C2		75 ①	50	2.5	48	0.74	0.31	X019
IXGR120N60C2		75 ①	60	2.7	45	1.5	0.42	X016a
IXGH60N60C2		75 ①	60	2.5	35	1.2	0.26	X014a
IXGT60N60C2		75 ①	60	2.5	35	1.2	0.26	X019
IXGN60N60C2		75 ①	60	2.5	35	1.2	0.26	X027a
➤ IXGK120N60C2		75 ①	75 ③	2.5	45	1.5	0.15	X020
➤ IXGX120N60C2		75 ①	75 ③	2.5	45	1.5	0.15	X015

① Currents may be limited by external package leads.
③ @ T_C=90°C

Discrete IGBT G Series for High Speed

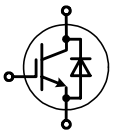

High Frequency Range (> 40 kHz), IGBT with freewheeling diode

Part Type ➤ New	V_{CES} max V	I_C max T_C=25°C A	I_C max T_C=110°C A	$V_{CE(sat)}$ max T_C=25°C V	t_{fi} typ T_J=25°C ns	E_{off} typ T_J=125°C mJ	R_{thJC} max IGBT	I_F 110°C A	R_{thJC} Diode K/W	Fig. No
➤ IXGC16N60C2D1	600	20	8	3	35	0.15	2	42	2.5	X010a
➤ IXGA16N60C2D1		40	16	3	35	0.15	0.83	12	2.5	X011b
➤ IXGP16N60C2D1		40	16	3	35	0.15	0.83	16	2.5	X005b
➤ IXGH16N60C2D1		40	16	3	35	0.15	0.83	11	2.5	X010a
➤ IXGR40N60C2D1		56	26	2.7	32	0.2	0.74	50	1.5	X016a
➤ IXGH30N60C2D1		70	30	2.5	32	0.4	0.65	30	0.9	X014a
➤ IXGT30N60C2D1		70	30	2.5	32	0.4	0.65	30	0.9	X019
➤ IXGH40N60C2D1		75	40	2.5	32	0.2	0.42	40	0.9	X014a
➤ IXGJ40N60C2D1		75 ①	40	2.5	32	0.2	0.42	40	0.9	X018
➤ IXGR50N60C2D1		75 ①	40	2.7	48	0.74	0.75	42	0.85	X016a
➤ IXGT40N60C2D1		75 ①	40	2.5	32	0.2	0.42	40	0.9	X019
➤ IXGR60N60C2D1		75 ①	48	2.7	35	1.2	0.65	60	0.85	X016a
➤ IXGK50N60C2D1		75	50	2.5	48	0.74	0.31	50	0.85	X020
➤ IXGX50N60C2D1		75 ①	50	2.5	48	0.74	0.31	50	0.85	X015
➤ IXGK60N60C2D1		75	60	2.5	35	1.2	0.26	60	0.85	X020
➤ IXGN60N60C2D1		75	60	2.5	35	1.2	0.26	39	0.85	X027a
➤ IXGT60N60C2D1		75 ①	60	2.5	35	1.2	0.26	60	0.85	X019
➤ IXGX60N60C2D1		75 ①	60	2.5	35	1.2	0.26	60	0.85	X015

Package style

Outline drawings on pages 188 - 224

X005a **TO-220AB**
Weight = 4 g

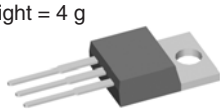

X010a **ISOPLUS220™**
Weight = 3 g

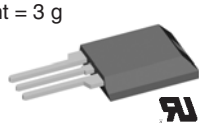

X011b **TO-263AA**
Weight = 2 g

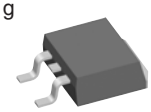

X014a **TO-247AD**
Weight = 6 g

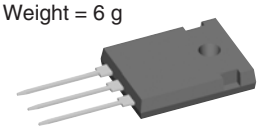

X015 **PLUS247**
Weight = 5 g

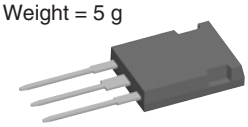

X016a **ISOPLUS247™**
Weight = 5 g

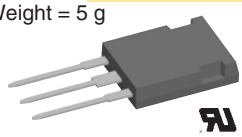

X019 **TO-268AA**
Weight = 5 g

X024c **ISOPLUS i4-PAC™**
Weight = 6 g

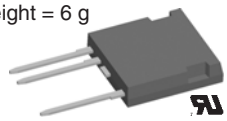

X027a **SOT-227B**
Weight = 30 g **miniBLOC**

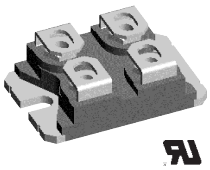

1700 V IGBT

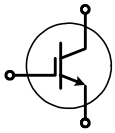

Low saturation voltage Types

Part Type ➤ New	V_{CES} max V	I_C max T_C=25°C A	I_C max T_C=110°C A	$V_{CE(sat)}$ max T_C=25°C V	E_{off} typ T_J=125°C mJ	R_{thJC} max IGBT	Fig. No
IXGH25N160	1600	75	35	2.5	20	0.42	X014a
IXGT25N160		75	35	2.5	20	0.42	X019
IXGH6N170	1700	12	6	4	2	1.65	X014a
IXGT6N170		12	6	4	2	1.65	X019
IXGH10N170		20	10	4	4.7	1.1	X014a
IXGT10N170		20	10	4	4.7	1.1	X019
IXGH16N170		32	16	3.5	8	0.65	X014a
IXGT16N170		32	16	3.5	8	0.65	X019
➤ IXGF32N170		26	12	3.5	13.5	0.65	X024c
IXGH24N170		50	24	3.3	12	0.5	X014a
IXGT24N170		50	24	3.3	12	0.5	X019
IXGH32N170		75 ①	32	3.3	14	0.35	X014a
IXGT32N170		75 ①	32	3.3	14	0.35	X019

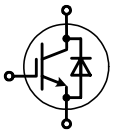

Low Saturation Voltage IGBT with SONIC-FRD Fast Recovery Diodes

Part Type ➤ New	V_{CES} max V	I_C max T_C=25°C A	I_C max T_C=90°C A	$V_{CE(sat)}$ max T_C=25°C V	t_{fi} typ T_J=25°C ns	E_{off} typ T_J=125°C mJ	R_{thJC} max IGBT	I_F 90°C A	R_{thJC} Diode K/W	Fig. No
➤ IXGR32N170H1	1700	38	20	3.5	250	13.6	0.65	14	1.5	X016a
IXGX32N170H1		75 ①	32	3.3	250	22	0.35	60	0.3	X015

① Currents may be limited by external package leads.

1700 V IGBT

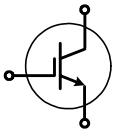

High speed Types

Part Type ➤ New	V_{CES} max V	I_C max T_C=25°C A	I_C max T_C=110°C A	$V_{CE(sat)}$ max T_C=25°C V	E_{off} typ T_J=125°C mJ	R_{thJC} max IGBT	Fig. No
IXGH6N170A	1700	6	3	7	0.26	1.65	X014a
IXGT6N170A		6	3	7	0.26	1.65	X019
IXGH10N170A		10	5	6	0.6	1.1	X014a
IXGT10N170A		10	5	6	0.6	1.1	X019
IXGH16N170A		16	8	5	1.1	0.65	X014a
IXGT16N170A		16	8	5	1.1	0.65	X019
IXGH24N170A		24	16	6	1.7	0.5	X014a
IXGT24N170A		24	16	6	1.7	0.5	X019
IXGH32N170A		32	21	5	3	0.35	X014a
IXGT32N170A		32	21	5	3	0.35	X019

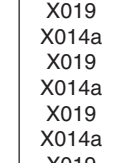

High Speed IGBT with SONIC-FRD Fast Recovery Diodes

Part Type ➤ New	V_{CES} max V	I_C max T_C=25°C A	I_C max T_C=90°C A	$V_{CE(sat)}$ max T_C=25°C V	t_{fi} typ T_J=25°C ns	E_{off} typ T_J=125°C mJ	R_{thJC} max IGBT	I_F 90°C A	R_{thJC} Diode K/W	Fig. No
➤ IXGR16N170AH1	1700	16	8	5	40	1.1	1.04	14	1.5	X016a
➤ IXGH16N170AH1		16	8	5	40	1.1	0.65	20	0.9	X014a
➤ IXGT16N170AH1		16	8	5	40	1.1	0.65	20	0.9	X019
➤ IXGH24N170AH1		24	16	6	45	1.7	0.5	17	0.9	X014a
➤ IXGT24N170AH1		24	16	6	45	1.7	0.5	17	0.9	X019
➤ IXGR32N170AH1		26	17	5.2	50	2.4	0.65	14	1.5	X016a
IXGX32N170AH1		32	21	5	50	3	0.35	60	0.3	X015

Very High Voltage IGBTs

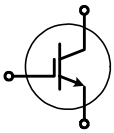

Part Type ➤ New	V_{CES} max V	I_C max T_C=25°C A	I_C max T_C=90°C A	$V_{CE(sat)}$ max T_C=25°C V	t_{fi} typ T_J=25°C ns	E_{off} typ T_J=125°C mJ	R_{thJC} max IGBT	Fig. No
IXLF19N250A	2500	32	19	3.9	250	30	0.5	X024c
➤ IXEL40N400	4000	62	40	4	450	220	0.33	X022c

Package style

Outline drawings on pages 188 - 224

X014a **TO-247AD**
Weight = 6 g

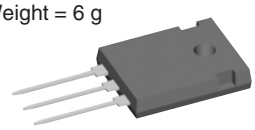

X015 **PLUS247**
Weight = 5 g

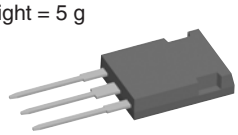

X016a **ISOPLUS247™**
Weight = 5 g

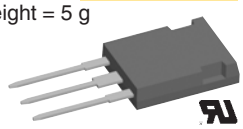

X019 **TO-268AA**
Weight = 5 g

X022s **ISOPLUS264™**
Weight = 10 g

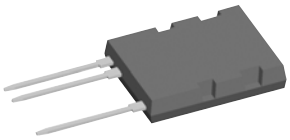

X024c **ISOPLUS i4-PAC™**
Weight = 6 g

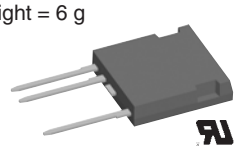

BiMOSFET™

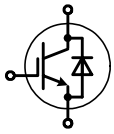

High Speed Types in 1600 V

Type	V_{CES} V	I_{C25} T_C =25°C A	I_{C90} T_C =90°C A	$V_{CE(sat)\ typ}$ T_C =25°C V	Gate drive V	$t_{f\ typ}$ T_C =125°C ns	R_{thJC} K/W	Fig. No.
IXBP5N160G	1600	5.7	3.5	4.9	10	70	1.75	X005a
IXBH5N160G		5.7	3.5	4.9	10	70	1.75	X014a
IXBF9N160G		7	5	4.9	10	70	1.75	X024c
IXBH9N160G		9	5	4.9	10	70	1.25	X014a
IXBF40N160		28	16	6.2	15	40	0.50	X024c
IXBH40N160		33	20	6.2	15	40	0.35	X014a

Package style
Outline drawings on page 188 - 224

X005a **TO-220AB**
Weight = 4 g

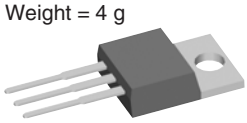

1700 V Types

High speed								
IXBH16N170A	1700	16	10	4.7	15	50	0.83	X014a
IXBT16N170A		16	10	4.7	15	50	0.83	X019
IXBT42N170A		42	25	5.0	15	50	0.35	X019
Low $V_{CE(sat)}$								
IXBH6N170	1700	10	6	2.3	15	1200	1.8	X014a
IXBT6N170		10	6	2.3	15	1200	1.8	X019
IXBH10N170		16	10	2.3	15	1200	1.25	X014a
IXBT10N170		16	10	2.3	15	1200	1.25	X019
IXBH16N170		25	16	2.3	15	1200	0.83	X014a
IXBT16N170		25	16	2.3	15	1200	0.83	X019
IXBH42N170		70	42	2.3	15	1200	0.35	X014a
IXBT 42N170		70	42	2.3	15	1200	0.35	X019

X014a **TO-247AD**
Weight = 6 g

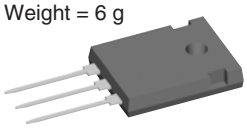

BiMOSFET™ includes a body diode, which can carry rated current
High voltage, high speed, pulse current applications

X016a **ISOPLUS247™**
Weight = 5 g

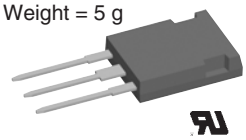

RIGBT

IGBT with Reverse Blocking Capability

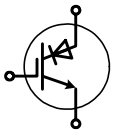

- Applications: lighting control, AC motor control, matrix converters
- No extra on state losses for reverse blocking feature

Type ➤ New	Configuration	V_{CES} max V	I_{C25} T_C =25°C A	I_{C90} T_C =90°C A	$V_{CE(sat)\ typ}$ T_C =25°C V	$t_{rr\ typ}$ T_C =125°C µs	$t_{f\ typ}$ T_C =125°C ns	Fig. No.
➤ **IXRP15N120**	single RIGBT	1200	25	15	2.5	0.3	46	X005a
IXRH40N120	single RIGBT	1200	55	35	2.2	1.6	46	X014a
➤ **IXRR40N120**	single RIGBT	1200	45	28	2.2	1.6	46	X016a

preliminary data, typical values

X019 **TO-268**
Weight = 5 g

X024c **ISOPLUS i4-PAC™**
Weight = 6 g

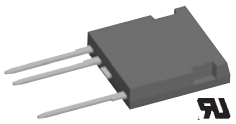

PolarHT™ N-Channel Power MOSFETs

Low Voltage Types

Part Type ➤ New	V_{DSS} max V	I_D(cont) max T_C=25°C A	$R_{DS(on)}$ max T_C=25°C Ω	C_{iss} typ pF	Q_g typ nC	t_{rr} max ns	R_{thJC} max K/W	P_D W	Fig. No	Package style (Outline drawings on pages 188 - 224)
➤ IXTP110N055P	55	110*	0.0135	2210	76	80	0.38	330	X005a	X005a TO-220AB Weight = 4 g
➤ IXTA110N055P		110*	0.0135	2210	76	80	0.38	330	X011b	
➤ IXTQ110N055P		110*	0.0135	2210	76	80	0.38	330	X017a	
➤ IXTQ150N06P	60	150*	0.01	3000	118	120	0.31	480	X017a	
➤ IXTQ200N06P		200*	0.006	5400	200	80	0.21	714	X017a	
➤ IXTP75N10P	100	75	0.025	2250	74	120	0.42	360	X005a	
➤ IXTA75N10P		75	0.025	2250	74	120	0.42	360	X011b	
➤ IXTQ75N10P		75	0.025	2250	74	120	0.42	360	X017a	
IXTQ110N10P		110*	0.015	3550	110	130	0.31	480	X017a	X007a TO-220FPAB Weight = 5 g
IXTT110N10P		110*	0.015	3550	110	130	0.31	480	X019	
IXTQ140N10P		140*	0.011	4700	155	120	0.25	600	X017a	
IXTT140N10P		140*	0.011	4700	155	120	0.25	600	X019	
➤ IXTQ170N10P		170*	0.009	6000	198	120	0.21	714	X017a	
➤ IXTT170N10P		170*	0.009	6000	198	120	0.21	714	X019	
➤ IXTK170N10P		170*	0.009	6000	198	120	0.21	714	X020	
➤ IXTK200N10P		200*	0.0075	7600	240	100	0.18	800	X020	
➤ IXTR200N10P		120*	0.008	7600	240	100	0.5	300	X016a	X011b TO-263AB Weight = 2 g
➤ IXTP62N15P	150	62	0.04	2250	70	150	0.42	350	X005a	
➤ IXTA62N15P		62	0.04	2250	70	150	0.42	350	X011b	
➤ IXTQ62N15P		62	0.04	2250	70	150	0.42	350	X017a	
IXTQ96N15P		96*	0.024	3500	110	150	0.31	480	X017a	
IXTT96N15P		96*	0.024	3500	110	150	0.31	480	X019	
➤ IXTQ120N15P		120*	0.016	4900	150	150	0.25	600	X017a	
➤ IXTT120N15P		120*	0.016	4900	150	150	0.25	600	X019	
➤ IXTQ150N15P		150*	0.013	5800	190	150	0.21	714	X017a	X014a TO-247AD Weight = 6 g
➤ IXTK150N15P		150*	0.013	5800	190	150	0.21	714	X020	
➤ IXTK180N15P		180*	0.01	7000	240	150	0.18	800	X020	
➤ IXTP50N20P	200	50	0.06	2250	70	150	0.42	360	X005a	
➤ IXTP50N20PM		20	0.066	2250	70	150	1.66	90	X007a	
➤ IXTA50N20P		50	0.06	2250	70	150	0.42	360	X011b	
➤ IXTQ50N20P		50	0.06	2250	70	150	0.42	360	X017a	
IXTQ74N20P		74	0.034	3300	107	160	0.31	480	X017a	
IXTT74N20P		74	0.034	3300	107	160	0.31	480	X019	
IXTQ96N20P		96*	0.024	4800	145	160	0.25	600	X017a	X016a ISOPLUS247™ DCB isolated package Weight = 5 g
IXTH96N20P		96*	0.024	4800	145	160	0.25	600	X014a	
IXTT96N20P		96*	0.024	4800	145	160	0.25	600	X019	
➤ IXTQ120N20P		120*	0.022	6000	152	180	0.21	714	X017a	
➤ IXTK120N20P		120*	0.022	6000	152	180	0.21	714	X020	
➤ IXTK140N20P		140*	0.018	7500	240	180	0.18	800	X020	
➤ IXTP42N25P	250	42	0.084	2300	70	200	0.42	300	X005a	
➤ IXTA42N25P		42	0.084	2300	70	200	0.42	300	X011b	
➤ IXTQ42N25P		42	0.084	2300	70	200	0.42	300	X017a	X017a TO-3P Weight = 5 g
IXTQ64N25P		64	0.049	3450	105	200	0.31	400	X017a	
IXTT64N25P		64	0.049	3450	105	200	0.31	400	X019	
IXTQ82N25P		82	0.035	4800	142	200	0.25	500	X017a	
IXTT82N25P		82*	0.035	4800	142	200	0.25	500	X019	
IXTK82N25P		82*	0.035	4800	142	200	0.25	500	X020	
IXTQ100N25P		100*	0.027	6300	185	200	0.21	600	X017a	
IXTK100N25P		100	0.027	6300	185	200	0.21	600	X020	
IXTT100N25P		100*	0.027	6300	185	200	0.21	600	X019	X019 TO-268AA Weight = 5 g
➤ IXTK120N25P		120*	0.024	8000	185	200	0.18	700	X020	
➤ IXTP36N30P	300	36	0.11	2250	70	250	0.42	300	X005a	
➤ IXTA36N30P		36	0.11	2250	70	250	0.42	300	X011b	
➤ IXTQ36N30P		36	0.11	2250	70	250	0.42	300	X017a	
IXTQ52N30P		52	0.066	3490	110	250	0.31	400	X017a	
IXTT52N30P		52	0.066	3490	110	250	0.31	400	X019	
IXTQ69N30P		69	0.049	4960	156	250	0.25	500	X017a	X020 TO-264 Weight = 10 g
IXTT69N30P		69	0.049	4960	156	250	0.25	500	X019	
IXTQ88N30P		88*	0.04	6300	180	250	0.21	600	X017a	
IXTH88N30P		88*	0.04	6300	180	250	0.21	600	X014a	
IXTK88N30P		88	0.04	6300	180	250	0.21	600	X020	
IXTT88N30P		88*	0.04	6300	180	250	0.21	600	X019	
IXTK102N30P		102*	0.033	7500	224	250	0.18	700	X020	

Note * - Drain and source currents may be limited by external package leads. Note: Performance and availability are subject to change at IXYS' discretion.

PolarHV™ Power MOSFETs

High Voltage Types

Part Type ➤ New	V_{DSS} max V	I_D(cont) max T_C=25°C A	$R_{DS(on)}$ max T_C=25°C Ω	C_{iss} typ pF	Q_g typ nC	t_{rr} max ns	R_{thJC} max K/W	P_D W	Fig. No
➤ IXTY1R6N50P	500	1.6	6	120	2	400	3.00	42.0	X004
➤ IXTP1R6N50P		1.6	6	120	2	400	3.00	42.0	X005a
➤ IXTY2R4N50P		2.4	3.5	225	7.25	400	2.5	50	X004
➤ IXTP2R4N50P		2.4	3.5	225	7.25	400	2.5	50	X005a
➤ IXTY3N50P		3.6	2	409	9.3	400	1.80	70	X004
➤ IXTP3N50P		3.6	2	409	9.3	400	1.80	70	X005a
➤ IXTA3N50P		3.6	2	409	9.3	400	1.80	70	X011b
➤ IXTY5N50P		5	1.3	600	12	400	1.5	83.3	X004
➤ IXTP5N50P		5	1.3	600	12	400	1.5	83.3	X005a
➤ IXTA5N50P		5	1.3	600	12	400	1.5	83.3	X011b
➤ IXTP6N50P		6	1	750	15	400	1.2	105	X005a
➤ IXTA6N50P		6	1	750	15	400	1.2	105	X011b
➤ IXTA8N50P		8	0.8	1200	21	400	1.00	150	X011b
➤ IXTP8N50P		8	0.8	1200	21	400	1.00	150	X005a
➤ IXTP8N50PM		4	0.88	1200	21	400	3	41	X007a
➤ IXTI12N50P		12	0.5	1689	30	400	0.62	200	X008
➤ IXTP12N50P		12	0.5	1689	30	400	0.62	200	X005a
➤ IXTP12N50PM		6	0.55	1800	30	400	2.5	50	X007a
➤ IXTP16N50P		16	0.4	2110	40	400	0.42	300	X005a
➤ IXTA16N50P		16	0.4	2110	40	400	0.42	300	X011b
➤ IXTQ16N50P		16	0.4	2110	40	400	0.42	300	X017a
➤ IXTV22N50P		22	0.27	2629	50	400	0.35	350	X009
➤ IXTV22N50PS		22	0.27	2629	50	400	0.35	350	X013
➤ IXTQ22N50P		22	0.27	2629	50	400	0.35	350	X017a
➤ IXTH22N50P		22	0.27	2630	50	400	0.35	350	X014a
➤ IXTV26N50P		26	0.23	3600	65	300	0.31	400	X009
➤ IXTV26N50PS		26	0.23	3600	66	300	0.31	400	X013
➤ IXTQ26N50P		26	0.23	3600	67	300	0.31	400	X017a
➤ IXTT26N50P		26	0.23	3600	68	300	0.31	400	X019
➤ IXTC26N50P		14	0.26	3600	96	400	0.95	130	X010a
➤ IXTV30N50P		30	0.2	4150	72	400	0.27	460	X009
➤ IXTV30N50PS		30	0.2	4150	72	400	0.27	460	X013
➤ IXTH30N50P		30	0.2	4150	72	400	0.27	460	X014a
➤ IXTQ30N50P		30	0.2	4150	72	400	0.27	460	X017a
➤ IXTT30N50P		30	0.2	4150	72	400	0.27	460	X019
➤ IXTV36N50P		36	0.17	4770	82	400	0.23	540	X009
➤ IXTV36N50PS		36	0.17	4770	82	400	0.23	540	X013
➤ IXTH36N50P		36	0.17	4770	82	400	0.23	540	X014a
➤ IXTQ36N50P		36	0.17	4770	82	400	0.23	540	X017a
➤ IXTT36N50P		36	0.17	4770	82	400	0.23	540	X019
➤ IXTQ44N50P		44	0.14	5440	98	400	0.19	650	X017a
➤ IXTU1R4N60P	600	1.4	9.0	140	5.2	500	2.5	50	X003
➤ IXTP1R4N60P		1.4	9.0	140	5.2	500	2.5	50	X005a
➤ IXTY1R4N60P		1.4	9.0	140	5.2	500	2.5	50	X004
➤ IXTP2N60P		2	4.7	205	4	500	2.50	50	X005a
➤ IXTY2N60P		2	4.7	205	4	500	2.50	50	X004
➤ IXTY3N60P		3	2.8	370	8	500	1.80	70	X004
➤ IXTP3N60P		3	2.8	370	8	500	1.80	70	X005a
➤ IXTA3N60P		3	2.8	370	8	500	1.80	70	X011b
➤ IXTP4N60P		4	1.9	560	12	500	1.50	83.0	X005a
➤ IXTA4N60P		4	1.9	560	12	500	1.50	83.0	X011b
➤ IXTP5N60P		5	1.6	690	14	500	1.25	100	X005a
➤ IXTA5N60P		5	1.6	690	14	500	1.25	100	X011b
➤ IXTA7N60P		7	1	1000	20	500	1.00	125	X011b
➤ IXTP7N60P		7	1	1000	20	500	1.00	125	X005a
➤ IXTA10N60P		10	0.74	1500	30	500	0.62	166	X011b
➤ IXTI10N60P		10	0.74	1500	30	500	0.62	166	X008
➤ IXTP10N60P		10	0.74	1500	30	500	0.62	166	X005a
➤ IXTP10N60PM		5	0.81	1500	30	500	2.5	50	X007a
➤ IXTP14N60P		14	0.55	2200	40	500	0.42	300	X005a
➤ IXTA14N60P		14	0.55	2200	40	500	0.42	300	X011b
➤ IXTQ14N60P		14	0.55	2200	40	500	0.42	300	X017a
➤ IXTV18N60P		18	0.42	3000	50	500	0.35	360	X009

Note: Performance and availability are subject to change at IXYS' discretion.

Package style

Outline drawings on pages 188 - 224

X003 **TO-251AA**
Weight = 0.3 g

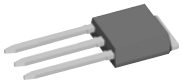

X004 **TO-252 AA**
Weight = 0.3 g

X005a **TO-220AB**
Weight = 4 g

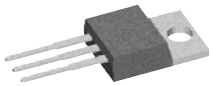

X007a **TO-220FPAB**
Weight = 5 g

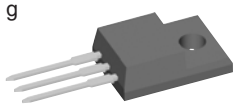

X008 **TO-262 i2-PAC**
Weight = 5 g

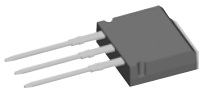

X009 **PLUS220**
Weight = 4 g

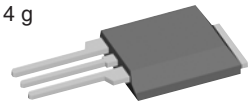

X010a **ISOPLUS220™**
Weight = 3 g

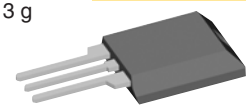

X011b **TO-263AB**
Weight = 2 g

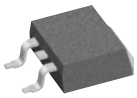

X013 **PLUS220 SMD**
Weight = 2 g

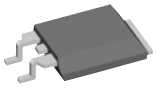

X014a **TO-247AD**
Weight = 6 g

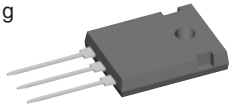

X017a **TO-3P**
Weight = 5 g

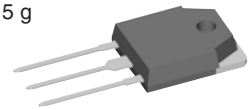

X019 **TO-268AA**
Weight = 5 g

PolarHV™ Power MOSFETs

High Voltage Types

Part Type ➤ New	V_{DSS} max V	I_D(cont) max T_C=25°C A	$R_{DS(on)}$ max T_C=25°C Ω	C_{iss} typ pF	Q_g typ nC	t_{rr} max ns	R_{thJC} max K/W	P_D W	Fig. No
➤ IXTV18N60PS	600	18	0.42	3000	50	500	0.35	360	X013
➤ IXTQ18N60P		18	0.42	3000	50	500	0.35	360	X017a
➤ IXTV22N60P		22	0.35	3600	62	500	0.31	400	X009
➤ IXTV22N60PS		22	0.35	3600	62	500	0.31	400	X013
➤ IXTQ22N60P		22	0.35	3600	62	500	0.31	400	X017a
➤ IXTV26N60P		26	0.27	4100	126	500	0.27	460	X009
➤ IXTV26N60PS		26	0.27	4100	126	500	0.27	460	X013
➤ IXTH26N60P		26	0.27	4100	126	500	0.27	460	X014a
➤ IXTQ26N60P		26	0.27	4100	126	500	0.27	460	X017a
➤ IXTT26N60P		26	0.27	4100	126	500	0.27	460	X019
➤ IXTV30N60P		30	0.24	5050	82	500	0.23	540	X009
➤ IXTV30N60PS		30	0.24	5050	82	500	0.23	540	X013
➤ IXTH30N60P		30	0.24	5050	82	500	0.23	540	X014a
➤ IXTQ30N60P		30	0.24	5050	82	500	0.23	540	X017a
➤ IXTT30N60P		30	0.24	5050	82	500	0.23	540	X019
➤ IXTA2N80P	800	2	6	370	8	650	1.8	70	X011b
➤ IXTP2N80P		2	6	370	8	650	1.8	70	X005a
➤ IXTY2N80P		2	6	370	8	650	1.8	70	X004
➤ IXTA4N80P		3.5	3	690	15	650	1.25	100	X011b
➤ IXTP4N80P		3.5	3	690	15	650	1.25	100	X005a

Note: Performance and availability are subject to change at IXYS' discretion.

PolarHT™ HiPerFET with Fast Intrinsic Diode

Low Voltage Types

Part Type ➤ New	V_{DSS} max V	I_D(cont) max T_C=25°C A	$R_{DS(on)}$ max T_C=25°C Ω	C_{iss} typ pF	Q_g typ nC	t_{rr} max ns	R_{thJC} max K/W	P_D W	Fig. No
➤ IXFH110N10P	100	110*	0.015	3550	110	200	0.31	480	X014a
➤ IXFV110N10P		110*	0.015	3550	110	200	0.31	480	X009
➤ IXFV110N10PS		110*	0.015	3550	110	200	0.31	480	X013
➤ IXFC110N10P		66*	0.017	3550	110	200	0.95	160	X010a
➤ IXFH140N10P		140*	0.011	4700	155	200	0.25	600	X014a
➤ IXFT140N10P		140*	0.011	4700	155	200	0.25	600	X019
➤ IXFH170N10P		170*	0.009	6000	198	200	0.21	714	X014a
➤ IXFK170N10P		170*	0.009	6000	198	200	0.21	714	X020
➤ IXFK200N10P		200*	0.0075	7600	240	140	0.18	833	X020
➤ IXFX200N10P		200*	0.0075	7600	240	140	0.18	833	X015
➤ IXFR200N10P		133*	0.008	7600	240	140	0.42	350	X016a
➤ IXFN200N10P		200*	0.0075	7600	240	140	0.18	833	X027a
➤ IXFH96N15P	150	96*	0.024	3500	110	200	0.31	480	X014a
➤ IXFV96N15P		96*	0.024	3500	110	200	0.31	480	X009
➤ IXFV96N15PS		96*	0.024	3500	110	200	0.31	480	X013
➤ IXFC96N15P		58	0.026	3500	110	200	1.25	120	X010a
➤ IXFH120N15P		120*	0.016	4900	150	200	0.25	600	X014a
➤ IXFT120N15P		120*	0.016	4900	150	200	0.25	600	X019
➤ IXFH150N15P		150*	0.013	5800	190	200	0.21	714	X014a
➤ IXFK150N15P		150*	0.013	5800	190	200	0.21	714	X020
➤ IXFK180N15P		180*	0.011	7000	240	200	0.18	833	X020
➤ IXFR180N15P		94*	0.013	7000	240	200	0.5	250	X016a
➤ IXFN180N15P		180*	0.011	7000	240	200	0.18	833	X027a
➤ IXFX180N15P		180*	0.011	7000	240	200	0.18	833	X015
➤ IXFH74N20P	200	74	0.034	3300	107	200	0.31	480	X014a
➤ IXFV74N20P		74*	0.034	3300	107	200	0.31	480	X009
➤ IXFV74N20PS		74*	0.034	3300	107	200	0.31	480	X013
➤ IXFC74N20P		35	0.036	3300	107	200	1.25	100	X010a
➤ IXFH96N20P		96*	0.024	4800	145	200	0.25	600	X014a
➤ IXFT96N20P		96*	0.024	4800	145	200	0.25	600	X019
➤ IXFV96N20P		96*	0.024	4800	145	200	0.25	600	X009

Note 1 - performance and availability are subject to change at the discretion of IXYS
Note 2. * - Drain and source currents may be limited by external package leads.

Package style

Outline drawings on pages 188 - 224

X004 **TO-252AA**
Weight = 0.3 g

X005a **TO-220AB**
Weight = 4 g

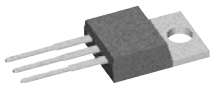

X009 **PLUS220**
Weight = 4 g

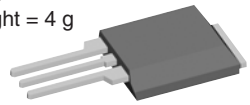

X010a **ISOPLUS220™**
Weight = 3 g

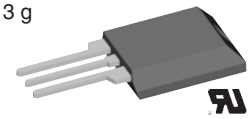

X011b **TO-263AB**
Weight = 2 g

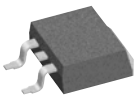

X013 **PLUS220 SMD**
Weight = 2 g

X014a **TO-247AD**
Weight = 6 g

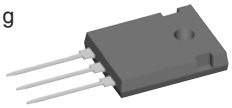

X016a **ISOPLUS247™**
Weight = 5 g

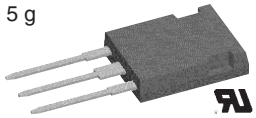

X017a **TO-3P**
Weight = 5 g

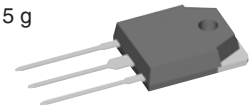

X019 **TO-268AA**
Weight = 5 g

X020 **TO-264**
Weight = 10 g

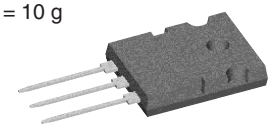

PolarHT™ HiPerFET with Fast Intrinsic Diode

Low Voltage Types

Part Type ➤ New	V_{DSS} max V	I_D(cont) max T_C=25°C A	$R_{DS(on)}$ max T_C=25°C Ω	C_{iss} typ pF	Q_g typ nC	t_{rr} max ns	R_{thJC} max K/W	P_D W	Fig. No
➤ IXFH120N20P	200	120*	0.022	6000	185	150	0.21	714	X014a
➤ IXFK120N20P		120*	0.022	6000	185	150	0.21	714	X020
➤ IXFK140N20P		140*	0.018	7500	240	150	0.18	833	X020
➤ IXFR140N20P		90*	0.022	7500	240	150	0.5	300	X016a
➤ IXFN140N20P		140*	0.018	7500	240	150	0.18	833	X027a
➤ IXFH100N25P	250	100*	0.027	6300	185	200	0.21	600	X014a
➤ IXFX120N25P		120*	0.024	8000	185	200	0.18	833	X015
➤ IXFK120N25P		120*	0.024	8000	185	200	0.18	833	X020
➤ IXFH52N30P	300	52	0.066	3490	110	200	0.31	400	X014a
➤ IXFV52N30P		52	0.066	3490	110	200	0.31	400	X009
➤ IXFV52N30PS		52	0.066	3490	110	200	0.31	400	X013
➤ IXFC52N30P		31	0.072	3490	110	200	1.25	100	X010a
➤ IXFH69N30P		69	0.049	4960	156	200	0.25	500	X014a
➤ IXFT69N30P		69	0.049	4960	156	200	0.25	500	X019
➤ IXFH88N30P		88	0.04	6300	180	200	0.21	600	X014a
➤ IXFK88N30P		88	0.04	6300	180	200	0.21	600	X020
➤ IXFK102N30P		102*	0.033	7500	224	200	0.18	700	X020
➤ IXFR102N30P		60	0.036	7500	224	200	0.5	250	X016a
➤ IXFN102N30P		102*	0.033	7500	224	200	0.18	700	X027a
➤ IXFK140N30P		140*	0.024	14000	185	200	0.12	1040	X020
➤ IXFN140N30P		140*	0.024	14000	185	200	0.18	700	X027a
➤ IXFR140N30P		82*	0.027	14000	185	200	0.35	360	X016a
➤ IXFX140N30P		140*	0.024	14000	185	200	0.12	1040	X015

PolarHV™ HiPerFETs with Fast Intrinsic Diode

High Voltage Types

Part Type ➤ New	V_{DSS} max V	I_D(cont) max T_C=25°C A	$R_{DS(on)}$ max T_C=25°C Ω	C_{iss} typ pF	Q_g typ nC	t_{rr} max ns	R_{thJC} max K/W	P_D W	Fig. No
➤ IXFP3N50PM	500	2.7	2	409	9.3	200	3.5	36	X007a
➤ IXFP5N50PM		3.2	1.4	600	12	200	3.3	38	X007a
➤ IXFP8N50PM		4	0.8	1200	21	200	3	41	X007a
➤ IXFP12N50P		12	0.5	1689	30	200	0.62	200	X005a
➤ IXFA12N50P		12	0.5	1689	30	200	0.62	200	X011b
➤ IXFP12N50PM		5.4	0.55	1689	30	200	2.5	50	X007a
➤ IXFP16N50P		16	0.4	2250	43	200	0.42	300	X005a
➤ IXFA16N50P		16	0.4	2250	43	200	0.42	300	X011b
➤ IXFH16N50P		16	0.4	2250	43	200	0.42	300	X014a
➤ IXFC16N50P		10	0.45	2250	43	200	1.25	100	X010a
➤ IXFV22N50P		22	0.27	3150	50	200	0.35	350	X009
➤ IXFV22N50PS		22	0.27	3150	50	200	0.35	350	X013
➤ IXFH22N50P		22	0.27	3150	50	200	0.35	350	X014a
➤ IXFV26N50P		26	0.23	3600	60	200	0.31	400	X009
➤ IXFV26N50PS		26	0.23	3600	60	200	0.31	400	X013
➤ IXFH26N50P		26	0.23	3600	60	200	0.31	400	X014a
➤ IXFC26N50P		15	0.26	3600	60	200	0.95	130	X010a
➤ IXFV30N50P		30	0.2	4000	72	200	0.27	470	X009
➤ IXFV30N50PS		30	0.2	4000	72	200	0.27	470	X013
➤ IXFH30N50P		30	0.2	4000	72	200	0.27	470	X014a
➤ IXFT30N50P		30	0.2	4000	72	200	0.27	470	X019
➤ IXFV36N50P		36	0.17	4800	82	200	0.23	550	X009
➤ IXFV36N50PS		36	0.17	4800	82	200	0.23	550	X013
➤ IXFH36N50P		36	0.17	4800	82	200	0.23	550	X014a
➤ IXFT36N50P		36	0.19	4800	82	200	0.23	550	X019
➤ IXFC36N50P		19	0.17	4800	82	200	0.75	166	X010a
➤ IXFR36N50P		24	0.2	4800	82	200	0.8	156	X016a
➤ IXFH44N50P		44	0.14	5500	104	200	0.19	670	X014a
➤ IXFT44N50P		44	0.14	5500	104	200	0.19	670	X019
➤ IXFK44N50P		44	0.14	5500	104	200	0.19	670	X020

Note 1 - performance and availability are subject to change at the discretion of IXYS
Note 2. * - Drain and source currents may be limited by external package leads.

Package style

Outline drawings on pages 188 - 224

X009 **PLUS220**
Weight = 4 g

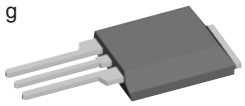

X010a **ISOPLUS220™**
Weight = 3 g

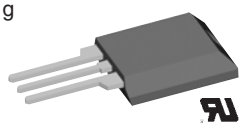

X013 **PLUS220 SMD**
Weight = 4 g

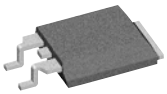

X014a **TO-247AD**
Weight = 6 g

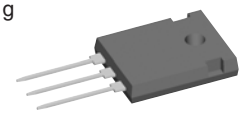

X015 **PLUS247**
Weight = 5 g

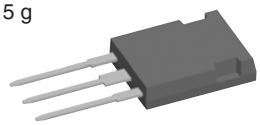

X016a **ISOPLUS247™**
Weight = 5 g

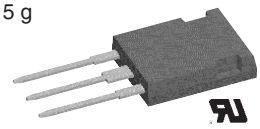

X019 **TO-268AA**
Weight = 5 g

X020 **TO-264**
Weight = 10 g

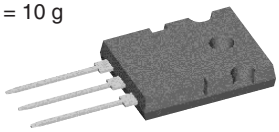

X027a **SOT-227B miniBLOC**
Weight = 30 g

PolarHV™ HiPerFETs with Fast Intrinsic Diode

High Voltage Types

Part Type ➤ New	V_{DSS} max V	I_D(cont) max T_C=25°C A	$R_{DS(on)}$ max T_C=25°C Ω	C_{iss} typ pF	Q_g typ nC	t_{rr} max ns	R_{thJC} max K/W	P_D W	Fig. No
➤ IXFR44N50P	500	24	0.15	5500	104	200	0.6	210	X016a
➤ IXFX64N50P		64	0.085	7000	150	200	0.42	830	X015
➤ IXFK64N50P		64	0.085	7000	150	200	0.15	830	X020
➤ IXFR64N50P		35	0.1	7000	150	200	0.42	300	X016a
➤ IXFN64N50P		52	0.085	7000	150	200	0.2	625	X027a
➤ IXFN64N50PD2**		52	0.086	7000	150	200	0.2	830	X027a
➤ IXFX80N50P		80	0.065	8000	200	200	0.12	1040	X015
➤ IXFR80N50P		45	0.07	8000	200	200	0.35	360	X016a
➤ IXFK80N50P		80	0.065	8000	200	200	0.12	1040	X020
➤ IXFN80N50P		66	0.065	12700	195	200	0.18	694	X027a
➤ IXFB100N50P		100	0.05	20000	240	200	0.1	1250	X021
➤ IXFL100N50P		70	0.055	20000	240	200	0.2	625	X022
➤ IXFN100N50P		100	0.05	20000	240	200	0.12	1040	X027a
➤ IXFP10N60P	600	10	0.74	1500	30	200	0.62	200	X005a
➤ IXFA10N60P		10	0.74	1500	30	200	0.62	200	X011b
➤ IXFP14N60P		14	0.55	2300	38	200	0.42	300	X005a
➤ IXFA14N60P		14	0.55	2300	38	200	0.42	300	X011b
➤ IXFH14N60P		14	0.55	2300	38	200	0.42	300	X014a
➤ IXFC14N60P		8	0.6	2200	40	200	1.25	100	X010a
➤ IXFV18N60P		18	0.4	3000	50	200	0.35	360	X009
➤ IXFV18N60PS		18	0.4	3000	50	200	0.35	360	X013
➤ IXFH18N60P		18	0.4	3000	50	200	0.35	360	X014a
➤ IXFV22N60P		22	0.33	3600	60	200	0.31	400	X009
➤ IXFV22N60PS		22	0.33	3600	60	200	0.31	400	X013
➤ IXFH22N60P		22	0.33	3600	60	200	0.31	400	X014a
➤ IXFC22N60P		12	0.36	3600	105	200	0.95	130	X010a
➤ IXFV26N60P		26	0.27	4000	72	200	0.27	460	X009
➤ IXFV26N60PS		26	0.27	4000	72	200	0.27	460	X013
➤ IXFH26N60P		26	0.27	4000	72	200	0.27	460	X014a
➤ IXFT26N60P		26	0.27	4000	72	200	0.27	460	X019
➤ IXFV30N60P		30	0.24	4800	82	200	0.23	540	X009
➤ IXFV30N60PS		30	0.24	4800	82	200	0.23	540	X013
➤ IXFH30N60P		30	0.24	4800	82	200	0.23	540	X014a
➤ IXFT30N60P		30	0.24	4800	82	200	0.23	540	X019
➤ IXFC30N60P		17	0.25	4800	82	200	0.8	160	X010a
➤ IXFR30N60P		17	0.25	4800	82	200	0.8	160	X016a
➤ IXFH36N60P		36	0.19	5800	102	200	0.19	650	X014a
➤ IXFT36N60P		36	0.19	5800	102	200	0.19	650	X019
➤ IXFK36N60P		36	0.19	5800	102	200	0.19	650	X020
➤ IXFR36N60P		20	0.2	5800	103	200	0.6	208	X016a
➤ IXFX48N60P		48	0.14	8860	150	200	0.15	830	X015
➤ IXFK48N60P		48	0.14	8860	150	200	0.15	830	X020
➤ IXFR48N60P		32	0.15	8860	150	200	0.42	300	X016a
➤ IXFN48N60P		40	0.14	8860	150	200	0.2	625	X027a
➤ IXFK64N60P		64	0.095	12000	200	200	0.12	1040	X020
➤ IXFN64N60P		50	0.095	12000	200	200	0.18	694	X027a
➤ IXFR64N60P		36	0.1	12000	200	200	0.35	360	X016a
➤ IXFX64N60P		64	0.095	12000	200	200	0.12	1040	X015
➤ IXFB82N60P		82	0.075	23000	240	200	0.1	1250	X021
➤ IXFL82N60P		54	0.08	23000	240	200	0.2	625	X022
➤ IXFN82N60P		82	0.075	23000	240	200	0.12	1040	X027a

Package style

Outline drawings on pages 188 - 224

X005a **TO-220AB**
Weight = 4 g

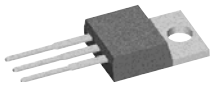

X008 **TO-262 i2-PAC**
Weight = 3 g

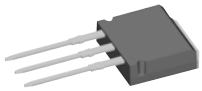

X009 **PLUS220**
Weight = 4 g

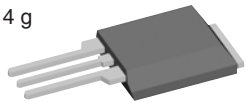

X010a **ISOPLUS220™**
Weight = 3 g

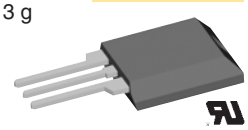

X011b **TO-263AB**
Weight = 2 g

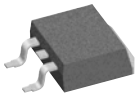

X013 **PLUS220 SMD**
Weight = 4 g

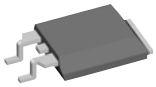

X014a **TO-247AD**
Weight = 6 g

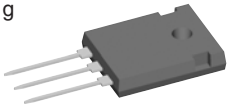

X016a **ISOPLUS247™**
Weight = 5 g

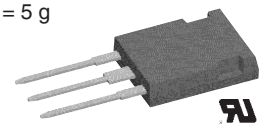

X017a **TO-3P**
Weight = 5 g

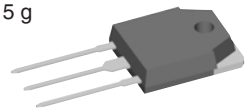

X019 **TO-268AA**
Weight = 5 g

X020 **TO-264**
Weight = 10 g

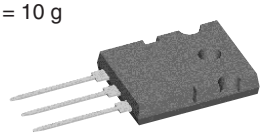

X021 **PLUS264**
Weight = 10 g

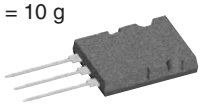

X022 **ISOPLUS264**
Weight = 10 g

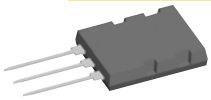

Note 1. Performance and availability are subject to change at the discretion of IXYS
Note 2. ** - MOSFET and FRED diode chips connected in“boost“ configuration.

PolarHV™ HiPerFETs with Fast Intrinsic Diodes

High Voltage Types

Part Type ➤ New	V_{DSS} max V	I_D(cont) max T_C=25°C A	$R_{DS(on)}$ max T_C=25°C Ω	C_{iss} typ pF	Q_g typ nC	t_{rr} max ns	R_{thJC} max K/W	P_D W	Fig. No
➤ IXFA7N80P	800	7	1.4	1500	30	250	0.62	200	X011b
➤ IXFI7N80P		7	1.4	1500	30	250	0.62	200	X008
➤ IXFP7N80P		7	1.4	1500	30	250	0.62	200	X005a
➤ IXFP7N80PM		4	1.5	1500	30	250	2.5	50	X007a
➤ IXFA10N80P		10	1.1	2300	40	250	0.42	300	X011b
➤ IXFC10N80P		5	1.2	2300	40	250	1.25	100	X010a
➤ IXFH10N80P		10	1.1	2300	40	250	0.42	300	X014a
➤ IXFP10N80P		10	1.1	2300	40	250	0.42	300	X005a
➤ IXFQ10N80P		10	1.1	2300	40	250	0.42	300	X017a
➤ IXFC12N80P		7	0.93	3000	50	250	1.05	120	X010a
➤ IXFH12N80P		12	0.85	3000	50	250	0.35	360	X014a
➤ IXFQ12N80P		12	0.85	3000	50	250	0.35	360	X017a
➤ IXFV12N80P		12	0.85	3000	50	250	0.35	360	X009
➤ IXFV12N80PS		12	0.85	3000	50	250	0.35	360	X013
➤ IXFC14N80P		8	0.77	3600	60	250	0.95	130	X010a
➤ IXFH14N80P		14	0.7	3600	60	250	0.31	400	X014a
➤ IXFQ14N80P		14	0.7	3600	60	250	0.31	400	X017a
➤ IXFT14N80P		14	0.7	3600	60	250	0.31	400	X019
➤ IXFV14N80P		14	0.7	3600	60	250	0.31	400	X009
➤ IXFV14N80PS		14	0.7	3600	60	250	0.31	400	X013
➤ IXFC16N80P		9	0.66	4000	70	250	0.9	138	X010a
➤ IXFH16N80P		16	0.6	4000	70	250	0.27	460	X014a
➤ IXFT16N80P		16	0.6	4000	70	250	0.27	460	X019
➤ IXFV16N80P		16	0.6	4000	70	250	0.27	460	X009
➤ IXFV16N80PS		16	0.6	4000	70	250	0.27	460	X013
➤ IXFC20N80P		10	0.55	4800	80	250	0.8	160	X010a
➤ IXFH20N80P		20	0.5	4800	80	250	0.23	540	X014a
➤ IXFR20N80P		10	0.55	4800	80	250	0.8	160	X016a
➤ IXFT20N80P		20	0.5	4800	80	250	0.23	540	X019
➤ IXFV20N80P		20	0.5	4800	80	250	0.23	540	X009
➤ IXFV20N80PS		20	0.5	4800	80	250	0.23	540	X013
➤ IXFH24N80P		24	0.4	5800	100	250	0.19	650	X014a
➤ IXFK24N80P		24	0.4	5800	100	250	0.19	650	X020
➤ IXFR24N80P		14	0.44	5800	100	250	0.6	208	X016a
➤ IXFT24N80P		24	0.4	5800	100	250	0.19	650	X019
➤ IXFK32N80P		32	0.27	8860	135	250	0.15	830	X020
➤ IXFN32N80P		29	0.27	8860	135	250	0.2	625	X027a
➤ IXFR32N80P		20	0.29	8860	135	250	0.42	300	X016a
➤ IXFX32N80P		32	0.27	8860	135	250	0.15	830	X015
➤ IXFK44N80P		44	0.19	12000	200	250	0.12	1040	X020
➤ IXFN44N80P		36	0.19	12000	200	250	0.18	694	X027a
➤ IXFR44N80P		26	0.20	12000	200	250	0.35	360	X016a
➤ IXFX44N80P		44	0.19	12000	200	250	0.12	1040	X015
➤ IXFB60N80P		60	0.14	23000	265	250	0.1	1250	X021
➤ IXFL60N80P		42	0.15	23000	265	250	0.2	625	X022
➤ IXFN60N80P		54	0.14	23000	265	250	0.12	1040	X027a

Package style

Outline drawings on pages 188 - 224

X005a — **TO-220AB**
Weight = 4 g

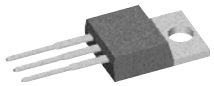

X008 — **TO-262 i2-PAC**
Weight = 5 g

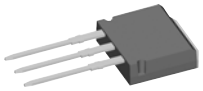

X009 — **PLUS220**
Weight = 4 g

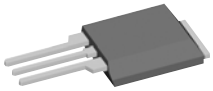

X010a — **ISOPLUS220™**
Weight = 3 g

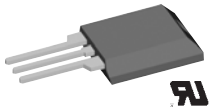

X011b — **TO-263AB**
Weight = 2 g

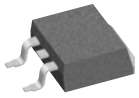

X013 — **PLUS220 SMD**
Weight = 4 g

X014a — **TO-247AD**
Weight = 6 g

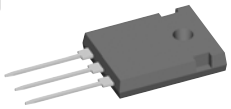

X016a — **ISOPLUS247™**
Weight = 5 g

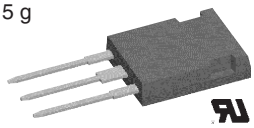

X019 — **TO-268AA**
Weight = 5 g

X020 — **TO-264**
Weight = 10 g

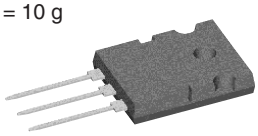

X021 — **PLUS264**
Weight = 10 g

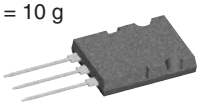

X022 — **ISOPLUS264**
Weight = 10 g

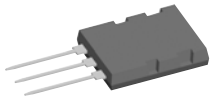

X017a — **TO-3P**
Weight = 5 g

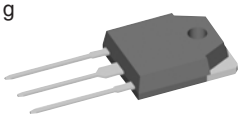

Note 1 - performance and availability are subject to change at the discretion of IXYS

HiPerFET™ Power MOSFETs with Fast Intrinsic Diode

Part Type	V_{DSS} max V	I_D(cont) max T_C=25°C A	$R_{DS(on)}$ max T_C=25°C Ω	C_{iss} typ pF	Q_g typ nC	t_{rr} max ns	R_{thJC} max K/W	P_D W	Fig. No
IXFN180N07	70	180*	0.007	9000	480	150	0.24	521	X027a
IXFK180N07		180*	0.006	9400	420	250	0.22	568	X020
IXFX180N07		180*	0.006	9400	420	250	0.22	568	X015
IXFN340N07		340*	0.004	12200	490	200	0.18	694	X027a
IXFN280N085	85	280	0.0044	16000	600	250	0.18	694	X027a
IXFX180N10	100	180*	0.008	9100	360	250	0.22	568	X015
IXFK180N10		180*	0.008	9100	360	250	0.22	568	X020
IXFN180N10		180*	0.008	9100	360	250	0.21	595	X027a
IXFN230N10		230*	0.006	21000	690	250	0.18	694	X027a
IXFH4N100Q	1000	4	3	1050	39	250	0.8	156	X014a
IXFA4N100Q		4	3	1050	39	250	0.8	156	X011b
IXFP4N100Q		4	3	1050	39	250	0.8	156	X005a
IXFT4N100Q		4	3	1050	39	250	0.8	156	X019
IXFR4N100Q		3.5	3.3	1050	39	250	1.57	80	X016a
IXFX24N100		24	0.39	7000	250	250	0.22	568	X015
IXFK24N100		24	0.39	7000	250	250	0.22	568	X020
IXFN24N100		24	0.39	7000	250	250	0.21	595	X027a
IXFN34N100		34	0.28	9200	380	250	0.18	694	X027a
IXFL34N100		30	0.3	9200	380	250	0.225	556	X022
IXFN36N100		36	0.24	9200	380	250	0.18	694	X027a
IXFP3N120	1200	3	4.5	1050	39	300	0.62	200	X005a
IXFA3N120		3	4.5	1050	39	300	0.62	200	X011b

Note 1. * - Drain and source currents may be limited by external package leads.

Q2-Class HiPerFET™ with Fast Intrinsic Diode

Very High Speed

➤ New Part Type	V_{DSS} max V	I_D(cont) max T_C=25°C A	$R_{DS(on)}$ max T_C=25°C Ω	C_{iss} typ pF	Q_g typ nC	t_{rr} max ns	R_{thJC} max K/W	P_D W	Fig. No
IXFR40N50Q2	500	29	0.17	4200	110	250	0.22	560	X016a
IXFH40N50Q2		40	0.16	4200	110	250	0.25	500	X014a
IXFR66N50Q2		50	0.085	6800	199	250	0.25	500	X016a
IXFN66N50Q2		66	0.08	6800	199	250	0.17	735	X027a
IXFK66N50Q2		66	0.08	6800	199	250	0.17	735	X020
IXFX66N50Q2		66	0.08	6800	199	250	0.17	735	X015
IXFB80N50Q2		80	0.06	10500	260	250	0.14	890	X021
IXFN80N50Q2		80	0.06	10500	260	250	0.14	890	X027a
➤ **IXFF80N50Q2**		80	0.066	10500	260	250	0.33	380	X024c
➤ **IXFL80N50Q2**		80	0.066	10500	260	250	0.33	380	X022
IXFX60N55Q2	550	60	0.088	6900	200	250	0.17	735	X015
IXFK60N55Q2		60	0.088	6900	200	250	0.17	735	X020
IXFB72N55Q2		72	0.072	10500	258	250	0.14	890	X021
IXFN72N55Q2		72	0.072	10500	258	250	0.14	890	X027a
IXFK52N60Q2	600	52	0.115	6800	198	250	0.17	735	X020
IXFX52N60Q2		52	0.115	6800	198	250	0.17	735	X015
IXFN70N60Q2		70	0.08	7200	265	250	0.14	890	X027a
IXFB70N60Q2		70	0.08	7200	265	250	0.14	890	X021
➤ **IXFR38N80Q2**	800	28	0.3	8340	190	250	0.3	416	X016a
➤ **IXFK38N80Q2**		38	0.22	8340	190	250	0.17	735	X020
➤ **IXFX38N80Q2**		38	0.22	8340	190	250	0.17	735	X015
IXFB50N80Q2		50	0.15	7200	265	250	0.14	890	X021
IXFN50N80Q2		50	0.15	7200	265	250	0.14	890	X027a
➤ **IXFR14N100Q2**	1000	9.1	1	2700	83	300	0.62	200	X016a
IXFH14N100Q2		14	0.9	2700	83	300	0.25	500	X014a
➤ **IXFK30N100Q2**		30	0.4	8200	186	300	0.17	735	X020
➤ **IXFX30N100Q2**		30	0.4	8200	186	300	0.17	735	X015
IXFN38N100Q2		38	0.25	7200	250	300	0.14	893	X027a
➤ **IXFL38N100Q2**		22	0.28	7200	250	300	0.33	380	X022
IXFB38N100Q2		38	0.25	7200	250	300	0.14	893	X021

Package style

Outline drawings on pages 188 - 224

X005a **TO-220AB**
Weight = 4 g

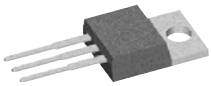

X011b **TO-263AB**
Weight = 2 g

X014a **TO-247AD**
Weight = 6 g

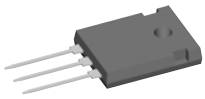

X015 **PLUS247**
Weight = 5 g

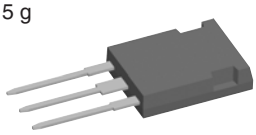

X016a **ISOPLUS247™**
Weight = 5 g

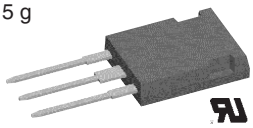

X020 **TO-264**
Weight = 10 g

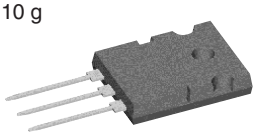

X022 **ISOPLUS264™**
Weight = 10 g

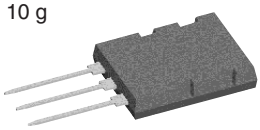

X027a **SOT-227B miniBLOC**
Weight = 30 g

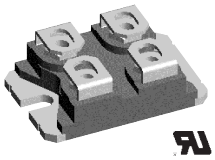

Standard N-Channel Power MOSFETs

Part Type ➤ New	V_{DSS} max V	I_D(cont) max T_C=25°C A	$R_{DS(on)}$ max T_C=25°C Ω	C_{iss} typ pF	Q_g typ nC	t_{rr} max ns	R_{thJC} max K/W	P_D W	Fig. No
IXTK250N10	100	250*	0.005	7800	390	150	0.17	730	X020
IXTY01N80	800	0.1	50	60	8	1500	3	25	X004
IXTU01N80		0.1	50	60	8	1500	3	25	X003
IXTY1N80		1	11	220	8.5	710	3.1	40	X004
IXTP1N80		1	11	220	8.5	710	3.1	40	X005a
IXTA1N80		1	11	220	8.5	710	3.1	40	X011b
IXTP2N80		2	6.2	440	22	510	2.3	54	X005a
IXTA2N80		2	6.2	440	22	510	2.3	54	X011b
IXTU01N100	1000	0.1	80	60	8	1500	3	25	X003
IXTY01N100		0.1	80	60	8	1500	3	25	X004
IXTA05N100		0.75	15	220	8.5	710	3.1	40	X011b
IXTP05N100		0.75	15	220	8.5	710	3.1	40	X005a
IXTT1N100		1.5	11	480	23	710	2.3	60	X019
IXTH1N100		1.5	11	480	23	710	2.3	60	X014a
IXTA1N100		1.5	11	480	23	710	2.3	54	X011b
IXTP1N100		1.5	11	480	23	710	2.3	54	X005a
➤ IXTP2N100		2	7	825	40	1000	1.25	100	X005a
IXTP3N120	1200	3	4.5	1050	39	700	0.62	200	X005a
IXTA3N120		3	4.5	1050	39	700	0.62	200	X011b
IXTH3N120		3	4.5	1050	39	700	0.62	200	X014a
IXTT6N120		6	2.4	1950	56	850	0.42	300	X019
IXTH6N120		6	2.4	1950	56	850	0.42	300	X014a
IXTH12N120		12	1.4	3400	95	850	0.25	500	X014a

Note 1. * - Drain and source currents may be limited by external package leads

Package style

Outline drawings on pages 188 - 224

X003 **TO-251AA**
Weight = 0.3 g

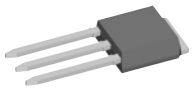

X004 **TO-252AA**
Weight = 0.3 g

X005a **TO-220AB**
Weight = 4 g

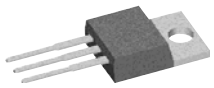

X011b **TO-263AB**
Weight = 2 g

X014a **TO-247AD**
Weight = 6 g

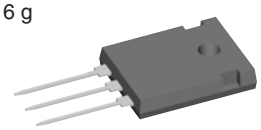

X019 **TO-268AA**
Weight = 5 g

X020 **TO-264**
Weight = 10 g

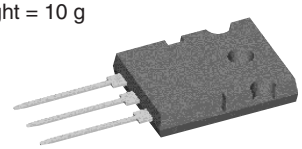

N-Channel Depletion-Mode Power MOSFETs

Normally On MOSFETs

Part Type ➤ New	V_{DSS} max V	I_D(cont) max T_C=25°C A	$R_{DS(on)}$ max V_{GS} = 0 V Ω	$V_{GS(off)}$ max V	C_{iss} typ pF	C_{rss} typ pF	R_{thJC} max K/W	P_D W	Fig. No
➤ IXTY02N50D	500	0.2	30	-5	120	5	5	25	X004
➤ IXTU02N50D		0.2	30	-5	120	5	5	25	X003
IXTP02N50D		0.2	30	-5	120	5	5	25	X005a
➤ IXTH20N50D		20	0.33	-3.5	2500	100	0.31	400	X014a
➤ IXTT20N50D		20	0.33	-3.5	2500	100	0.31	400	X019
➤ IXTY01N100D	1000	0.1	110	-5	120	3	5	25	X004
➤ IXTU01N100D		0.1	110	-5	120	3	5	25	X003
IXTP01N100D		0.1	110	-5	120	3	5	25	X005a
➤ IXTH10N100D		10	1.4	-3.5	2500	90	0.31	400	X014a
➤ IXTT10N100D		10	1.4	-3.5	2500	90	0.31	400	X019

P-Channel Power MOSFETs

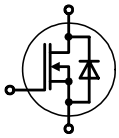

Part Type ➤ New	V_{DSS} max V	I_D(cont) max T_C=25°C A	$R_{DS(on)}$ max T_C=25°C Ω	C_{iss} typ pF	Q_g typ nC	t_{rr} typ ns	R_{thJC} max K/W	P_D W	Fig. No	Package style Outline drawings on pages 188 - 224
IXTH50P085	-85	-50	0.055	4200	150	180	0.42	300	X014a	X014a TO-247AD Weight = 6 g
IXTH36P10	-100	-36	0.075	2800	95	180	0.65	180	X014a	
IXTH50P10		-50	0.055	4200	140	180	0.42	300	X014a	
➤ IXTT50P10		-50	0.055	4200	140	180	0.42	300	X019	
IXTH16P20	-200	-16	0.16	2800	95	180	0.42	300	X014a	
IXTH24P20		-24	0.11	4200	150	250	0.42	300	X014a	
➤ IXTT24P20		-24	0.15	4500	150	250	0.42	300	X019	X019 TO-268AA Weight = 5 g
IXTH8P50	-500	-8	1.2	3400	130	400	0.65	180	X014a	
➤ IXTT8P50		-8	1.2	3400	130	400	0.65	180	X019	
IXTH11P50		-11	0.75	4700	130	500	0.42	300	X014a	
IXTT11P50		-11	0.75	4700	130	500	0.42	300	X019	
IXTH10P60	-600	-10	1	4700	160	500	0.42	300	X014a	

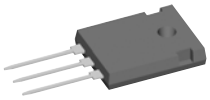

Linear Power MOSFETs

High Voltage SOA

Part Type ➤ New	V_{DSS} max V	I_D(cont) max T_C=25°C A	$R_{DS(on)}$ max T_C=25°C Ω	C_{iss} typ pF	Q_g typ nC	t_{rr} max ns	R_{thJC} max K/W	P_D W	Fig. No	Package style Outline drawings on pages 188 - 224
➤ IXTH24N50L	500	24	0.3	2500	160	500	0.31	400	X014a	X014a TO-247AD Weight = 6 g
➤ IXTN46N50L		46	0.18	7000	260	600	0.18	700	X027a	
➤ IXTK46N50L		46	0.18	7000	260	600	0.18	700	X020	
➤ IXTX46N50L		46	0.18	7000	260	600	0.18	700	X015	
➤ IXTB62N50L		62	0.1	11500	550	500	0.156	800	X021	
➤ IXTN62N50L		62	0.1	11500	550	500	0.156	800	X027a	
➤ IXTH12N100L	1000	12	1.3	2600	155	1000	0.31	400	X014a	X015 PLUS247 Weight = 5 g
➤ IXTX22N100L		24	0.6	7050	270	1000	0.18	700	X015	
➤ IXTK22N100L		24	0.6	7050	270	1000	0.18	700	X020	
➤ IXTN22N100L		24	0.6	7050	270	1000	0.18	700	X027a	
➤ IXTB30N100L		30	0.45	11400	530	1000	0.156	800	X021	
➤ IXTN30N100L		30	0.45	11400	530	1000	0.156	800	X027a	X020 TO-264 Weight = 10 g X021 PLUS264 Weight = 10 g X027a SOT-227B miniBLOC Weight = 30 g

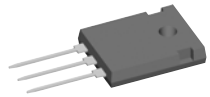

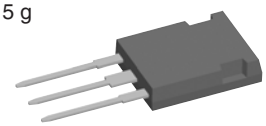

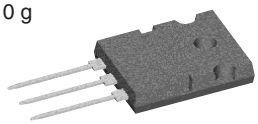

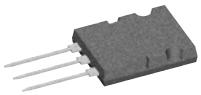

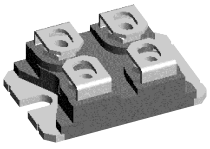

CoolMOS™ Power MOSFETs

CoolMOS™ is a trademark of Infineon Technologies

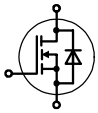

Outline drawings on page 188 - 224

K Series - CoolMOS™

Type ➤ New	V_{DSS} V	$I_{D(cont)}$ $T_C = 25°C$ A	$R_{DS(on)}$ max. $T_J = 25°C$ Ω	Q_G typ. nC	R_{thJC} max. K/W	V_{isol} RMS V	Fig. No.
IXKC20N60C	600	14	0.190	80	1.00	2500	X010a
IXKC40N60C		24	0.096	160	0.50	2500	X010a
➤ IXKP35N60C5		35	0.100	60	0.35	-	X005a
➤ IXKH35N60C5		35	0.100	60	0.35	-	X014a
IXKR40N60C		38	0.070	250	0.45	2500	X016a
IXKN40N60C		40	0.070	250	0.43	2500	X027a
IXKH47N60C		47	0.070	250	0.30	-	X014a
➤ IXKH70N60C5		70	0.045	150	0.20	-	X014a
IXKN75N60C		75	0.036	500	0.22	2500	X027a
IXKK85N60C		85*	0.036	540	0.18	-	X020
IXKC13N80C	800	13	0.290	85	0.96	2500	X010a
IXKC25N80C		20	0.150	180	0.90	2500	X010a
IXKR25N80C		25	0.150	170	0.50	2500	X016a
IXKN45N80C		44	0.074	335	0.33	2500	X027a

Notes: * Silicon chip current rating.

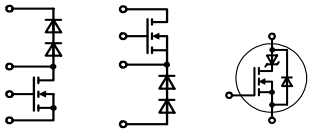

CoolMOS™ configurations in i4-package

Type ➤ New	V_{DSS} V	$I_{D(cont)}$ $T_C = 25°C$ A	R_{DSon} max. $T_J = 25°C$ Ω	Q_G typ. nC	R_{thJC} max. K/W	Config.	Fig. No
IXKF40N60SCD1	600	38	0.070	250	0.45	single	X024c
➤ FMD25-06KC5		25	0.100	under development		boost	X024a
➤ FMD25-06KC5SiC		25	0.100			boost, SiC	X024a
FMD40-06KC		38	0.070	250	0.45	boost	X024a
➤ FMD40-06KC5		47	0.045			boost	X024a
➤ FDM25-06KC5		25	0.100	under development		buck	X024a
➤ FDM25-06KC5SiC		25	0.100			buck, SiC	X024a
➤ FDM40-06KC5		47	0.045			buck	X024a

Trench Gate Power MOSFETs

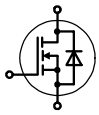

U Series

Type ➤ New	V_{DSS} Max. V	$I_{D(cont)}$ $T_C = 25°C$ A	$R_{DS(on)typ}$ $T_C = 25°C$ mΩ	$Q_{G(on)}$ typ nC	t_{rr} typ. ns	P_D W	Fig. No
IXUC100N055	55	100 *	6.1	100	80	150	X010a
IXUC200N055		200 *	4.0	200	80	250	X010a
IXUC160N075	75	160 *	5.3	250	120	250	X010a
IXUV170N075		175 *	5.3	250	120	310	X009
IXUV170N075S		175 *	5.3	250	120	310	X013
IXUC60N10	100	60 *	12.8	110	80	150	X010a
IXUC120N10		120 *	7.3	220	80	300	X010a
➤ IXUN280N10		280 *	3.9	440	80	770	X027a
➤ IXUN350N10		350 *	1.9	640	100	965	X027a

Notes: * Drain and source currents may be limited by external package leads

More Trench Gate MOSFETs are shown in the MOSFET Modules table and the table on the following page.

X005a **TO-220AB**
Weight = 4 g

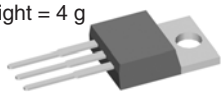

X009 **PLUS220™**
Weight = 4 g

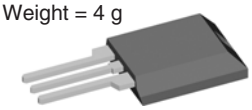

X010a **ISOPLUS220™**
Weight = 3 g

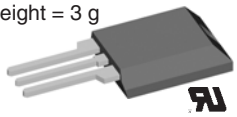

X013 **PLUS220 SMD**
Weight = 4 g

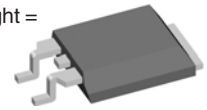

X014a **TO-247AD**
Weight = 6 g

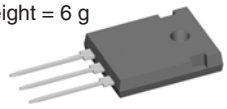

X016a **ISOPLUS247™**
Weight = 5 g

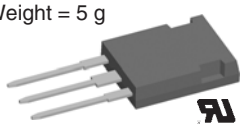

X020 **TO-264**
Weight = 10 g

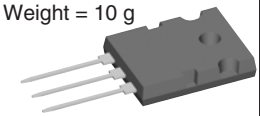

X024a **ISOPLUS i4-PAC™**
Weight = 6 g

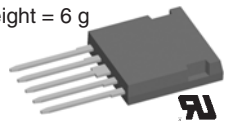

X024c **ISOPLUS i4-PAC™**
Weight = 6 g

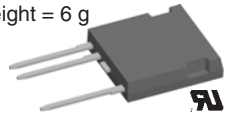

X027a **SOT-227B**
Weight = 30 g **miniBLOC**

Trench Gate Power MOSFETs

Very Low $R_{DS(on)}$

Part Type ➤ New	V_{DSS} max V	I_D(cont) max T_C=25°C A	$R_{DS(on)}$ max T_C=25°C Ω	C_{iss} typ pF	Q_g typ nC	t_{rr} max ns	R_{thJC} max K/W	P_D W	Fig. No
➤ IXTP64N055T	55	64	0.013	1700	60	80	1.25	120	X005a
➤ IXTU64N055T		64*	0.013	1700	60	80	1.25	120	X003
➤ IXTY64N055T		64*	0.013	1700	60	80	1.25	120	X004
➤ IXTP90N055T		90*	0.008	2600	64	80	1.00	150	X005a
➤ IXTU90N055T		90*	0.008	2600	64	80	1.00	150	X003
➤ IXTY90N055T		90*	0.008	2600	64	80	1.00	150	X004
➤ IXTA110N055T		110*	0.0067	3100	80	80	0.75	200	X011b
➤ IXTA110N055T7		110*	0.0067	3100	80	80	0.75	200	X012b
➤ IXTP110N055T		110*	0.0067	3100	80	80	0.75	200	X005a
➤ IXTA182N055T		182*	0.0044	4850	115	80	0.42	350	X011b
➤ IXTA182N055T7		182*	0.0044	4850	115	80	0.42	350	X012b
➤ IXTP182N055T		182*	0.0044	4850	115	80	0.42	350	X005a
➤ IXTQ182N055T		182*	0.0044	4850	115	80	0.42	350	X017a
➤ IXTA220N055T		220*	0.0036	5800	175	80	0.37	400	X011b
➤ IXTA220N055T7		220*	0.0036	5800	175	80	0.37	400	X012b
➤ IXTP220N055T		220*	0.0036	5800	175	80	0.37	400	X005a
➤ IXTQ220N055T		220*	0.0036	5800	175	80	0.37	400	X017a
➤ IXTA240N055T		240*	0.0033	6900	190	80	0.33	450	X011b
➤ IXTA240N055T7		240*	0.0033	6900	190	80	0.33	450	X012b
➤ IXTC240N055T		140*	0.0036	6900	190	80	1.00	150	X010a
➤ IXTQ240N055T		240*	0.0033	6900	190	80	0.33	450	X017a
➤ IXTP240N055T		240*	0.0033	6900	190	80	0.33	450	X005a
➤ IXTC280N055T		164*	0.0030	7900	240	80	0.85	175	X010a
➤ IXTH280N055T		280*	0.0028	7900	240	80	0.30	500	X014a
➤ IXTQ280N055T		280*	0.0028	7900	240	80	0.30	500	X017a
➤ IXTV280N055T		280*	0.0028	7900	240	80	0.30	500	X009
➤ IXTV280N055TS		280*	0.0028	7900	240	80	0.30	500	X013
➤ IXTP55N075T	75	55	0.0017	2100	35	100	1.25	120	X005a
➤ IXTU55N075T		55*	0.0017	2100	35	100	1.25	120	X003
➤ IXTY55N075T		55*	0.0017	2100	35	100	1.25	120	X004
➤ IXTP76N075T		76*	0.0011	2600	64	100	1.00	150	X005a
➤ IXTU76N075T		76*	0.0011	2600	64	100	1.00	150	X003
➤ IXTY76N075T		76*	0.0011	2600	64	100	1.00	150	X004
➤ IXTA98N075T		98*	0.009	3100	80	100	0.75	200	X011b
➤ IXTA98N075T7		98*	0.009	3100	80	100	0.75	200	X012b
➤ IXTP98N075T		98*	0.009	3100	80	100	0.75	200	X005a
➤ IXTA160N075T		160*	0.0055	4850	130	100	0.42	350	X011b
➤ IXTA160N075T7		160*	0.0055	4850	130	100	0.42	350	X012b
➤ IXTP160N075T		160*	0.0055	4850	130	100	0.42	350	X005a
➤ IXTQ160N075T		160*	0.0055	4850	130	100	0.42	350	X017a
➤ IXTA200N075T		200*	0.0044	5450	139	100	0.37	400	X011b
➤ IXTA200N075T7		200*	0.0044	5450	139	100	0.37	400	X012b
➤ IXTP200N075T		200*	0.0044	5450	139	100	0.37	400	X005a
➤ IXTQ200N075T		200*	0.0044	5450	139	100	0.37	400	X017a
➤ IXTA220N075T		220*	0.004	6900	190	100	0.33	450	X011b
➤ IXTA220N075T7		220*	0.004	6900	190	100	0.33	450	X012b
➤ IXTC220N075T		125*	0.0044	6900	190	100	1.00	150	X010a
➤ IXTQ220N075T		220*	0.004	6900	190	100	0.33	450	X017a
➤ IXTP220N075T		220*	0.004	6900	190	100	0.33	450	X005a
➤ IXTC250N075T		150*	0.0037	7900	240	100	0.85	175	X010a
➤ IXTH250N075T		250*	0.0034	7900	240	100	0.30	500	X014a
➤ IXTQ250N075T		250*	0.0034	7900	240	100	0.30	500	X017a
➤ IXTV250N075T		250*	0.0034	7900	240	100	0.30	500	X009
➤ IXTV250N075TS		250*	0.0034	7900	240	100	0.30	500	X013
➤ IXTP50N085T	85	50	0.02	2100	35	110	1.25	120	X005a
➤ IXTU50N085T		50*	0.02	2100	35	110	1.25	120	X003
➤ IXTY50N085T		50*	0.02	2100	35	110	1.25	120	X004
➤ IXTP70N085T		70	0.013	2600	64	110	1.00	150	X005a
➤ IXTU70N085T		70*	0.013	2600	64	110	1.00	150	X003
➤ IXTY70N085T		70*	0.013	2600	64	110	1.00	150	X004
➤ IXTA88N085T		88*	0.011	3100	80	110	0.75	200	X011b
➤ IXTA88N085T7		88*	0.011	3100	80	110	0.75	200	X012b

Note 1. Performance and availability are subject to change at IXYS' discretion.
Note 2. * - Drain and source currents may be limited by external package leads.

Package style

Outline drawings on pages 188 - 224

X005a **TO-220AB**
Weight = 4 g

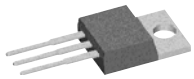

X008 **TO-262 i2-PAC**
Weight = 3 g

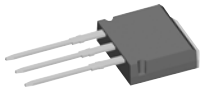

X009 **PLUS220**
Weight = 4 g

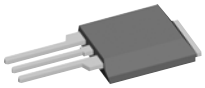

X010a **ISOPLUS220™**
Weight = 3 g

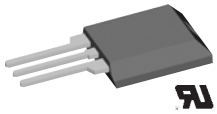

X011b **TO-263AB**
Weight = 2 g

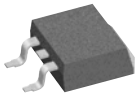

X013 **PLUS220 SMD**
Weight = 4 g

X014a **TO-247AD**
Weight = 6 g

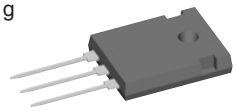

X016a **ISOPLUS247™**
Weight = 5 g

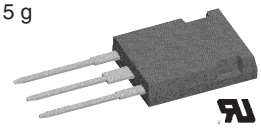

X017a **TO-3P**
Weight = 5 g

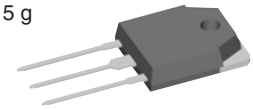

X019 **TO-268AA**
Weight = 5 g

X020 **TO-264**
Weight = 10 g

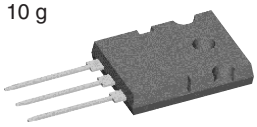

Trench Gate Power MOSFETs

Very Low $R_{DS(on)}$

Part Type ➤ New	V_{DSS} max V	I_D(cont) max T_C=25°C A	$R_{DS(on)}$ max T_C=25°C Ω	C_{iss} typ pF	Q_g typ nC	t_{rr} max ns	R_{thJC} max K/W	P_D W	Fig. No
➤ IXTP88N085T	85	88*	0.011	3100	80	110	0.75	200	X005a
➤ IXTA152N085T		152*	0.0066	4850	130	110	0.42	350	X011b
➤ IXTA152N085T7		152*	0.0066	4850	130	110	0.42	350	X012b
➤ IXTP152N085T		152*	0.0066	4850	130	110	0.42	350	X005a
➤ IXTQ152N085T		152*	0.0066	4850	130	110	0.42	350	X017a
➤ IXTA180N085T		180*	0.0055	6500	175	110	0.37	400	X011b
➤ IXTA180N085T7		180*	0.0055	6500	175	110	0.37	400	X012b
➤ IXTP180N085T		180*	0.0055	6500	175	110	0.37	400	X005a
➤ IXTQ180N085T		180*	0.0055	6500	175	110	0.37	400	X017a
➤ IXTA200N085T		200*	0.005	6900	190	110	0.33	450	X011b
➤ IXTA200N085T7		200*	0.005	6900	190	110	0.33	450	X012b
➤ IXTC200N085T		110*	0.0055	6900	190	110	1.00	150	X010a
➤ IXTQ200N085T		200*	0.005	6900	190	110	0.33	450	X017a
➤ IXTP200N085T		200*	0.005	6900	190	110	0.33	450	X005a
➤ IXTC230N085T		136*	0.0045	7900	240	110	0.85	175	X010a
➤ IXTH230N085T		230*	0.0041	7900	240	110	0.30	500	X014a
➤ IXTQ230N085T		230*	0.0041	7900	240	110	0.30	500	X017a
➤ IXTV230N085T		230*	0.0041	7900	240	110	0.30	500	X009
➤ IXTV230N85TS		230*	0.0041	7900	240	110	0.30	500	X013
➤ IXTP44N10T	100	44	0.025	1800	32	130	1.25	120	X005a
➤ IXTU44N10T		44*	0.025	1800	32	130	1.25	120	X003
➤ IXTY44N10T		44*	0.025	1800	32	130	1.25	120	X004
➤ IXTP60N10T		60	0.018	2200	58	130	1.00	150	X005a
➤ IXTU60N10T		60*	0.018	2200	58	130	1.00	150	X003
➤ IXTY60N10T		60*	0.018	2200	58	130	1.00	150	X004
➤ IXTA80N10T		80*	0.013	2600	72	130	0.75	200	X011b
➤ IXTA80N10T7		80*	0.013	2600	72	130	0.75	200	X012b
➤ IXTP80N10T		80*	0.013	2600	72	130	0.75	200	X005a
➤ IXTA130N10T		130*	0.0085	4100	115	130	0.42	350	X011b
➤ IXTA130N10T7		130*	0.0085	4100	115	130	0.42	350	X012b
➤ IXTP130N10T		130*	0.0085	4100	115	130	0.42	350	X005a
➤ IXTQ130N10T		130*	0.0085	4100	115	130	0.42	350	X017a
➤ IXTA160N10T		160*	0.0069	5800	155	130	0.37	400	X011b
➤ IXTA160N10T7		160*	0.0069	5800	155	130	0.37	400	X012b
➤ IXTP160N10T		160*	0.0069	5800	155	130	0.37	400	X005a
➤ IXTQ160N10T		160*	0.0069	5800	155	130	0.37	400	X017a
➤ IXTA180N10T		180*	0.0061	6200	170	130	0.33	450	X011b
➤ IXTA180N10T7		180*	0.0061	6200	170	130	0.33	450	X012b
➤ IXTC180N10T		100*	0.0067	6200	170	130	1.00	150	X010a
➤ IXTQ180N10T		180*	0.0061	6200	170	130	0.33	450	X017a
➤ IXTP180N10T		180*	0.0061	6200	170	130	0.33	450	X005a
➤ IXTC200N10T		118*	0.0059	7200	220	130	0.85	175	X010a
➤ IXTH200N10T		200*	0.0054	7200	220	130	0.30	500	X014a
➤ IXTQ200N10T		200*	0.0054	7200	220	130	0.30	500	X017a
➤ IXTV200N10T		200*	0.0054	7200	220	130	0.30	500	X009
➤ IXTV200N10TS		200*	0.0054	7200	220	130	0.30	500	X013

Note 1. Performance and availability are subject to change at IXYS' discretion.
Note 2. * - Drain and source currents may be limited by external package leads.

Package style

Outline drawings on pages 188 - 224

X003 **TO-251AA**
Weight = 0.3 g

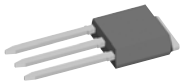

X004 **TO-252AA**
Weight = 0.3 g

X005a **TO-220AB**
Weight = 4 g

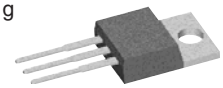

X008 **TO-262 i2-PAC**
Weight = 3 g

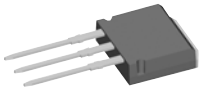

X009 **PLUS220**
Weight = 4 g

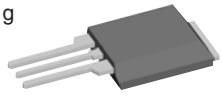

X010a **ISOPLUS220™**
Weight = 3 g

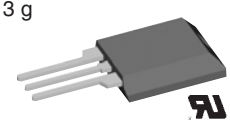

X011b **TO-263AB**
Weight = 2 g

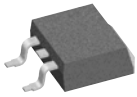

X012b **TO-263(7)**
Weight = 2 g

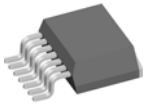

X013 **PLUS220 SMD**
Weight = 4 g

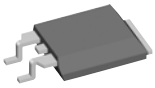

X014a **TO-247AD**
Weight = 6 g

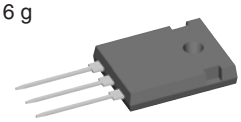

X016a **ISOPLUS247™**
Weight = 5 g

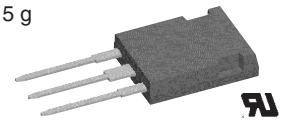

X017a **TO-3P**
Weight = 5 g

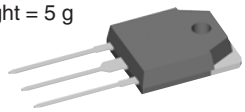

X019 **TO-268AA**
Weight = 5 g

X020 **TO-264**
Weight = 10 g

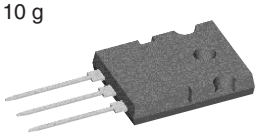

MOSFET Modules

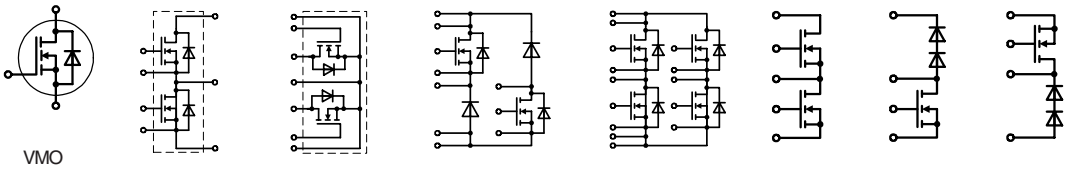

VMO single switch | VMM phase leg | VMK / FMK dual switch | VHM H-bridge | VKM H-bridge | FMM phase leg | FMD boost | FDM buck

N Channel Enhancement Types

suffix "F" = HiPerFET™ technology with fast intrinsic diode

Type ➤ New	V_{DSS} V	I_{D25} A T_C = 25°C	I_{D80} A T_C = 80°C	R_{DSon} mΩ T_J = 25°C	t_f ns	t_r ns	R_{thJC} K/W	Thermistor	Fig. No.
single switch modules									
VMO150-01P1	100	150	110	8	65	90	0.3		X102
VMO550-01F	100	590	*not recommended for new designs*						X128
VMO650-01F	100	690	*not recommended for new designs*						X128
➤ **VMO1200-01F**	100	1245	930	1.35	200	500	0.039		X130d
VMO580-02F	200	580	*not recommended for new designs*						X130d
VMO40-05P1	500	41	31	100	45	60	0.3		X102
VMO60-05F	500	60	*not recommended for new designs*						X125b
VMO80-05P1	500	82	62	50	45	60	0.16		X102
dual switch modules - common source configuration									
VMK165-007T	70	165	*not recommended for new designs*						X125b
FMK75-01F	100	75	50 / 90°C	21	60	60	0.50		X024a
VMK90-02T2	200	84	*not recommended for new designs*						X125b
MOSFET modules - phase leg configuration									
FMM75-01F	100	75	50 / 90°C	21	60	60	0.50		X024a
VMM650-01F	100	680	*not recommended for new designs*					•	X130b
VMM45-02F	200	45							X125b
VMM85-02F	200	84							X127a
VMM300-03F	300	290						•	X128
VMM90-09F	900	85	65	76	140	180	0.08		X130b
MOSFET modules - H bridge configuration									
VHM40-06P1	600	38	25 / 90°C	70	10	95	0.45	•	X102
VKM60-01P1	100	75	60	25	60	60	0.5		
VKM40-06P1*	600	38	25	70	10	95	0.45		
MOSFET modules - boost configuration									
FMD21-05QC	500	21	15 / 90°C	180	16	30	1.50		X024a
FMD40-06KC *	600	38	25 / 90°C	60	10	30	0.45		X024a
➤ **FMD25-06KC5 ***	600	25	tbd	100					X024a
➤ **FMD25-06KC5SiC ***	600	25		100	***under development***				X024a
➤ **FMD40-06KC5 ***	600	47		45					X024a
MOSFET modules - buck configuration									
FDM21-05QC	500	21	15 / 90°C	180	16	30	0.50		X024a
➤ **FDM25-06KC5 ***	600	25	tbd	100					X024a
➤ **FDM25-06KC5SiC ***	600	25		100	***under development***				X024a
➤ **FDM40-06KC5 ***	600	47		45					X024a

Package style

Outline drawings on page 188 - 224

X102 **ECO-PAC 2**
Weight = 24 g

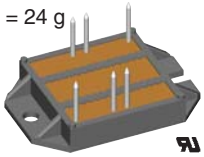

See data sheet for pin arrangement

X125b **TO-240 AA**
Weight = 90 g

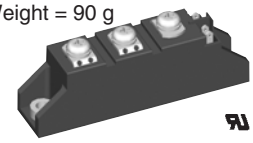

X127a
Weight 150 g

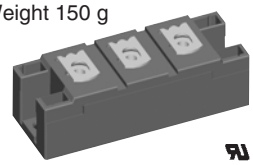

X128
Weight = 250 g

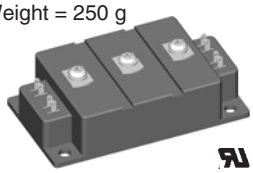

X130b
Weight = 250 g

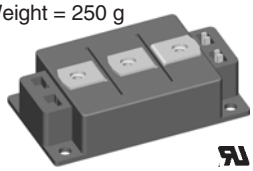

X130d
Weight = 250 g

X024a **ISOPLUS i4-PAC™**
Weight = 6 g

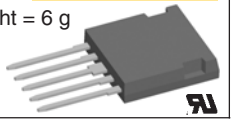

* COOLMOS Power Semiconductors

CoolMOS™ is a trademark of Infineon Technologies

MOSFET Modules

Trench MOSFET Technology

- very low R_{DSon}
- fast body diode

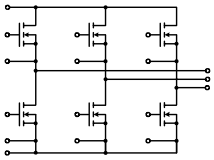

GWM, VWM
sixpack

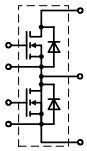

VMM
phase leg

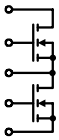

FMM
phase leg

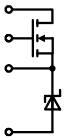

FDM
buck

Type ➤ New	V_{DSS} V T_C =	I_{D25} A T_C = 25°C	I_{D80} A T_J = 90°C	R_{DSon} mΩ 25°C	t_f ns	t_r ns	R_{thJC} K/W	Fig. No.
Phase leg configuration								
FMM300-0055P	55	300	220	2.7	40	50	0.50	X024a
FMM150-0075P	75	150	120	4.7	60	60	0.60	X024a
FMM200-0075P	75	200	160	3.5	1170	1020	0.55	X024a
VMM1500-0075P	75	1500	1200 / 80°C	0.55	200	170	0.06	X130b
VMM1000-01P	100	1000	800 / 80°C	0.75	100	100	0.06	X130b
FMM65-015P	150	65	50	13	100	80	0.60	X024a
Sixpack configuration								
VWM350-0075P	75	340	250 / 80°C	2.3	200	170	0.26	X104
VWM200-01P	100	210	170 / 80°C	3.6	100	100	0,26	X104
GWM220-004P3*	40	220	160	2.8	190	270	0,85	X026
GWM160-0055P3*	55	160	120	3	50	40	0.85	X026
GWM120-0075P3*	75	125	100	4.8	50	60	0,85	X026
➤ **GWM100-0085X1***	85		***under development***					X026
GWM70-01P2*	100	70	50 / 80°C	11	70	85	0.85	X026
➤ **GWM95-01X1***	100		***under development***					X026
Buck configuration								
FDM100-0045SP	45	100	80	5.7	155	115	1.0	X024a
Boost configuration								
FMD80-0045SP	100	70	50	11	70	55	0.85	X024a

Package style

Outline drawings on page 188 - 224

X024a
Weight = 6 g

ISOPLUS i4-PAC™

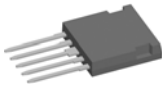

X026
Weight = 25 g

ISOPLUS-DIL™

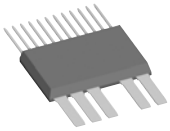

X104
Weight = 80 g

See data sheet for pin arrangement

X130b
Weight = 250 g

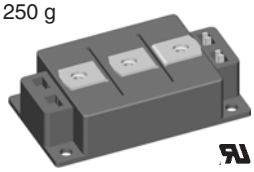

* Bent lead and SMD lead version available, refer to ISOPLUS-DIL pages 59/60

Gallium Arsenide Schottky Diodes

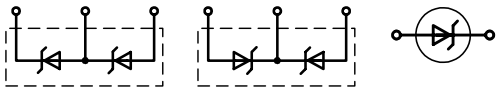

No reverse recovery

Type ➤ New	V_{RRM} V	I_{DC} @ T_C A °C	V_F typ. @ I_F T_{VJ} = 125 °C V A	C_J pF	R_{thJC} K/W	Fig. No.
DGS 3-018AS	180	5 90	0.85 2	8.8	8.5	X004
DGS 10-018A DGS 10-018AS	180 180	11 90 11 90	0.8 5 0.8 5	22 22	4.4 4.4	X005b X011b
DGS 20-018A DGS 20-018AS	180 180	17 90 17 90	0.8 7.5 0.8 7.5	33 33	3.1 3.1	X005b X011b
DGS 3-025AS	250	3.9 90	1.3 2	6.4	8.5	X004
DGS 4-025A	250	9 90	1.3 2	6.4	8.5	X005b
DGS 9-025AS	250	9 90	1.3 5	18	4.4	X004
DGS 10-025A DGS 10-025AS	250 250	9 90 9 90	1.3 5 1.3 5	18 18	4.4 4.4	X005b X011b
DGS 19-025AS	250	13 90	1.3 7.5	26	3.1	X004
DGS 20-025A DGS 20-025AS	250 250	13 90 13 90	1.3 7.5 1.3 7.5	26 26	3.1 3.1	X005b X011b
DGS 3-030AS	300	3.5 90	1.6 2	3.7	8.5	X004
DGS 9-030AS	300	8 90	1.6 5	9	4.4	X004
DGS 10-030A	300	8 90	1.6 5	9	4.4	X005b
DGSK 20-018A	180	11 90	0.8 5	22	4.4	X005a
DGSK 40-018A	180	17 90	0.8 7.5	33	3.1	X005a
DGSK 8-025A	250	3.9 90	1.3 2	6.4	8.5	X005a
DGSK 20-025A DGSK 20-025AS	250 250	9 90 9 90	1.3 5 1.3 5	18 18	4.4 4.4	X005a X011b
DGSK 40-025A DGSK 40-025AS	250 250	13 90 13 90	1.3 7.5 1.3 7.5	26 26	3.1 3.1	X005a X011b

Package style

Outline drawings on page 188 - 224

X004 **TO-252AA**
Weight = 0.3 g

X005a **TO-220AB**
Weight = 2 g

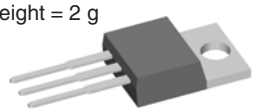

X005b **TO-220 AC**
Weight = 2 g

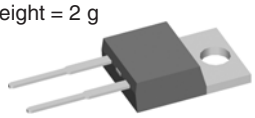

Low leakage current

Second generation

Type ➤ New	V_{RRM} V	I_{DC} @ T_C A °C	V_F typ. @ I_F T_{VJ} = 125 °C V A	C_J pF	R_{thJC} K/W	Fig. No.
DGS 15-018CS	180	15 90	1.0 7.5	21	4.4	X004
DGS 13-025CS DGS 19-025CS	250	14 90 20 90	1.2 7.5 1.1 10	15 24	4.4 3.1	
DGS 17-03CS	300	17.5 90	1.1 7.5	10.7	4.4	
DGSK 32-018CS	180	15 90	1.0 7.5	21	4.4	X011b
DGSK 28-025CS DGSK 40-025CS	250	14 90 20 90	1.2 7.5 1.1 10	15 24	4.4 3.1	
DGSK 36-03CS	300	17.5 90	1.1 7.5	10.7	4.4	
➤ DGSS 6-06CC DGSS 10-06CC ➤ DGSS 20-06CC	600 600 600	6 90 15 90 23 90	1.2 6 1.2 10 1.2 20	4 10.7 16	12.5 5.2 3.5	X010a

X010a **ISOPLUS220AB™**
Weight = 2 g

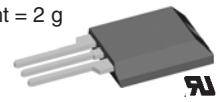

X011b **TO-263AB**
Weight = 2 g

Silicon Carbide Schottky Diodes

No reverse recovery

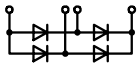

Type ➤ New	V_{RRM} V	I_{DC} @ T_C A °C	V_F typ. @ I_F T_{VJ} = 25...125 °C V A	C_J pF	R_{thJC} K/W	Fig. No.
FBS 10-06SC FBS 16-06SC	600 600	3 90 5 90	1.7 4 1.5 6	9	8 5.6	X024a

X024a **ISOPLUS i4-PAC™**
Weight = 6 g

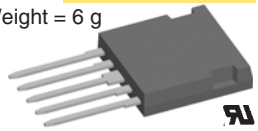

Data according to IEC 60747 and refer to a single diode or thyristor unless otherwise stated.

Schottky Diodes

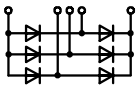
FUS..

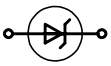
DSS..

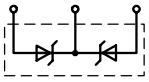
DSSK...

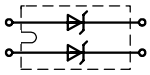
DSS 2x..

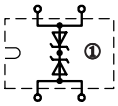
DSS 2x..

Type ➤ New	V_{RRM} V	I_{FAV} d = 0.5 A	T_C °C	V_F @ I_F max. T_{VJM} = 125°C V	A	E_{AS} mJ	I_{AR} A	T_{VJM} °C	R_{thJC} K/W	Fig. No.	Package style Outline drawings on page 188 - 224
➤ **DSS 40-0008D**	8	40	135	0.23	40	80	4	150	0.8	X014a	X004 **TO-252AA** Weight = 0.3 g
DSSK 80-0008D		2x40	135	0.23	40	80	4	150	0.8	X014a	
DSS 2x200-0008D ①		2x200	100	0.15	100	80	4	150	0.4	X027b	
DSS 20-0015B	15	20	135	0.33	20	tbd	tbd	150	1.4	X005b	
DSSK 40-0015B		2x20	135	0.32	20	tbd	tbd	150	1.4	X014a	
DSSK 70-0015B		2x35	130	0.33	35	61	2.5	150	1.1	X014a	
DSS 6-0025BS	25	6	140	0,30	6	tbd	tbd	150	3.0	X004	X005a **TO-220AB** Weight = 2 g
DSS 25-0025B		25	125	0.44	25	tbd	tbd	150	1.4	X005b	
DSSK 18-0025B		2x10	140	0.37	10	tbd	tbd	150	1.7	X005a	
DSSK 18-0025BS		2x10	140	0.37	10	tbd	tbd	150	1.7	X011b	
DSSK 38-0025B		2x20	130	0.40	20	tbd	tbd	150	1.4	X005a	
DSSK 38-0025BS		2x20	130	0.40	20	tbd	tbd	150	1.4	X011b	X005b **TO-220 AC** Weight = 2 g
DSSK 48-0025B		2x25	130	0.35	20	tbd	tbd	150	1.2	X005a	
DSSK 50-0025B		2x25	125	0.42	25	tbd	tbd	150	1.4	X014a	
DSSK 80-0025B		2x40	130	0.39	40	10	6.0	150	0.8	X014a	
DSSK 48-003B	30	2x25	130	0.35	20	tbd	tbd	150	1.2	X005a	
DSSK 48-003BS		2x25	130	0.35	20	tbd	tbd	150	1.2	X011b	
DSSK 70-003B		2x35	125	0.39	35	tbd	tbd	150	1.1	X014a	X007a **TO-220ABFP** Weight = 2 g
DSSK 80-003B		2x40	130	0.39	40	10	6.0	150	0.8	X014a	
DSS 6-0045AS	45	6	165	0.50	6	24	1.3	175	3.0	X004	
DSS 10-0045A		10	160	0.56	10	24	1.3	175	1.7	X005b	
DSS 10-0045B		10	135	0.46	10	24	1.3	150	1.7	X005b	
DSS 16-0045A		16	160	0.56	16	32	1.5	175	1.4	X005b	X011b **TO-263AB** Weight = 2 g
DSS 16-0045AS		16	160	0.56	16	32	1.5	175	1.4	X011b	
DSS 16-0045B		16	130	0.44	16	32	1.5	150	1.4	X005b	
DSS 25-0045A		25	155	0.56	25	46	1.8	175	1.1	X005b	
DSS 60-0045B		60	100	0.57	60	57	2.0	150	0.8	X014b	
DSSK 20-0045A		2x10	160	0.58	10	24	1.3	175	1.7	X005a	
DSSK 20-0045AM		2x10	145	0.56	10	11	1.5	175	4.3	X007a	
DSSK 20-0045B		2x10	135	0.45	10	24	1.3	150	1.7	X005a	X014a **TO-247 AD** Weight = 6 g
DSSK 28-0045A		2x14	160	0.57	15	32	1.5	175	1.4	X005a	
DSSK 28-0045B		2x15	135	0.43	15	32	1.5	150	1.4	X005a	
DSSK 28-0045BS		2x15	135	0.43	15	32	1.5	150	1.4	X011b	
DSSK 30-0045A		2x15	160	0.57	15	32	1.5	175	1.4	X014a	
DSSK 30-0045B		2x15	135	0.41	15	32	1.5	150	1.4	X014a	
DSSK 60-0045A		2x30	150	0.60	30	46	1.8	175	1.1	X014a	
DSSK 60-0045B		2x30	120	0.44	30	46	1.8	150	1.1	X014a	X014b **TO-247 AD** Weight = 6 g
DSSK 80-0045B		2x40	125	0.45	40	57	2.0	150	0.8	X014a	
DSS 2x61-0045A		2x60	105	0.65	60	57	2.0	150	0.8	X027a	
DSS 2x81-0045B		2x80	75	0.64	80	57	2.0	150	0.8	X027a	
DSS 2x121-0045B		2x120	100	0.59	120	112	2.8	150	0.4	X027a	
DSS 2x160-0045A①		2x160	100	0.73	160	112	2.8	150	0.3	X027b	
FUS 45-0045B		45	90	0.5 typ.	15	tbd	tbd	150	3.1	X024a	X016a **ISOPLUS247™** Weight = 5 g
DSS 10-006A	60	10	160	0.62	10	0.05	0.1	175	1.6	X005b	
DSSK 28-006B		2x15	135	0.52	15	5	1	150	1.4	X005a	
DSSK 28-006BS		2x15	135	0.52	15	5	1	150	1.4	X011b	
DSSK 40-006B		2x20	130	0.46	20	20	2	150	1.1	X014a	
DSSK 80-006B		2x40	120	0.51	40	20	2	150	0.8	X014a	
➤ **DSSK 80-006BR**		2x40	120	0.51	40	20	2	150	0.8	X016a	X024a **ISOPLUS i4-PAC™** Weight = 6 g

Data per Diode unless otherwise specified
① non isolated base plate

X027a/b **SOT-227B** **miniBLOC** Weight = 30 g

Data according to IEC 60747 and refer to a single diode or thyristor unless otherwise stated.

Schottky Diodes

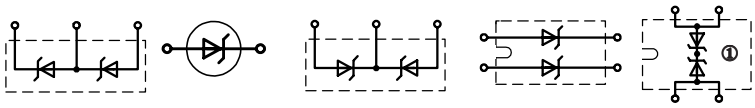

FSS..., DSSS... | DSS.. | DSSK... | DSS 2x.. | DSS 2x..

Type ➤ New	V_{RRM} V	I_{FAV} @ T_C d = 0.5 A	°C	V_F @ I_F max. T_{VJM} = 125°C V	A	E_{AS} mJ	I_{AR} A	T_{VJM} °C	R_{thJC} K/W	Fig. No.	Package style Outline drawings on page 188 - 224
DSSK 40-008B	80	2x20	130	0.52	20	20	2	150	1.1	X014a	X004 TO-252AA Weight = 0.3 g
➤ DSSS 35-008AR		35	150	0.68	35	60	2	175	0.8	X016a	
DSSK 70-008A		2x35	150	0.64	35	tbd	tbd	175	0.8	X014a	
➤ DSSK 70-008AR		2x35	150	0.64	35	61	3.5	175	0.8	X016a	
DSS 2x111-008A		2x110	105	0.72	100	19	1.4	150	0.4	X027a	
FSS 100-008A		85	90	0.80	75	tbd	tbd	175	1.4	X024b	
DSS 10-01A		10	160	0.66	10	1.3	0.8	175	1.7	X005b	X005a TO-220AB Weight = 2 g
DSS 10-01AS		10	160	0.66	10	1.3	0.8	175	1.7	X011b	
DSS 16-01A		16	155	0.65	16	5	1.0	175	1.4	X005b	
DSS 16-01AS		16	155	0.65	16	5	1.0	175	1.4	X011b	
DSS 20-01AC		20	140	0.76	20	7	0.8	175	1.7	X010b	
➤ DSSS 30-01AR		30	155	0.63	30	11	1.5	175	0.8	X016a	
DSSK 16-01A		2x8	165	0.63	8	1.3	0.8	175	1.7	X005a	X005b TO-220 AC Weight = 2 g
DSSK 16-01AS		2x8	165	0.63	8	1.3	0.8	175	1.7	X011b	
DSSK 28-01A		2x15	160	0.64	15	5	1.0	175	1.4	X005a	
DSSK 28-01AS		2x15	160	0.64	15	5	1.0	175	1.4	X011b	
DSSK 30-01A		2x15	160	0.63	15	5	1.0	175	1.4	X014a	
DSSK 50-01A		2x25	155	0.64	25	5	1.0	175	1.1	X014a	X010b ISOPLUS220™ Weight = 2 g
DSS 2x41-01A		2x40	110	0.70	40	5	1.0	150	1.1	X027a	
DSS 2x61-01A		2x60	105	0.74	60	11	1.5	150	0.8	X027a	
DSS 2x160-01A ①		2x160	95	0.81	160	11	1.5	150	0.3	X027b	
DSS 6-015AS	150	6	160	0.62	6	0.05	0.1	175	3.0	X004	
DSSK 20-015A		2x10	165	0.65	10	0.2	0.2	175	1.4	X005a	X011b TO-263AB Weight = 2 g
DSSK 50-015A		2x25	150	0.68	25	tbd	tbd	175	1.1	X014a	
DSSK 60-015A		2x30	155	0.66	30	0.8	0.4	175	0.8	X014a	
DSSK 60-015AR		2x30	155	0.66	30	0.8	0.4	175	0.8	X016a	
DSS 2x101-015A	150	2x100	110	0.77	100	0.8	0.4	150	0.4	X027a	
DSSK 10-018A	180	2x5	165	0.62	5	tbd	tbd	175	1.7	X005a	
DSSK 30-018A		2x15	150	0.72	15	tbd	tbd	175	1.7	X014a	X014a TO-247 AD Weight = 6 g
➤ DSSK 60-02A	200	2x30	155	0.70	30	0.8	0.4	175	0.8	X014a	
➤ DSSK 60-02AR		2x30	155	0.70	30	0.8	0.4	175	0.8	X016a	
➤ DSS 2x101-02A		2x100	105	0.84	100	tbd	tbd	150	0.4	X027a	

Data per Diode unless otherwise specified
① non isolated base plate

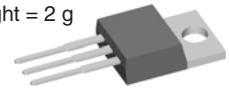

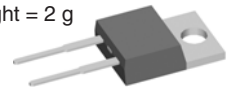

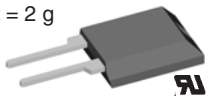

X016a ISOPLUS247™
Weight = 5 g

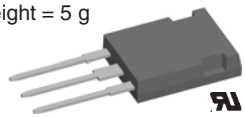

X024b ISOPLUS i4-PAC™
Weight = 6 g

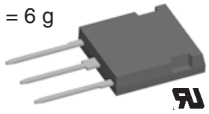

X027a/b SOT-227B
Weight = 30 g miniBLOC

Schottky Gen² Diodes

I_{FAV} = 1 - 120 A

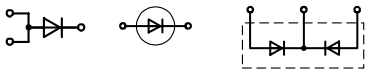

DS...IM... DS...I... DS...C...

Type ➤ New	V_{RRM} V	I_{FAV} d = 0.5 A	T_C °C	V_F max. T_{VJM} = 125°C V	I_F A	E_{AS} mJ	I_{AR} A	T_{VJM} °C	R_{thJC} K/W	Fig. No.	Package style Outline drawings on page 188 - 224
➤ DSB 20I15PA	15	20	125	0.45	20	tbd	tbd	150	1.75	X005b	X001 SMA (DO-214AC) Weight = 0.07 g
➤ DSB 40C15PB		2x20	125	0.45	20				1.75	X005a	
➤ DSB 30C30PB	30	2x15	130	0.44	15	tbd	tbd	150	1.75	X005a	
➤ DSB 60C30HB		2x30	125	0.47	30				0.95	X014a	
➤ DSB 1I40SA	40	1	125	0.40	1	tbd	tbd	150	R_{thJL}40	X001	X002 SMB (DO-214AA) Weight = 0.1 g
➤ DSB 2I40SB		2	125	0.42	2				R_{thJL}25	X002	
➤ DSB 10I45PM	45	10	115	0.53	10	tbd	tbd	150	4.50	X007b	
➤ DSA 20C45PB		2x10	155	0.62	10			175	2.60	X005a	
➤ DSA 15I45PA		15	155	0.63	15			175	1.75	X005b	
➤ DSA 15IM45IB		15	155	0.63	15			175	1.75	X008	X005a TO-220AB Weight = 2 g
➤ DSB 15IM45IB		15	125	0.55	15			150	1.75	X008	
➤ DSA 30C45PB		2x15	155	0.63	15			175	1.75	X005a	
➤ DSB 30C45PB		2x15	125	0.55	15			150	1.75	X005a	
➤ DSA 30C45HB		2x15	155	0.62	15			175	1.75	X014a	
➤ DSB 30C45HB		2x15	125	0.54	15			150	1.75	X014a	
➤ DSA 60C45PB		2x30	150	0.67	30			175	0.85	X005a	X005b TO-220 AC Weight = 2 g
➤ DSB 60C45PB		2x30	125	0.60	30			150	0.85	X005a	
➤ DSA 60C45HB		2x30	150	0.66	30			175	0.95	X014a	
➤ DSB 60C45HB		2x30	125	0.58	30			150	0.95	X014a	
➤ DSA 80C45HB		2x40	150	0.67	40			175	0.70	X014a	
➤ DSB 80C45HB		2x40	125	0.58	40			150	0.70	X014a	
➤ DSB 1I60SA	60	1	125	0.50	1	tbd	tbd	150	R_{thJL}40	X001	X007a TO-220ABFP Weight = 2 g
➤ DSB 2I60SB		2	125	0.52	2			150	R_{thJL}25	X002	
➤ DSA 20C60PN		2x10	140	0.68	10			175	4.50	X007a	
➤ DSB 20C60PN		2x10	115	0.63	10			150	4.50	X007a	
➤ DSA 30C60PB		2x15	150	0.70	15			175	1.75	X005a	
➤ DSB 30C60PB		2x15	125	0.69	15			150	1.75	X005a	X007b TO-220ACFP Weight = 2 g
➤ DSA 60C60PB		2x30	150	0.74	30			175	0.85	X005a	
➤ DSB 60C60PB		2x30	125	0.69	30			150	0.85	X005a	
➤ DSA 60C60HB		2x30	150	0.72	30			175	0.95	X014a	
➤ DSB 60C60HB		2x30	125	0.67	30			150	0.95	X014a	
➤ DSA1I100SA	100	1	125	0.65	1	tbd	tbd	175	R_{thJL}40	X001	
➤ DSA2I100SB		2	125	0.65	2				R_{thJL}25	X002	X008 TO-262 (i2-Pac) Weight = 2 g
➤ DSA20C100PB		2x10	150	0.72	10				2.60	X005a	
➤ DSA20C100PN		2x10	140	0.72	10				4.50	X007a	
➤ DSA30C100PB		2x15	150	0.73	15				1.75	X005a	
➤ DSA30C100PN		2x15	120	0.73	15				4.20	X007a	
➤ DSA30C100QB		2x15	150	0.72	15				1.75	X017a	
➤ DSA50C100HB		2x25	155	0.72	25				0.95	X014a	X014a TO-247 AD Weight = 6 g
➤ DSA50C100QB		2x25	155	0.72	25				0.95	X017a	
➤ DSA60C100PB		2x30	150	0.78	30				0.85	X005a	
➤ DSA70C100HB		2x35	150	0.74	35				0.70	X014a	
➤ DSA80C100PB		2x40	150	0.73	40				0.60	X005a	
➤ DSA20C150PB	150	2x10	150	0.74	10	tbd	tbd	175	2.60	X005a	
➤ DSA20C150PN		2x10	140	0.74	10				4.50	X007a	X017a TO-3P Weight = 5 g
➤ DSA30C150PB		2x15	150	0.75	15				1.75	X005a	
➤ DSA50C150HB		2x25	155	0.74	25				0.95	X014a	
➤ DSA70C150HB		2x35	150	0.74	35				0.70	X014a	
➤ DSA120C150QB		2x60	150	0.80	60				0.40	X017a	
➤ DSA90C200HB	200	2x45	150	0.88	45	tbd	tbd	175	0.55	X014a	

Data according to IEC 60747 and refer to a single diode or thyristor unless otherwise stated.

HiPerDyn™ FRED

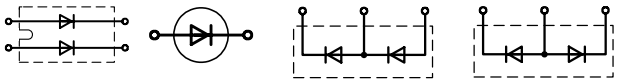

DSEP 2x... DSEP... DSS... DSEE... DSEA...

Series connected diodes for high switching frequencies; packages isolated (2500 V_{RMS})

Type	V_{RRM} V	I_{FAV} @ T_C d = 0.5 A	°C	V_F @ T_{VJ} max. $I_F = I_{FAV}$ V	°C	t_{rr} typ. T_{VJ} = 25°C ns	I_{RM} @ -di/dt typ. T_{VJ} = 100°C A	A/µs	T_{VJM} °C	R_{thJC} K/W	Fig. No.
DSEP 9-06CR	600	9	140	2.9	150	15	3.5	100	175	1.0	X016b
DSS 17-06CR ∗		17	95	2.71	125	45	4.0	100	175	1.4	
DSEP 30-06CR		30	140	2.25	150	15	2.5	100	175	0.6	
DSEP 15-12CR	1200	15	130	2.67	150	20	4.0	100	175	1.0	
DSEP 30-12CR		30	115	3.1	150	20	4.0	100	175	0.6	
DSEP 2x35-06 C	600	35	100	1.97	125	20	4.5	100	150	0.6	X027a
DSEP 2x25-12 C	1200	25	90	3.0	125	20	3.0	100	150	0.6	

∗ series connected Schottky Diodes

Package style

Outline drawings on page 188 - 224

X010a **ISOPLUS220AB™**
Weight = 2 g

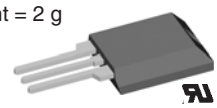

X014a **TO-247 AD**
Weight = 6 g

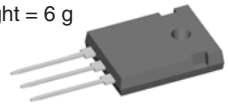

X016b **ISOPLUS247™**
Weight = 5 g

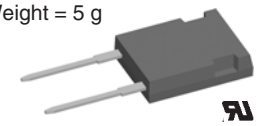

X024b **ISOPLUS i4-PAC™**
Weight = 6 g

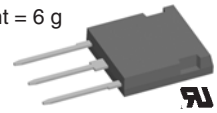

X027a **SOT-227B miniBLOC**
Weight = 30 g

Dual Ultrafast Diodes

Series connected diodes for high switching frequencies with middle connection; packages isolated (2500 V_{RMS})

Type ➤ New	V_{RRM} V	I_{FAV} @ T_C d = 0.5 A	°C	$V_{F\,max}$ @ T_{VJ} $I_F = I_{FAV}$ V	°C	$t_{rr\,typ.}$ T_J = 25°C ns	$I_{RM\,typ}$ @-di/dt T_J = 100°C A	A/µs	T_{VJM} °C	R_{thJC} K/W	Fig. No.
DSEE 6-06CC	2x300	6	150	1.35	125	20	2	100	175	3.0	X010a
DSEE 8-06CC		10	130	1.30	125	30	2	100	175	2.75	
DSEE 15-06CC		15	115	1.25	125	30	2	100	175	1.6	
DSEE 29-06CC		30	115	1.01	125	30	4.5	100	175	0.9	
DSEE 8-08CC	2x400	10	130	1.12	125	30	2	100	175	2.75	
DSEE 15-12CC	2x600	15	100	1.50	125	35	4	100	175	1.6	
DSEE 29-12CC		30	90	1.75	125	30	4	100	175	0.9	
DSEE 30-12A ①		30	90	1.78	125	30	4	100	175	0.9	X014a
DSEE 55-24N1F	2x1200	55	90	1.50 typ.	125	220 / 125°C	79 / 125°C	750	150	0.63	X024b

① Non isolated base plate

Common anode connected

DSEA 16-06AC	600	2x8	120	1.42	150	35	3.5	100	175	3	X010a
DSEA 16-06BC		2x8	110	1.65	150	30	1.4	100	175	2.5	
DSEA 29-06AC		2x15	130	1.34	150	35	4	100	175	2.0	
DSEA 59-06BC		2x30	105	1.56	150	30	4	100	175	1.1	

Data according to IEC 60747 and refer to a single diode or thyristor unless otherwise stated.

SONIC-FRD™ Diodes

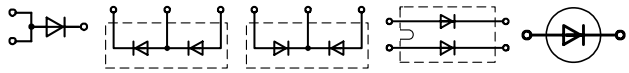

DHG...IM... DHH... DH...C... DH 2x... DH...I...

I_{FAV} = 10 - 120 A

- ultrasoft and fast recovery
- very low temperature dependence

Type ➤ New	V_{RRM} V	I_{FAV} d = 0.5 A	T_C °C	@ I_{FSM} 45°C A	V_F 10 ms max. T_{VJM} = 150°C V	@ I_F A	t_{rr} T_{VJ} = 25°C ns	I_{RM} typ. T_{VJ} = 100°C A	-di/dt typ. A/µs	T_{VJM} °C	R_{thJC} K/W	Fig.	Package style No. Outline drawings on page 188 - 224
➤ DHG 10I600PA	600	10	95	100	2.20	10	35	4	200	150	1.80	X005b	X005b TO-220 AC Weight = 2 g
➤ DHG 10I600PM		10	30	100	2.20	10		4	200		4.00	X007b	
➤ DHG 20C600QB		2x10	100	100	2.20	10		4	200		1.80	X017a	
➤ DHG 30I600PA		30	95	200	2.22	30		12	600		0.60	X005b	
➤ DHF 30IM600PN		15	35	200	2.22	30		12	600		3.50	X007a	X007a TO-220ABFP Weight = 2 g
➤ DHG 30I600HA		30	85	200	2.20	30		12	600		0.70	X014b	
➤ DHF 30IM600QB		30	85	200	2.20	30		12	600		0.70	X017a	
➤ DHG 60C600HB		2x30	85	200	2.20	30		12	600		0.70	X014a	
➤ DHG 30I1200HA	1200	30	85	180	2.40	30	75	25	1000	150	0.70	X014b	
➤ DH 20-18A	1800	20	80	150	2.94	20	150	16	200	150	0.90	X014b	X007b TO-220ACFP Weight = 2 g
➤ DH 40-18A		40	85	350	2.69	40		33	400		0.45	X014b	
DH 60-18A		60	80	650	2.65	60		50	600		0.30	X014b	
➤ DHH 55-36N1F		60	80	650	2.65	60		50	600		0.30	X024b	
DH 2x61-18A		60	25	650	2.61	60		50	600		0.60	X027a	X014a TO-247 AD Weight = 6 g

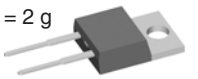

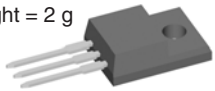

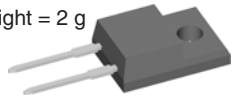

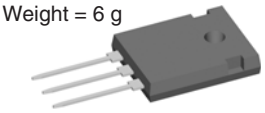

X014b TO-247 AD Weight = 6 g

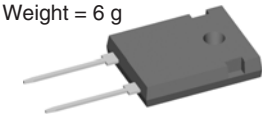

X027a SOT-227B miniBLOC Weight = 30 g

X024b ISOPLUS i4-PAC™ Weight = 6 g

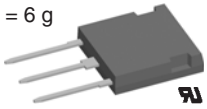

X017a TO-3P Weight = 5 g

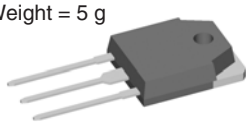

HiPerFRED™ Diodes

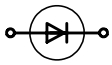

DSEP...

I_{FAV} = 8 - 2x120 A

Type ➤ New	V_{RRM} V	I_{FAV} @ T_C d = 0.5 A	°C	I_{FSM} 10 ms 45°C A	V_F @ I_F max. T_{VJM} = 150°C V	A	t_{rr} typ. T_{VJ} = 25°C ns	I_{RM} @ -di/dt typ. T_{VJ} = 100°C A	A/µs	T_{VJM} °C	R_{thJC} K/W	Fig. No.	Package style Outline drawings on page 188 - 224
DSEP 8-02A	200	8	150	80	0.94	8	25	4.1	100	175	2.5	X005b	X004 TO-252AA Weight = 0.3 g
DSEP 8-03A	300	10	130	60	1.29	10	30	2.4	100	175	2.5	X005b	
DSEP 8-03AS		8	152	60	1.13	8	30	2.4	100	175	2.5	X004	
DSEP 15-03A		15	135	140	1.21	15	30	2.7	100	175	1.6	X005b	
DSEP 29-03A		30	145	300	0.93	30	30	7.0	100	175	0.9	X005b	X005b TO-220 AC Weight = 2 g
DSEP 30-03A		30	140	300	1.09	30	25	3.5	100	175	0.9	X014b	
➤ DSEP 30-03AS		30	135	300	1.02	30	35	3.0	200	175	0.85	X011b	
➤ DSEP 40-03AS		40	120	300	1.11	40	35	3.5	200	175	0.85	X011b	
DSEP 60-03A		60	110	700	1.25	60	30	4.8	100	175	0.65	X014b	X011b TO-263AB Weight = 2 g
DSEP 30-04A	400	30	140	280	1.11	30	30	6.8	100	175	0.9	X014b	
DSEP 60-04A		60	120	600	1.01	60	30	7.5	100	175	0.65	X014b	
DSEP 6-06AS	600	6	152	40	1.33	6	20	4.4	100	175	2.8	X004	X014b TO-247 AD Weight = 6 g
DSEP 8-06A		10	135	50	1.42	10	35	4.4	100	175	2.5	X005b	
DSEP 8-06B		10	125	50	1.66	10	30	2.4	100	175	2.5	X005b	
DSEP 15-06A		15	140	110	1.35	15	35	4.9	100	175	1.6	X005b	
DSEP 15-06B		15	130	110	1.55	15	25	2.6	100	175	1.6	X005b	
DSEP 29-06A		30	135	250	1.26	30	35	6.0	100	175	0.9	X005b	X016b ISOPLUS247™ Weight = 5 g
DSEP 29-06AS		30	135	250	1.26	30	35	6.0	100	175	0.9	X011b	
DSEP 29-06B		30	125	200	1.58	30	30	4.0	100	175	0.9	X005b	
DSEP 30-06A		30	135	250	1.25	30	35	6.0	100	175	0.9	X014b	
DSEP 30-06B		30	125	250	1.56	30	30	4.0	100	175	0.9	X014b	
DSEP 30-06BR		30	115	250	1.56	30	30	4.0	100	175	1.1	X016b	X019 TO-268 AA Weight = 5 g
DSEP 60-06A		60	110	600	1.39	60	35	8.3	100	175	0.65	X014b	
DSEP 60-06AT		60	110	600	1.39	60	35	8.3	100	175	0.65	X019	

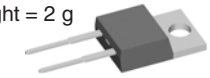

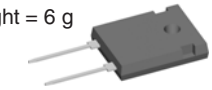

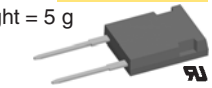

Data according to IEC 60747 and refer to a single diode or thyristor unless otherwise stated.

HiPerFRED™ Diodes

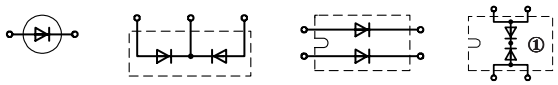

I_{FAV} = 8 - 2x120 A

DSEP... DSEC... DSEP 2x.... DSEC

Type ➤ New	V_{RRM} V	I_{FAV} @ T_C d = 0.5 A	°C	I_{FSM} 10 ms 45°C A	V_F @ I_F max. T_{VJM} = 150°C V	A	t_{rr} typ. T_{VJ} = 25°C ns	I_{RM} @-di/dt typ. T_{VJ} = 100°C A	A/µs	T_{VJM} °C	R_{thJC} K/W	Fig. No.
DSEP 8-12A	1200	10	115	40	1.96	10	40	4.0	100	175	2.5	X005b
DSEP 12-12A		15	125	90	1.79	15	40	4.5	100	175	1.6	X005b
➤ **DSEP 12-12B**		15	125	90	2.20	15	35	3.7	100	175	1.6	X005b
DSEP 29-12A		30	115	200	1.81	30	40	8.5	100	175	0.9	X005b
DSEP 30-12A		30	115	200	1.79	30	40	8.5	100	175	0.9	X014b
DSEP 30-12AR		30	110	200	1.79	30	40	8.5	100	175	1.1	X016b
DSEP 60-12A		60	90	500	1.74	60	40	8.5	100	175	0.65	X014b
DSEP 60-12AR		60	85	500	1.74	60	40	8.5	100	175	0.65	X016b
DSEC 16-02A	200	2x8	150	80	0.94	8	25	3.5	100	175	2.5	X005a
DSEC 29-02A		2x15	150	140	0.86	15	25	3.5	100	175	1.6	X005a
DSEC 29-02AS		2x15	150	140	0.86	15	25	3.5	100	175	1.6	X011b
DSEC 30-02A		2x15	150	140	0.85	15	25	3.5	100	175	1.6	X014a
DSEC 60-02A		2x30	145	325	0.95	30	25	4.0	100	175	0.9	X014a
DSEC 60-02AQ		2x30	145	325	0.95	30	25	4.0	100	175	0.9	X017a
DSEC 30-03A	300	2x15	140	110	1.20	15	30	2.0	100	175	1.6	X014a
DSEC 60-03A		2x30	145	300	0.91	30	30	4.5	100	175	0.9	X014a
DSEC 59-03AQ		2x30	125	300	1.00	30	30	3.0	100	175	1.4	X017a
DSEC 60-03AR		2x30	135	300	0.91	30	30	4.5	100	175	1.1	X016a
DSEC 16-04AS	400	2x10	140	60	1.12	10	30	2.0	100	175	2.5	X011b
DSEC 30-04A		2x15	145	tbd	1.06	15	30	5.0	100	175	1.6	X014a
DSEC 60-04A		2x30	140	tbd	1.09	30	30	5.5	100	175	0.9	X014a
DSEC 16-06A	600	2x10	135	50	1.42	10	35	3.5	100	175	2.5	X005a
DSEC 16-06AC		2x8	85	50	1.20	10	35	3.5	100	175	3.0	X010a
DSEC 16-06BC		2x8	110	50	1.76	8	30	1.4	100	175	2.5	X010a
DSEC 29-06AC		2x15	140	110	1.34	15	35	4.0	100	175	1.6	X010a
DSEC 30-06A		2x15	140	110	1.34	15	35	4.0	100	175	1.6	X014a
DSEC 30-06B		2x15	125	110	1.59	15	25		100	175	1.6	X014a
DSEC 59-06BC		2x30	105	200	1.56	30	30	4.0	100	175	1.1	X010a
DSEC 60-06A		2x30	135	250	1.25	30	35	6.0	100	175	0.9	X014a
DSEC 60-06B		2x30	125	250	1.56	30	30	4.0	100	175	0.9	X014a
DSEC 16-12A	1200	2x10	115	40	1.96	10	40	4.0	100	175	2.5	X005a
DSEC 30-12A		2x15	125	90	1.78	15	40	4.5	100	175	1.6	X014a
DSEC 60-12A		2x30	115	200	1.78	30	40	5.5	100	175	0.9	X014a
DSEC 120-12AK		2x60	90	500	1.74	60	40	7.0	100	175	0.65	X020
DSEP 2x31-03A	300	2x30	110	300	0.96/125°C	30	30	4.5	100	150	1.15	X027a
DSEP 2x61-03A		2x60	75	600	1.26	60	30	4.0	100	150	0.85	
DSEP 2x91-03A		2x90	65	1000	1.30	90	30	4.5	100	150	0.6	
DSEP 2x31-04A	400	2x30	105	280	1.15	30	30	5.5	100	150	1.15	
DSEP 2x31-06A	600	2x30	95	250	1.30	30	35	6.0	100	150	1.15	
DSEP 2x31-06B		2x30	85	250	1.73	30	30	4.0	100	150	1.15	
DSEP 2x61-06A		2x60	65	600	1.48	60	35	6.5	100	150	0.85	
DSEP 2x91-06A		2x90	55	1000	1.52	90	35	6.0	100	150	0.6	
DSEP 2x31-12A	1200	2x30	70	200	1.96	30	40	8.5	100	150	1.15	
DSEP 2x60-12A		2x60	80	800	1.70	60	40	8.0	100	150	0.6	
DSEP 2x61-12A		2x60	80	800	1.70	60	40	8.0	100	150	0.6	
DSEP 2x101-04A	400	2x101	60	1000	1.24	125	30	5.5	100	150	0.6	
DSEC 240-04A ①	400	2x120	115	2000	1.07	120	30	5.5	100	150	0.2	X027b
DSEC 240-06A ①	600	2x120	105	2000	1.39	120	35	6.0	100	150	0.2	

① Non isolated base plate

Package style

Outline drawings on page 188 - 224

X005a **TO-220AB**
Weight = 2 g

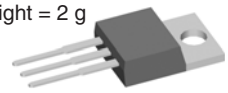

X005b **TO-220 AC**
Weight = 2 g

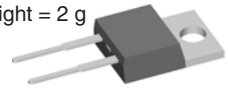

X010a **ISOPLUS220™**
Weight = 2 g

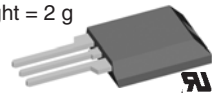

X011b **TO-263AB**
Weight = 2 g

X014b **TO-247 AD**
Weight = 6 g

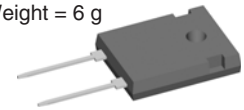

X014a **TO-247 AD**
Weight = 6 g

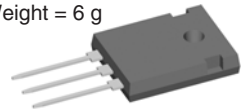

X016a **ISOPLUS247™**
Weight = 5 g

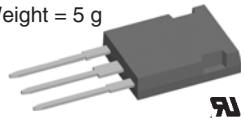

X016b **ISOPLUS247™**
Weight = 5 g

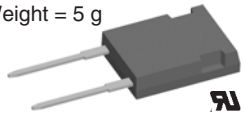

X017a **TO-3P**
Weight = 5 g

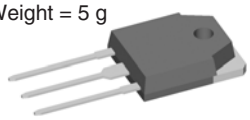

X020 **TO-264**
Weight = 10 g

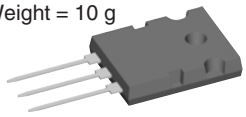

X027a/b **SOT-227B**
Weight = 30 g **miniBLOC**

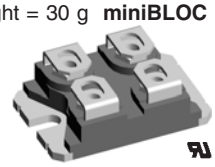

Data according to IEC 60747 and refer to a single diode or thyristor unless otherwise stated.

HiPerFRED^2 Diodes

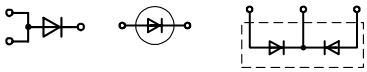

DPG...IM... DPG...I... DPG...C...

I_{FAV} = 10 - 120 A

Type ➤ New	V_{RRM} V	I_{FAV} @ T_C d = 0.5 A	°C	I_{FSM} 10 ms 45°C A	V_F @ I_F max. T_{VJM} = 150°C V	A	t_{rr} typ. T_{VJ} = 25°C ns	I_{RM} @ -di/dt typ. T_{VJ} = 25°C A	A/µs	T_{VJM} °C	R_{thJC} K/W	Fig. No.
➤ DPG 10I200PA	200	10	145	100	0.98	10	35	3	200	175	2.30	X005b
➤ DPG 10I200PM		10	125	100	0.98	10					4.40	X007b
➤ DPG 20C200PB		2x10	145	100	0.98	10					2.30	X005a
➤ DPG 20C200PN		2x10	125	100	0.98	10					4.40	X007a
➤ DPG 15I200PA		15	140	150	1.00	15					1.70	X005b
➤ DPG 30C200PB		2x15	140	150	1.00	15					1.70	X005a
➤ DPG 30C200HB		2x15	140	150	1.00	15					1.70	X014a
➤ DPG 60C200QB		2x30	135	300	1.06	30					0.95	X017a
➤ DPG 10I300PA	300	10	140	100	0.98	10	35	3	200	175	2.30	X005b
➤ DPG 20C300PB		2x10	145	100	0.98	10					2.30	X005a
➤ DPG 20C300PN		2x10	125	100	0.98	10					4.40	X007a
➤ DPG 15I300PA		15	140	150	1.00	15					1.70	X005b
➤ DPG 30C300PB		2x15	140	150	1.00	15					1.70	X005a
➤ DPG 30C300PC		2x15	140	150	1.00	15					1.70	X011b
➤ DPG 30C300HB		2x15	140	150	1.00	15					1.70	X014a
➤ DPG 60C300HB		2x30	135	300	1.06	30					0.95	X014a
➤ DPG 60C300QB		2x30	135	300	1.06	30					0.95	X017a
➤ DPG 60IM300PC		60	135	550	1.10	60					0.45	X011b
➤ DPG 120C300QB		2x60	125	550	1.10	60					0.55	X017a
➤ DPG 10I400PA	400	10	145	100	1.04	10	45	4	200	175	2.30	X005b
➤ DPG 10I400PM		10	120	100	1.04	10					4.40	X007b
➤ DPG 20C400PB		2x10	145	100	1.04	10					2.30	X005a
➤ DPG 30C400HB		2x15	140	150	1.07	15					1.70	X014a
➤ DPG 60C400QB		2x30	135	300	1.13	30					0.95	X017a
➤ DPG 60I400HA		60	120	600	1.22	60					0.55	X014b
➤ DPG 60IM400QB		60	120	600	1.22	60					0.55	X017a

Package style

Outline drawings on page 188 - 224

X004 **TO-252AA**
Weight = 0.3 g

X005a **TO-220AB**
Weight = 2 g

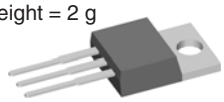

X005b **TO-220 AC**
Weight = 2 g

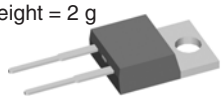

X007a **TO-220ABFP**
Weight = 2 g

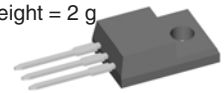

X007b **TO-220ACFP**
Weight = 2 g

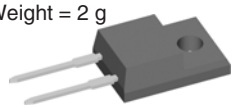

X011b **TO-263AB**
Weight = 2 g

X014a **TO-247 AD**
Weight = 6 g

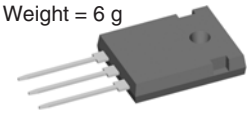

X014b **TO-247 AD**
Weight = 6 g

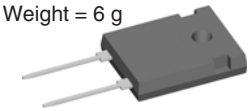

X016a **ISOPLUS247™**
Weight = 5 g

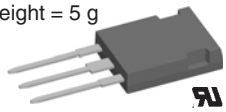

X016b **ISOPLUS247™**
Weight = 5 g

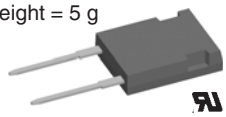

X017a **TO-3P**
Weight = 5 g

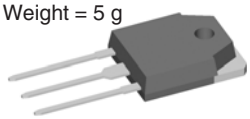

X019 **TO-268 AA**
Weight = 5 g

FRED Diodes

Fast Recovery Epitaxial Diodes (FRED)

I_{FAV} = 6 - 120 A

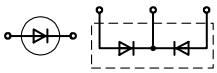

DSEI... DSEK...

Type T_{VJM} = 150°C ➤ New	V_{RRM} V	I_{FAV} @ T_C d = 0.5 A	°C	I_{FRMS} A	I_{FSM} 10 ms 45°C A	V_F @ I_F max. T_{VJ} = 150°C V	A	t_{rr} typ. T_{VJ} = 25°C ns	I_{RM} @ -di/dt typ. T_{VJ} = 100°C A	A/µs	R_{thJC} K/W	Fig. No.
DSEI 6-06AS	600	6	125	16	65	1.3	8	35	2.5	64	3.0	X004
DSEI 8-06A	600	8	115	16	100	1.3	8	35	2.5	64	2.5	X005b
DSEI 8-06AS	600	8	115	16	100	1.3	8	35	2.5	64	2.5	X011b
DSEI 12-06A	600	14	100	25	100	1.5	16	35	4	100	2.0	X005b
DSEI 12-10A	1000	12	100	25	75	2.1	12	50	6.5	100	1.6	
DSEI 12-12A	1200	11	100	25	75	2.2	12	50	6.5	100	1.6	
DSEI 20-12A	1200	17	85	70	130	1.87	12	40	7	100	1.6	
DSEI 19-06AS	600	20	65	25	100	1.5	16	35	4	100	2.0	X011b
DSEI 36-06AS	600	37	85	70	300	1.4	37	35	10	240	1.0	
DSEI 30-06A	600	37	85	70	300	1.4	37	35	10	240	1.0	X014b
DSEI 30-10A	1000	30	85	70	200	2.0	36	35	16	240	0.9	
DSEI 30-10AR	1000	30	85	70	200	2.0	36	35	16	240	0.9	X016b
DSEI 30-12A	1200	26	85	70	200	2.2	30	40	16	240	0.9	X014b
DSEI 60-02A	200	69	85	98	600	0.88	60	35	8	200	0.75	X014b
DSEI 60-06A	600	60	70	100	550	1.5	70	35	19	480	0.75	
DSEI 60-06AT	600	60	70	100	550	1.5	70	35	19	480	0.75	X019
DSEI 60-10A	1000	60	60	100	500	1.8	60	35	32	480	0.66	
DSEI 60-12A	1200	52	60	100	500	2.0	60	40	32	480	0.66	
DSEI 120-06A	600	126	70	100	600	1.12	70	35	17	200	0.35	X014b
DSEI 120-12A	1200	109	60	100	600	1.55	70	40	25	200	0.35	
DSEK 60-02A	200	2x34	115	50	325	0.85	30	35	4	100	1.0	X014a
DSEK 60-02AR	200	2x34	115	50	325	0.85	30	35	4	100	1.0	X016a
DSEK 60-06A	600	2x30	85	50	300	1.4	37	35	10	240	1.0	X014a
DSEK 60-12A	1200	2x26	85	50	200	2.2	30	40	16	240	0.9	

Data according to IEC 60747 and refer to a single diode or thyristor unless otherwise stated.

Fast Recovery Epitaxial Diodes (FRED)

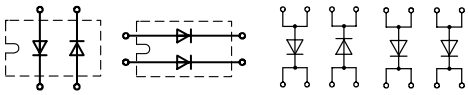

I_{FAV} = 2x30 - 2x160 A

Type T_{VJM} = 150°C ➤ New	V_{RRM} V	I_{FAV} @ T_C d = 0.5 A	°C	I_{FRMS} 45°C A	I_{FSM} 10 ms A	V_F @ I_F max. T_{VJ} = 150°C V	A	t_{rr} typ. T_{VJ} = 25°C ns	I_{RM} @ -di/dt typ. T_{VJ} = 100°C A	A/µs	R_{thJC} K/W	Fig. No.
DSEI 2x30-06P	600	2x30	85	70	300	1.4	30	35	10	240	1.25	X101
DSEI 2x30-10P	1000	2x30	50	70	200	2.0	30	35	16	240	1.25	
DSEI 2x30-12P	1200	2x28	50	70	200	2.2	30	40	16	240	1.25	
DSEI 2x30-04C	400	2x30	85	70	300	1.4	30	35	10	240	1.25	X027a
DSEI 2x30-06C	600	2x30	85	70	300	1.4	30	35	10	240	1.25	
DSEI 2x30-10B	1000	2x30	50	70	200	2.0	30	35	16	240	1.25	
DSEI 2x30-12B	1200	2x28	50	70	200	2.2	30	40	16	240	1.25	
DSEI 2x31-06P	600	2x30	85	70	300	1.4	30	35	10	240	1.25	X101
DSEI 2x31-10P	1000	2x30	50	70	200	2.0	30	35	16	240	1.25	
DSEI 2x31-12P	1200	2x28	50	70	200	2.2	30	40	16	240	1.25	
DSEI 2x31-04C	400	2x30	85	70	300	1.4	30	35	10	240	1.25	X027a
DSEI 2x31-06C	600	2x30	85	70	300	1.4	30	35	10	240	1.25	
DSEI 2x31-10B	1000	2x30	50	70	200	2.0	30	35	16	240	1.25	
DSEI 2x31-12B	1200	2x28	50	70	200	2.2	30	40	16	240	1.25	
DSEI 2x61-02P	200	2x71	85	100	950	0.88	60	35	8	200	0.8	X101
DSEI 2x61-06P	600	2x60	70	100	550	1.50	60	35	19	480	0.7	
DSEI 2x61-10P	1000	2x60	50	100	500	1.80	60	35	32	480	0.7	
DSEI 2x61-12P	1200	2x52	50	100	450	2.15	60	40	32	540	0.7	
DSEI 2x61-02A	200	2x71	85	100	950	0.88	60	35	8	200	0.8	X027a
DSEI 2x61-04C	400	2x60	70	100	550	1.50	60	35	19	480	0.7	
DSEI 2x61-06C	600	2x60	70	100	550	1.50	60	35	19	480	0.7	
DSEI 2x61-10B	1000	2x60	50	100	500	1.80	60	35	32	480	0.7	
DSEI 2x61-12B	1200	2x52	50	100	450	2.15	60	40	32	480	0.7	
DSEI 2x121-02P	200	2x123	70	150	1200	0.95	120	35	12	200	0.7	X102
DSEI 2x121-02A	200	2x123	70	150	1200	0.95	120	35	12	200	0.5	X027a
DSEI 2x101-06P	600	2x96	70	150	1200	1.17	100	40	19	200	0.5	X102
DSEI 2x101-12P	1200	2x91	50	130	900	1.61	100	40	24	200	0.5	
DSEI 2x101-06A	600	2x96	70	150	1200	1.17	100	35	19	200	0.5	X027a
DSEI 2x101-12A	1200	2x91	50	130	900	1.61	100	40	24	200	0.5	
DSEI 2x161-02P	200	2x165	70	270	1200	1.05	200	35	20	200	0.29	X102
DSEI 2x161-06P	600	2x147	70	270	1200	1.40	200	35	45	200	0.29	
DSEI 2x161-12P	1200	2x128	70	270	1200	1.75	200	40	48	200	0.29	

Package style

Outline drawings on page 188 - 224

X027a **SOT-227B**
Weight = 30 g **miniBLOC**

X101 **ECO-PAC 1**
Weight = 19 g

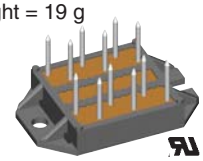

See data sheet for pin arrangement

X102 **ECO-PAC 2**
Weight = 24 g

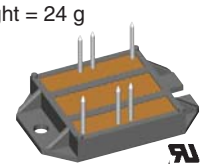

See data sheet for pin arrangement

Data according to IEC 60747 and refer to a single diode or thyristor unless otherwise stated.

FRED & HiPerFRED™ Modules

I_{FAV} = 75 - 582 A

Type T_{VJM} = 150°C ➤ New	V_{RRM} V	I_{FAV} @ T_C d = 0.5 A	°C	I_{FRMS} A	I_{FSM} 10 ms 45°C A	V_F @ I_F max. T_{VJ} = 125°C V	A	t_{rr} typ. T_{VJ} = 25°C ns	I_{RM} @ -di/dt max. T_{VJ} = 100°C A	A/µs	R_{thJC} K/W	P_{tot} max. W	Fig. No.	Package style Outline drawings on page 188 - 224
FRED														X125c Weight = 90 g
MEO 550-02DA	200	582	75	822	4800	1.08	520	150	15	200	0.071	1750	X126c	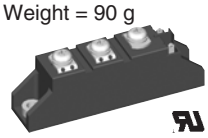
MEO 500-06DA	600	514	75	726		1.41	520	250	132	800		1750		
MEO 450-12DA	1200	453	75	640		1.76	520	450	165	800		1750		
MEK 75-12DA	1200	75	75	107	1200	1.85	100	250	33	200	0.45	280*	X125c	
MEA 75-12DA	1200	75	75											
MEE 75-12DA	1200	75	75											
MEK 95-06DA	600	95	75	142	1200	1.36	100	250	21	200	0.45	280*		X126a Weight 150 g
MEA 95-06DA	600	95	75											
MEE 95-06DA	600	95	75											
MEK 350-02DA	200	356	75	503	2400	0.92	260	150	15	200	0.143	875*		
MEK 300-06DA	600	304	75	430		1.19	260	250	66	400				
MEK 250-12DA	1200	260	75	367		1.54	260	450	83	400				
MEE 300-06DA	600	304	75	430	2400	1.19	260	250	66	400	0.143	875*		
MEE 250-12DA	1200	260	75	367		1.54	260	450	83	400				
MEA 300-06DA	600	304	75	430	2400	1.19	260	250	66	400	0.143	875*		X126c Weight 150 g
MEA 250-12DA	1200	260	75	367		1.54	260	450	83	400				
HiPerFRED														
MEK 150-04DA	400	150	100	200	1200	1.4①	300	300	11 typ.	100	0.35	360	X125c	
MEK 600-04DA	400	575	80	800	3000	1.1	400	220	80 typ.	900	0.11	1100	X126a	
➤ **MPK 95-06DA**	600	95	110	200	1200	1.4	100	35	5.5	100	0.575	215	X125c	

1 phase and 3 phase rectifiers with fast recovery epitaxial diodes (FRED)

*** P_D ① T_{VJM} = 150 °C**

Diode connections for Fig. 125 (TO-240)

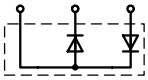

MEE

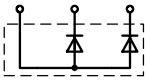

MEA

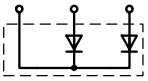

MEK / MPK

Diode connections for Fig. 126 (34 mm package)

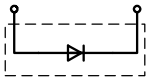

MEO

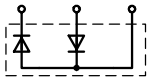

MEE

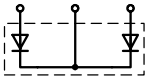

MEK

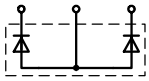

MEA

Data according to IEC 60747 and refer to a single diode or thyristor unless otherwise stated.

Rectifier Diodes

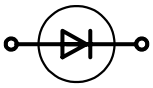

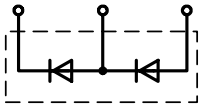

DSP....

I_{FAV} = 2-45 A, Standard Diodes (DS..), Avalanche Diodes (DSA..)

Type ➤ New	V_{RRM} V	I_{FAV} T_C= 100°C A	P_{RSM} kW	I_{FRMS} A	I_{FSM} 45°C 10 ms A	V_{T0} V	r_T mΩ	T_{VJM} °C	R_{thJC} K/W	R_{thCH} K/W		Fig. No.
DS 1-12 D	1200	2.3	-	7	110	0.8	67	150	R_{thJA} = 80			X201
DSA 1-12 D **DSA 1-16 D** **DSA 1-18 D**	1200 1600 1800	T_{amb} = 45°C	1.6	7	110	0.8	67	150	R_{thJA} = 80			
DS 2-08 A **DS 2-12 A**	800 1200	3.6	-	7	120	0.85	43	180	R_{thJA} = 30			X200
DSA 2-12 A **DSA 2-16 A** **DSA 2-18 A**	1200 1600 1800	T_{amb} = 45°C	2.5	7	120	0.85	43	180	R_{thJA} = 30			
DSP 8-08 S **DSP 8-12 S**	800 1200	2x11	-	2x17	100	0.8	40	180	3.5	0.6		X011b
DSP 8-08 A **DSP 8-12 A**	800 1200	2x11	-	2x17	100	0.8	40	180	3.5	0.6		X005a
DSP 8-08 AS **DSP 8-12 AS**	800 1200	2x11	-	2x17	100	0.8	40	180	3.5	0.6		X011a
DSP 8-12 AC①	1200	2x11	-	2x17	100	0.8	41	150	1.8	0.6		X010a
DSP 25-12 A **DSP 25-16 A**	1200 1600	2x28	-	2x43	300	0.8	15	180	1.5	0.4		X014a
DSP 25-16 AR①	1600	2x28	-	2x43	300	0.8	15	180	1.5	0.4		X016a
DSP 25-12 AT **DSP 25-16 AT**	1200 1600	2x28	-	2x43	300	0.8	15	180	1.5	0.4		X019
DSP 45-12 A **DSP 45-16 A**	1200 1600	2x45 T_C=130°C	-	2x70	480	0.8	11	180	0.55	0.2		X014a
DSP 45-16 AR	1600	2x43	-	2x70	480	0.8	11	150	0.7	0.2		X016a
DS 9-08 F **DS 9-12 F**	800 1200	11	-	18	250	0.85	15	180	2	1		X204
DSA 9-12 F **DSA 9-16 F** **DSA 9-18 F**	1200 1600 1800	11	4.5	18	250	0.85	15	180	2	1		
DS 17-08 A **DS 17-12 A**	800 1200	25 T_C=125 °C	-	40	370	0.85	8	180	1.5	0.6		X205
DSA 17-12 A **DSA 17-16 A** **DSA 17-18 A**	1200 1600 1800	25 T_C=125 °C	7	40	370	0.85	8	180	1.5	0.6		
DSI 17-08 A **DSI 17-12 A**	800 1200	25 T_C=125 °C	-	40	370	0.85	8	180	1.5	0.6		
DSAI 17-12 A **DSAI 17-16 A** **DSAI 17-18 A**	1200 1600 1800	25	7	40	370	0.85	8	180	1.5	0.6		
DSI 30-08 A **DSI 30-12 A** **DSI 30-16 A**	800 1200 1600	30 T_C=125 °C	-	-	300	0.85	13	150	1	0.5		X005b
DSI 30-08 AS **DSI 30-12 AS** **DSI 30-16 AS**	800 1200 1600	30	-	-	300	0.85	13	150	1	0.5		X011b
DSI 30-08 AC① **DSI 30-12 AC①**	800 800	30	-	-	200	0.80	15	150	1.1	0.6		X010b

① isolated 2500 V_{RMS}

Package style

Outline drawings on page 188 - 224

X005a **TO-220AB**
Weight = 2 g

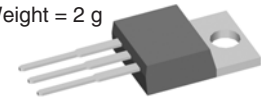

X005b **TO-220 AC**
Weight = 2 g

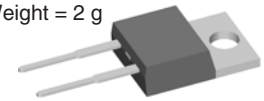

X010a **ISOPLUS220™**
Weight = 2 g

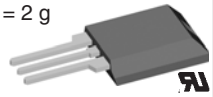

X010b **ISOPLUS220™**
Weight = 2 g

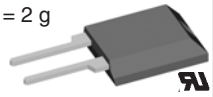

X011b **TO-263AB**
Weight = 2 g

X011a **TO-263 AA**
Weight = 2 g

X014a **TO-247 AD**
Weight = 6 g

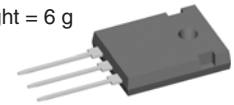

X016a **ISOPLUS247™**
Weight = 5 g

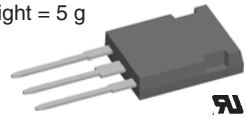

X019 **TO-268 AA**
Weight = 5 g

X200
Weight = 1.5 g

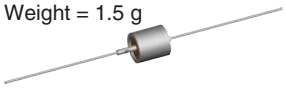

X201
Weight = 0.8 g

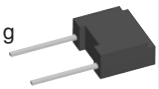

X204 **DO-203AA (DO-4)**
M5
Weight = 5 g

X205
10-32UNF2A
Weight = 6 g

Data according to IEC 60747 and refer to a single diode or thyristor unless otherwise stated.

Rectifier Diodes

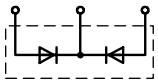
DSIK...

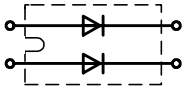
DSI 2x..

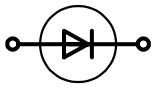

I_{FAV} = 45-160 A, Standard Diodes (DS..), Avalanche Diodes (DSA..)

Type ➤ New	V_{RRM} V	I_{FAV} T_C =100°C A	P_{RSM} kW	I_{FRMS} A	I_{FSM} 45°C 10 ms A	V_{T0} V	r_T mΩ	T_{VJM} °C	R_{thJC} K/W	R_{thCH} K/W		Fig. No.	Package style Outline drawings on page 188 - 224
DS 35-08 A DS 35-12 A	800 1200	49	-	80	650	0.85	4.5	180	1.05	0.2		X206a	X010a ISOPLUS220™ Weight = 2 g
DSA 35-12 A DSA 35-16 A DSA 35-18 A	1200 1600 1800	49	11	80	650	0.85	4.5	180	1.05	0.2			
DSI 35-08 A DSI 35-12 A	800 1200	49	-	80	650	0.85	4.5	180	1.05	0.2		X206a	X010b ISOPLUS220™ Weight = 2 g
DSAI 35-12 A DSAI 35-16 A DSAI 35-18 A	1200 1600 1800	49	11	80	650	0.85	4.5	180	1.05	0.2			
DSI 45-08 A DSI 45-12 A DSI 45-16 A	800 1200 1600	48 T_C=105°C	-	-	475	0.8	8.0	150	0.55	0.2		X014b	X014b TO-247 AD Weight = 6 g
DSI 45-16 AR①	1600											X010b	
DSIK 45-16 AR①	1600	45							0.65			X010a	
DS 75-08 B DS 75-12 B	800 1200	110	-	160	1400	0.75	2.0	180	0.5	0.4		X207	X027a SOT-227B miniBLOC Weight = 30 g
DSA 75-12 B DSA 75-16 B DSA 75-18 B	1200 1600 1800	110	20	160	1400	0.75	2.0	180	0.5	0.4			
DSI 75-08 B DSI 75-12 B	800 1200	110	-	160	1400	0.75	2.0	180	0.5	0.4			
DSAI 75-12 B DSAI 75-16 B DSAI 75-18 B	1200 1600 1800	110	20	160	1400	0.75	2.0	180	0.5	0.4			X206a DO-203AB (DO-5) Weight = 15 g X207 Weight = 21 g
DSI 2x55-12A DSI 2x55-16A	1200 1600	2x56 T_C = 80°C	-	120	650	0.8	8.0	150	0.65	0.1		X027a	

① isolated 2500 V_{RMS}

Data according to IEC 60747 and refer to a single diode or thyristor unless otherwise stated.

Thyristors, SCRs

(SCR = Silicon Controlled Rectifier)

Phase Control Thyristors

Thyristors are very rugged devices. Compared to all other controlled semi-conductor components, they feature the highest current capacity per chip area, especially at high voltage. They are mainly used as control devices in 50 and 60 Hz AC mains equipment.

Principal applications are static converter circuits for speed control of DC-drives, or switching and control functions for temperature, lighting, soft-start, etc. in single-phase and three-phase AC switch configurations . Phase control thyristors are designed for optimal forward conduction and reverse blocking characteristics, due to only moderate requirements for turn-on and turn-off parameters.

Phase Control Thyristors

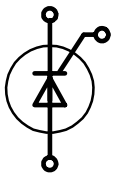

I_{TAV} = 16 - 60 A

Type ➤ New	V_{RRM} V_{DRM} V	I_{TAV} T_C = 85°C A	I_{TRMS} A	I_{TSM} 45°C 10 ms A	$\left[\frac{dv}{dt}\right]_c$ V/µs	V_{T0} V	r_T mΩ	T_{VJM} °C	R_{thJC} K/W	R_{thCH} K/W	Fig. No.	Package style Outline drawings on page 188 - 224
CS 8-08 io2 **CS 8-12 io2**	800 1200	16	25	250	1000	1.0	18	125	1.5	1.0	X208	X005a **TO-220AB** Weight = 2 g
CS 19-08 ho1 **CS 19-12 ho1**	800 1200	19	29	160	500	0.85	27.0	125	1.0	0.25	X005a	
CS 19-08 ho1S **CS 19-12 ho1S**	800 1200	19	29	160	500	0.85	27.0	125	1.0	0.25	X011b	X007a **TO-220ABFP** Weight = 2
CS 19-08 ho1C **CS 19-12 ho1C**	800 1200	13	35	100	500	0.87	29	125	1.7	0.6	X010a	
CS 20-12 io1 **CS 20-14 io1** **CS 20-16 io1**	1200 1400 1600	19	30	200	1000	1.1	40	125	0.62	0.2	X014a	X010a **ISOPLUS220™** Weight = 2 g
CS 20-22 moF1	2200	18		200	2500			125	0.92	0.15	X024c	
CS 22-08 io1M **CS 22-12 io1M**	800 1200	22	30	300	500	0.9	18	150	2.5	0.5	X007A	
CS 23-08 io2 **CS 23-12 io2** **CS 23-16 io2**	800 1200 1600	25	50	450	1000	1.0	10	125	1.0	0.6	X209	X011b **TO-263AB** Weight = 2 g
CS 29-08 io1C **CS 29-12 io1C**	800 1200	23 T_C = 95°C	35	200	1000	0.82	16.5	150	1.2	0.6	X010a	
CS 30-12 io1 **CS 30-14 io1** **CS 30-16 io1**	1200 1400 1600	31	49	300	1000	0.9	15	125	0.62	0.2	X014a	X014a **TO-247 AD** Weight = 6 g
CS 35-08 io4 **CS 35-12 io4** **CS 35-14 io4**	800 1200 1400	63	120	1200	1000	0.85	3.5	125	0.4	0.2	X210	
CS 45-08 io1 **CS 45-12 io1** **CS 45-16 io1**	800 1200 1600	48 T_C = 75 °C	75	520	1000	0.85	11	140	0.62	0.2	X014a	X016a **ISOPLUS247™** Weight = 5 g
CS 45-16 io1R ①	1600										X016a	
➤ **CLA 50E1200HB** ➤ **CLA 50E1200TC**	1200	50 T_C = 125°C	75	550	1000	0.92	7.8	150	0.4	0.25	X014a X019	
CS 60-12 io1 **CS 60-14 io1** **CS 60-16 io1**	1200 1400 1600	48 T_C = 105°C	75	1500	1000	0.85	3.7	140	0.32	0.15	X015	X019 **TO-268 AA** Weight = 5 g
FCC 21-12 io	1200	21 T_C = 90°C	-	300	1000	-	-	125	1.00	0.32	X024a	

① isolated 2500 V_{RMS}

X208 **TO-64** Weight = 6 g

M 5

X209 **TO-208 AA (TO-48)** Weight = 12 g

M 6

X210 **TO-208 AC (TO-65)** Weight = 20 g

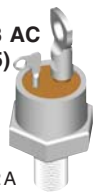

1/4"-28 UNF-2 A

X024c **ISOPLUS i4-PAC™** Weight = 6 g

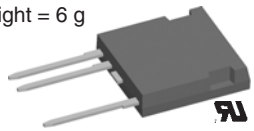

X024a **ISOPLUS i4-PAC™** Weight = 6 g

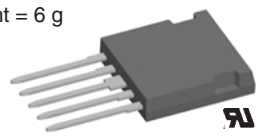

Data according to IEC 60747 and refer to a single diode or thyristor unless otherwise stated.

Diode Modules, *Single and Dual*

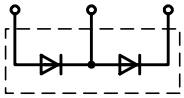

MDD

I_{FAV} = 36-224 A

Type ➤New	V_{RRM} V	I_{FAV} @ T_C A °C	I_{FRMS} A	I_{FSM} 45°C 10 ms A	V_{T0} V	r_T mΩ	T_{VJM} °C	R_{thJC} per Chip K/W	R_{thCH} per Chip K/W	Fig. No.	Package style Outline drawings on page 188 - 224
MDD 26-08N1B	800	36 100	60	650	0.8	6.1	150	1.0	0.2	X125b	X125b **TO-240 AA** Weight = 90 g 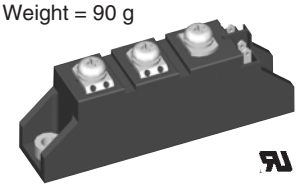
MDD 26-12N1B	1200										
MDD 26-14N1B	1400										
MDD 26-16N1B	1600										
MDD 26-18N1B	1800										
MDD 44-08N1B	800	59 100	100	1150	0.8	4.3	150	0.59	0.2		
MDD 44-12N1B	1200										
MDD 44-14N1B	1400										
MDD 44-16N1B	1600										
MDD 44-18N1B	1800										
MDD 56-08N1B	800	71 100	150	1400	0.8	3.0	150	0.51	0.2		
MDD 56-12N1B	1200										
MDD 56-14N1B	1400										
MDD 56-16N1B	1600										
MDD 56-18N1B	1800										
MDD 72-08N1B	800	99 100	180	1700	0.8	2.3	150	0.35	0.2		
MDD 72-12N1B	1200										
MDD 72-14N1B	1400										
MDD 72-16N1B	1600										
MDD 72-18N1B	1800										
MDD 95-08N1B	800	120 105	180	2800	0.75	1.95	150	0.26	0.2		
MDD 95-12N1B	1200										
MDD 95-14N1B	1400										
MDD 95-16N1B	1600										
MDD 95-18N1B	1800										
MDD 95-20N1B	2000										
MDD 95-22N1B	2200										
MDD 142-08N1	800	165 100	300	4700	0.8	1.3	150	0.21	0.1	X126a	X126a Weight 150 g
MDD 142-12N1	1200										
MDD 142-14N1	1400										
MDD 142-16N1	1600										
MDD 142-18N1	1800										
MDD 172-08N1	800	190 100	300	6600	0.8	0.8	150	0.21	0.1		
MDD 172-12N1	1200										
MDD 172-14N1	1400										
MDD 172-16N1	1600										
MDD 172-18N1	1800										
MDD 200-14N1	1400	224 100	350	10500	0.8	1.5	150	0.13	0.1		
MDD 200-16N1	1600										
MDD 200-18N1	1800										
MDD 200-22N1	2200										

Data according to IEC 60747 and refer to a single diode or thyristor unless otherwise stated.

Diode Modules, Single and Dual

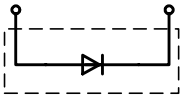
MDO

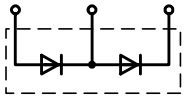
MDD

I_{FAV} = 270-950 A

Type ➤New	V_{RRM} V	I_{FAV} A	T_C °C	I_{FRMS} A	I_{FSM} 45°C 10 ms A	V_{T0} V	r_T mΩ	T_{VJM} °C	R_{thJC} per Chip K/W	R_{thCH} per Chip K/W	Fig. No.
MDD 220-08N1	800	270	100	450	8500	0.75	0.9	150	0.129	0.04	X129a
MDD 220-12N1	1200										
MDD 220-14N1	1400										
MDD 220-16N1	1600										
MDD 220-18N1	1800										
MDD 250-08N1	800	290	100	450	11000	0.75	0.75	150	0.129	0.04	
MDD 250-12N1	1200										
MDD 250-14N1	1400										
MDD 250-16N1	1600										
MDD 255-12N1	1200	270	100	450	9500	0.8	0.6	150	0.140	0.04	X131a
MDD 255-14N1	1400										
MDD 255-16N1	1600										
MDD 255-18N1	1800										
MDD 255-20N1	2000										
MDD 255-22N1	2200										
MDD 310-08N1	800	305	100	480	11500	0.75	0.63	150	0.129	0.04	X129a
MDD 310-12N1	1200										
MDD 310-14N1	1400										
MDD 310-16N1	1600										
MDD 310-18N1	1800										
MDD 310-20N1	2000										
MDD 310-22N1	2200										
MDD 312-12N1	1200	310	100	520	10500	0.8	0.6	150	0.120	0.04	X131a
MDD 312-14N1	1400										
MDD 312-16N1	1600										
MDD 312-18N1	1800										
MDD 312-20N1	2000										
MDD 312-22N1	2200										
MDD 600-12N1*	1200	600	111	1818	24000 150°C	0.75	0.2	150	0.062	0.02	X136a
MDD 600-16N1	1600										
MDD 600-18N1	1800										
MDD 600-22N1	2200										
MDO 500-12N1	1200	560	85	880	15000	0.8	0.38	140	0.072	0.024	X131b
MDO 500-14N1	1400										
MDO 500-16N1	1600										
MDO 500-18N1	1800										
MDO 500-20N1	2000										
MDO 500-22N1	2200										
➤ **MDD 950-12N1W***	1200	950	T_W = 45°C	1773	2400 150°C	0.75	0.2	150	R_{thJW} = 0.09	-	X136b
➤ **MDD 950-16N1W**	1600										
➤ **MDD 950-18N1W**	1800										
➤ **MDD 950-22N1W**	2200										

Package style

Outline drawings on page 188 - 224

X129a
Weight = 310 g

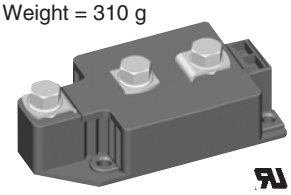

X131a
Weight = 750 g

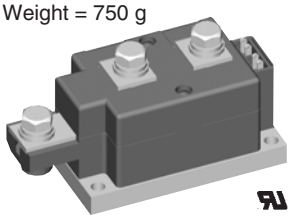

X131b
Weight = 730 g

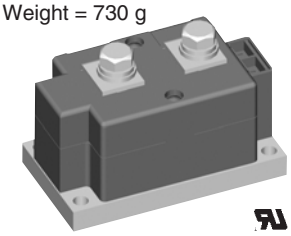

X136a
Weight = 1550 g

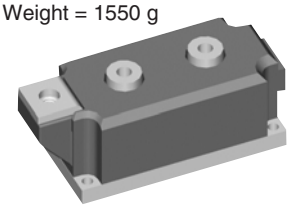

X136b
Weight = 2100 g

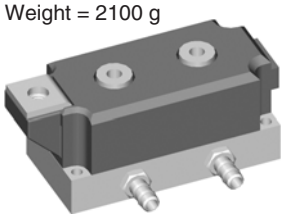

* for other configurations please contact factory

Data according to IEC 60747 and refer to a single diode or thyristor unless otherwise stated.

Thyristor / Diode Modules

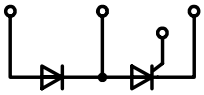

MCD...io8/...io6

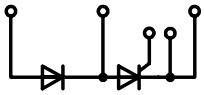

MCD...io1

I_{TAV} = 27-165 A

Type ➤ New	V_{RRM} V_{DRM} V	I_{TAV} @ T_C A °C	I_{TRMS} A	I_{TSM} 45°C 10 ms A	V_{T0} V	r_T mΩ	T_{VJM} °C	R_{thJC} per Chip K/W	R_{thCH} per Chip K/W	Fig. No.	Package style Outline drawings on page 188 - 224
MCD 26-08io1B **MCD 26-12io1B** **MCD 26-14io1B** **MCD 26-16io1B**	800 1200 1400 1600	27 85	50	520	0.85	11	125	0.88	0.2	X125b	X027a **SOT-227B** Weight = 30 g **miniBLOC**
MCD 26-08io8B **MCD 26-12io8B** **MCD 26-14io8B** **MCD 26-16io8B**	800 1200 1400 1600	27 85	50	520	0.85	11	125	0.88	0.2	X125c	
MCD 40-12io6 **MCD 40-16io6**	1200 1600	38 85	60	500	0.85	9.5	125	0.6	0.1	X027a	
MCD 44-08io1B **MCD 44-12io1B** **MCD 44-14io1B** **MCD 44-16io1B** **MCD 44-18io1B**	800 1200 1400 1200 1600	49 85	80	1150	0.85	5.3	125	0.53	0.2	X125b	X125b **TO-240 AA** Weight = 90 g
MCD 44-08io8B **MCD 44-12io8B** **MCD 44-14io8B** **MCD 44-16io8B** **MCD 44-18io8B**	800 1200 1400 1600 1800	49 85	80	1150	0.85	5.3	125	0.53	0.2	X125c	
MCD 56-08io1B **MCD 56-12io1B** **MCD 56-14io1B** **MCD 56-16io1B** **MCD 56-18io1B**	800 1200 1400 1600 1800	60 85	100	1500	0.85	3.7	125	0.45	0.2	X125b	
MCD 56-08io8B **MCD 56-12io8B** **MCD 56-14io8B** **MCD 56-16io8B** **MCD 56-18io8B**	800 1200 1400 1600 1800	60 85	100	1500	0.85	3.7	125	0.45	0.2	X125c	X125c **TO-240 AA** Weight = 90 g
MCD 72-08io1B **MCD 72-12io1B** **MCD 72-14io1B** **MCD 72-16io1B** **MCD 72-18io1B**	800 1200 1400 1600 1800	85 85	180	1700	0.85	3.2	125	0.3	0.2	X125b	
MCD 72-08io8B **MCD 72-12io8B** **MCD 72-14io8B** **MCD 72-16io8B** **MCD 72-18io8B**	800 1200 1400 1600 1800	85 85	180	1700	0.85	3.2	125	0.3	0.2	X125c	
MCD 94-20io1B **MCD 94-22io1B**	2000 2200	104 85	180	1700	0.85	3.2	125	0.22	0.2	X125b	
MCD 95-08io1B **MCD 95-12io1B** **MCD 95-14io1B** **MCD 95-16io1B** **MCD 95-18io1B**	800 1200 1400 1600 1800	116 85	180	2250	0.8	2.4	125	0.22	0.2		X126a Weight 150 g
MCD 95-08io8B **MCD 95-12io8B** **MCD 95-14io8B** **MCD 95-16io8B** **MCD 95-18io8B**	800 1200 1400 1600 1800	116 85	180	2250	0.8	2.4	125	0.22	0.2	X125c	
MCD 132-08io1 **MCD 132-12io1** **MCD 132-14io1** **MCD 132-16io1** **MCD 132-18io1**	800 1200 1400 1600 1800	130 85	300	4750	0.8	1.5	125	0.23	0.1	X126a	
MCD 161-20io1 **MCD 161-22io1**	2000 2200	165 85	300	6000	0.8	1.6	125	0.155	0.07		

Data according to IEC 60747 and refer to a single diode or thyristor unless otherwise stated.

Thyristor / Diode Modules

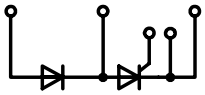

MCD...io1

I_{TAV} = 181 - 700 A

Type ➤ New	V_{RRM} V_{DRM} V	I_{TAV} @	T_C °C	I_{TRMS} A	I_{TSM} 45°C 10 ms A	V_{T0} V	r_T mΩ	T_{VJM} °C	R_{thJC} per Chip K/W	R_{thCH} per Chip K/W	Fig. No.	Package style Outline drawings on page 188 - 224
MCD 162-08io1 **MCD 162-12io1** **MCD 162-14io1** **MCD 162-16io1** **MCD 162-18io1**	800 1200 1400 1600 1800	181	85	300	6000	0.88	1.15	125	0.155	0.07	X126a	X126a Weight 150 g
MCD 200-14io1 **MCD 200-16io1** **MCD 200-18io1**	1400 1600 1800	216	85	340	8000	0.8	1.0	125	0.13	0.05		
MCD 224-20io1 **MCD 224-22io1**	2000 2200	240	85	400	8000	0.8	0.76	130	0.139	0.04	X131a	
MCD 220-08io1 **MCD 220-12io1** **MCD 220-14io1** **MCD 220-16io1**	800 1200 1400 1600	250	85	400	8500	0.9	1.0	140	0.139	0.04	X129b	X129b Weight = 750 g
MCD 225-12io1 **MCD 225-14io1** **MCD 225-16io1** **MCD 225-18io1**	1200 1400 1600 1800	221	85	400	8000	0.8	0.76	130	0.157	0.04	X131a	
MCD 250-08io1 **MCD 250-12io1** **MCD 250-14io1** **MCD 250-16io1** **MCD 250-18io1**	800 1200 1400 1600 1800	287	85	450	9000	0.85	0.82	140	0.129	0.04	X129b	X131a Weight = 750 g
MCD 255-12io1 **MCD 255-14io1** **MCD 255-16io1** **MCD 255-18io1**	1200 1400 1600 1800	250	85	450	9000	0.8	0.68	130	0.14	0.04	X131a	
MCD 310-08io1 **MCD 310-12io1** **MCD 310-14io1** **MCD 310-16io1** **MCD 310-18io1**	800 1200 1400 1600 1800	320	85	500	9200	0.8	0.82	140	0.112	0.04	X129b	
MCD 310-20io1 **MCD 310-22io1**	2000 2200	320	85	500	8000	0.8	0.82	140	0.112	0.04	X129b	X136a Weight = 1550 g
MCD 312-12io1 **MCD 312-14io1** **MCD 312-16io1** **MCD 312-18io1**	1200 1400 1600 1800	320	85	520	9200	0.8	0.68	140	0.12	0.04	X131a	
MCD 500-12io1* **MCD 500-16io1** **MCD 500-18io1**	1200 1600 1800	500	89	1294	18200 125°C	0.85	0.27	125	0.062	0.02	X136a	
MCD 500-22io1	2200	500	80	1071	15400 125°C	0.88	0.46	125	0.062	0.02		X136b Weight = 2100 g
MCD 700-12io1W* **MCD 700-16io1W** **MCD 700-18io1W**	1200 1600 1800	700	T_W = 42°C	1331	18200 125°C	0.85	0.27	125	0.062	R_{thJW} = 0.09	X136b	

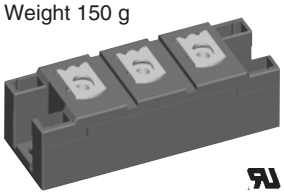

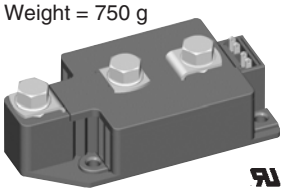

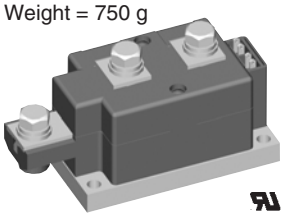

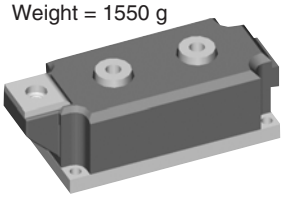

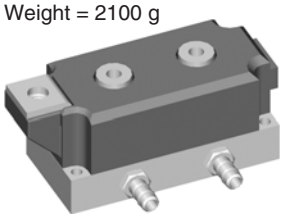

* for other configurations please contact factory

Data according to IEC 60747 and refer to a single diode or thyristor unless otherwise stated.

Thyristor Modules

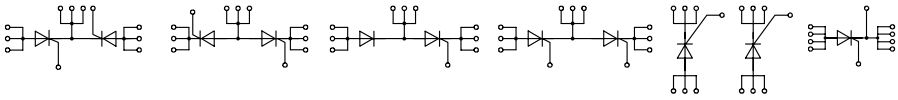

VCK VCA VCD VCC VCC 2x105 VCO

I_{TAV} = 105 - 180 A

Type ➤ New	V_{RRM} V_{DRM} V	I_{TAV} @ T_C A °C	I_{TRMS} A	I_{TSM} 45°C 10 ms A	V_{T0} V	r_T mΩ	T_{VJM} °C	R_{thJC} per Chip K/W	R_{thCH} per Chip K/W	Fig. No.	Package style Outline drawings on page 188 - 224
VCK 105-06io7	800	105 85	180	2250	0.8	2.4	125	0.26	0.2	X102	
VCK 105-12io7	1200										
VCK 105-14io7	1400										
VCK 105-16io7	1600										
VCK 105-18io7	1800										
VCA 105-06io7	800	105 85	180	2250	0.8	2.4	125	0.26	0.2		
VCA 105-12io7	1200										
VCA 105-14io7	1400										
VCA 105-16io7	1600										
VCA 105-18io7	1800										
VCD 105-06io7	800	105 85	180	2250	0.8	2.4	125	0.26	0.2		X102 **ECO-PAC 2** Weight = 24 g
VCD 105-12io7	1200										
VCD 105-14io7	1400										
VCD 105-16io7	1600										
VCD 105-18io7	1800										
VCC 105-06io7	800	105 85	180	2250	0.8	2.4	125	0.26	0.2		
VCC 105-12io7	1200										
VCC 105-14io7	1400										
VCC 105-16io7	1600										
VCC 105-18io7	1800										
VCC 2x105-06io7	800	105 85	180	2250	0.8	2.4	125	0.26	0.2		See data sheet for pin arrangement
VCC 2x105-12io7	1200										
VCC 2x105-14io7	1400										
VCC 2x105-16io7	1600										
VCC 2x105-18io7	1800										
VCO 132-08io7	800	130 85	200	3600	0.8	1.65	150	0.25	0.1		
VCO 132-12io7	1200										
VCO 132-14io7	1400										
VCO 132-16io7	1600										
VCO 132-18io7	1800										
VCO 180-08io7	800	180 90	280	4500	0.75	1.23	150	0.17	0.06		
VCO 180-12io7	1200										
VCO 180-14io7	1400										
VCO 180-16io7	1600										
VCO 180-18io7	1800										

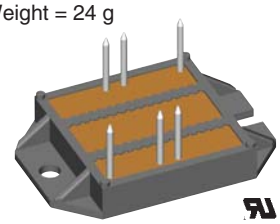

Data according to IEC 60747 and refer to a single diode or thyristor unless otherwise stated.

Thyristor Modules

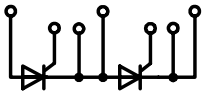

MCC...io1B

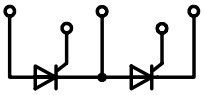

MCC...io8B

I_{TAV} = 18-116 A

Type	V_{RRM} V_{DRM} V	I_{TAV} @ A	T_C °C	I_{TRMS} A	I_{TSM} 45°C 10 ms A	V_{T0} V	r_T mΩ	T_{VJM} °C	R_{thJC} per Chip K/W	R_{thCH} per Chip K/W	Fig. No.	Package style Outline drawings on page 188 - 224
MCC 19-08io1B	800	18	85	40	400	0.85	18	125	1.3	0.2	X125b	
MCC 19-12io1B	1200											
MCC 19-14io1B	1400											
MCC 19-16io1B	1600											
MCC 19-08io8B	800	18	85	40	400	0.85	18	125	1.3	0.2	X125c	
MCC 19-12io8B	1200											
MCC 19-14io8B	1400											
MCC 19-16io8B	1600											
MCC 21-08io8B	800	21	85	33	320	0.85	15	125	1.1	0.2	X125c	
MCC 21-12io8B	1200											
MCC 21-14io8B	1400											
MCC 21-16io8B	1600											
MCC 26-08io1B	800	27	85	50	520	0.85	11	125	0.88	0.2	X125b	
MCC 26-12io1B	1200											
MCC 26-14io1B	1400											
MCC 26-16io1B	1600											
MCC 26-08io8B	800	27	85	50	520	0.85	11	125	0.88	0.2	X125c	
MCC 26-12io8B	1200											
MCC 26-14io8B	1400											
MCC 26-16io8B	1600											
MCC 44-08io1B	800	49	85	80	1150	0.85	5.3	125	0.53	0.2	X125b	
MCC 44-12io1B	1200											
MCC 44-14io1B	1400											
MCC 44-16io1B	1600											
MCC 44-18io1B	1800											
MCC 44-08io8B	800	49	85	80	1150	0.85	5.3	125	0.53	0.2	X125c	
MCC 44-12io8B	1200											
MCC 44-14io8B	1400											
MCC 44-16io8B	1600											
MCC 44-18io8B	1800											
MCC 56-08io1B	800	60	85	100	1500	0.85	3.7	125	0.45	0.2	X125b	
MCC 56-12io1B	1200											
MCC 56-14io1B	1400											
MCC 56-16io1B	1600											
MCC 56-18io1B	1800											
MCC 56-08io8B	800	60	85	100	1500	0.85	3.7	125	0.45	0.2	X125c	
MCC 56-12io8B	1200											
MCC 56-14io8B	1400											
MCC 56-16io8B	1600											
MCC 56-18io8B	1800											
MCC 72-08io1B	800	85	85	180	1700	0.85	3.2	125	0.3	0.2	X125b	
MCC 72-12io1B	1200											
MCC 72-14io1B	1400											
MCC 72-16io1B	1600											
MCC 72-18io1B	1800											
MCC 72-08io8B	800	85	85	180	1700	0.85	3.2	125	0.3	0.2	X125c	
MCC 72-12io8B	1200											
MCC 72-14io8B	1400											
MCC 72-16io8B	1600											
MCC 72-18io8B	1800											
MCC 94-20io1B	2000	104	85	180	1700	0.85	3.2	125	0.22	0.2	X125b	
MCC 94-22io1B	2200											
MCC 95-08io1B	800	116	85	180	2250	0.8	2.4	125	0.22	0.2	X125b	
MCC 95-12io1B	1200											
MCC 95-14io1B	1400											
MCC 95-16io1B	1600											
MCC 95-18io1B	1800											

X125b **TO-240 AA**
Weight = 90 g

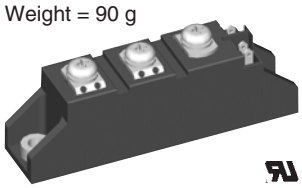

X125c **TO-240 AA**
Weight = 90 g

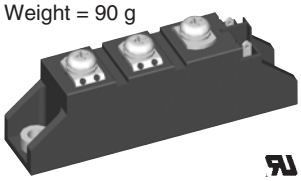

Data according to IEC 60747 and refer to a single diode or thyristor unless otherwise stated.

Thyristor Modules, *Dual*

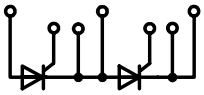

MCC...io1B

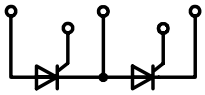

MCC...io8B

I_{TAV} = 116-700 A

Type ➤ New	V_{RRM} V_{DRM} V	I_{TAV} @	T_C °C	I_{TRMS} A	I_{TSM} 45°C 10 ms A	V_{T0} V	r_T mΩ	T_{VJM} °C	R_{thJC} per Chip K/W	R_{thCH} per Chip K/W	Fig. No.	Package style Outline drawings on page 188 - 224
MCC 95-08io8B **MCC 95-12io8B** **MCC 95-14io8B** **MCC 95-16io8B** **MCC 95-18io8B**	800 1200 1400 1600 1800	116	85	180	2250	0.8	2.4	125	0.22	0.2	X125c	X125c **TO-240 AA** Weight = 90 g
MCC 132-08io1 **MCC 132-12io1** **MCC 132-14io1** **MCC 132-16io1** **MCC 132-18io1**	800 1200 1400 1600 1800	130	85	300	4750	0.8	1.5	125	0.23	0.1	X126a	
MCC 161-20io1 **MCC 161-22io1**	2000 2200	165	85	300	6000	0.8	1.6	125	0.155	0.07		X126a Weight 150 g
MCC 162-08io1 **MCC 162-12io1** **MCC 162-14io1** **MCC 162-16io1** **MCC 162-18io1**	800 1200 1400 1600 1800	181	85	300	6000	0.88	1.15	125	0.155	0.07		
MCC 170-12io1 **MCC 170-14io1** **MCC 170-16io1** **MCC 170-18io1**	1200 1400 1600 1800	203	85	350	5400	0.8	1.0	130	0.164	0.04	X131a	
MCC 200-14io1 **MCC 200-16io1** **MCC 200-18io1**	1400 1600 1800	216	85	340	8000	0.8	1.0	125	0.13	0.05	X126a	X129b Weight = 750 g
MCC 220-08io1 **MCC 220-12io1** **MCC 220-14io1** **MCC 220-16io1** **MCC 220-18io1**	800 1200 1400 1600 1800	250	85	400	8500	0.9	1.0	140	0.139	0.04	X129b	
MCC 224-20io1 **MCC 224-22io1**	2000 2200	240	85	400	8000	0.8	0.76	130	0.139	0.04	X131a	
MCC 225-12io1 **MCC 225-14io1** **MCC 225-16io1** **MCC 225-18io1**	1200 1400 1600 1800	221	85	400	8000	0.8	0.76	130	0.157	0.04		X131a Weight = 750 g
MCC 250-08io1 **MCC 250-12io1** **MCC 250-14io1** **MCC 250-16io1** **MCC 250-18io1**	800 1200 1400 1600 1800	287	85	450	9000	0.85	0.82	140	0.129	0.04	X129b	
MCC 255-12io1 **MCC 255-14io1** **MCC 255-16io1** **MCC 255-18io1**	1200 1400 1600 1800	250	85	450	9000	0.8	0.68	130	0.14	0.04	X131a	
MCC 310-08io1 **MCC 310-12io1** **MCC 310-14io1** **MCC 310-16io1** **MCC 310-18io1**	800 1200 1400 1600 1800	320	85	500	9200	0.8	0.82	140	0.112	0.04	X129b	X136a Weight = 1550 g
MCC 312-12io1 **MCC 312-14io1** **MCC 312-16io1** **MCC 312-18io1**	1200 1400 1600 1800	320	85	520	9200	0.8	0.68	140	0.12	0.04	X131a	
MCC 500-12io1* **MCC 500-14io1** **MCC 500-16io1** **MCC 500-18io1**	1200 1400 1600 1800	500	89	785	18200 125°C	0.85	0.27	125	0.062	0.02	X136a	X136b Weight = 2100 g
MCC 500-22io1*	2200	500	80	1071	15400 125°C	0.88	0.46	125	0.062	0.02		
MCC 700-12io1W **MCC 700-16io1W** **MCC 700-18io1W**	1200 1600 1800	700	T_W = 42°C	1331	18200 125°C	0.85	0.27	125	0.062	R_{thJW} = 0.09	X136b	

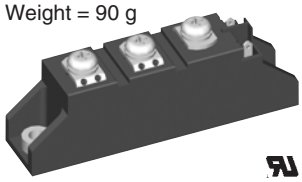

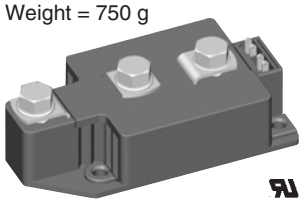

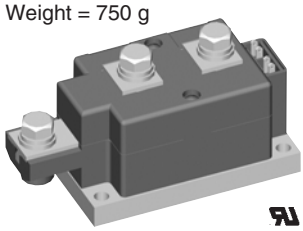

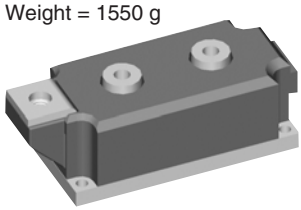

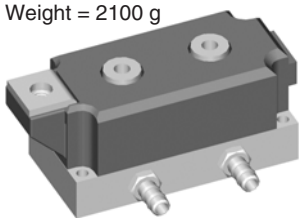

* for other configurations please contact factory

Thyristor Modules, *Single*

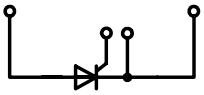

MCO

I_{TAV} = 31-600 A

Type ➤ New	V_{RRM} V_{DRM} V	I_{TAV} A	T_C °C	I_{TRMS} A	I_{TSM} 45°C 10 ms A	V_{T0} V	r_T mΩ	T_{VJM} °C	R_{thJC} per Chip K/W	R_{thCH} per Chip K/W	Fig. No.	Package style Outline drawings on page 188 - 224
MCO 25-12io6 **MCO 25-16io6**	1200 1600	31	80	49	370	0.85	14	150	1.1	0.5	X027a	X027a **SOT-227B** Weight = 30 g **miniBLOC**
MCO 50-12io6 **MCO 50-16io6**	1200 1600	54	80	85	740	0.9	5.8	150	0.72	0.4		
➤ **MCO 75-12io6** ➤ **MCO 75-16io6**	1200 1600	77	80	121	1070	0.85	5.5	150	0.45	0.2		
MCO 100-12io6 **MCO 100-16io6**	1200 1600	99	80	156	1400	0.85	4.5	150	0.35	0.15		
MCO 150-12io1 **MCO 150-16io1**	1200 1600	149	80	234	2000	0.8	3.8	150	0.2	0.1		
MCO 450-20io1 **MCO 450-22io1**	2000 2200	464	85	750	15000	0.77	0.42	130	0.072	0.024	X131b	X131b Weight = 730 g
MCO 500-12io1 **MCO 500-14io1** **MCO 500-16io1** **MCO 500-18io1**	1200 1400 1600 1800	560	85	880	17000	0.8	0.38	140	0.072	0.024		
MCO 600-16io1 **MCO 600-18io1** **MCO 600-20io1** **MCO 600-22io1**	1600 1800 2000 2200	600	85	928	15000	0.77	0.42	140	0.065	0.02		

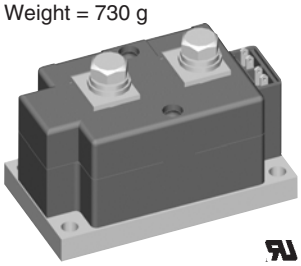

Data according to IEC 60747 and refer to a single diode or thyristor unless otherwise stated.

Optional Accessories for Thyristor / Diode Modules

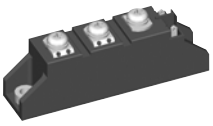

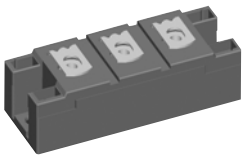

For module-types MCC 19, 26, 44, 56, 60, 72, 94 and 95 version 1:
Keyed Gate Cathode twin plugs with wire length = 350 mm;
gate = yellow, cathode = red

Type **ZY 200 L** (L = Left for pin pair 4/5)
Type **ZY 200 R** (R = Right for pin pair 6/7)

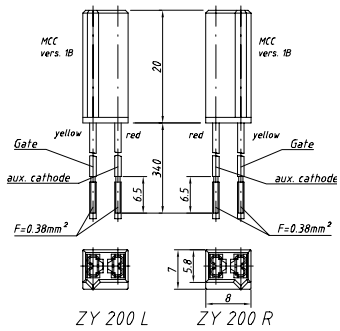

For ZY 180 and ZY 200: UL Styles 1385

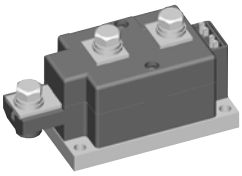

For module types MCC/MCD/MCO 122, 132, 161, 162, 170, 200, 220, 224, 225, 250, 255, 310, 312, 500 and MII 400 (for MCD/MCO only L-type):
Keyed Gate Cathode twin plugs
with wire length = 350 mm
gate = yellow, cathode = red

Type **ZY 180 L** (L = Left for pin pair 4/5)
Type **ZY 180 R** (R = Right for pin pair 6/7)

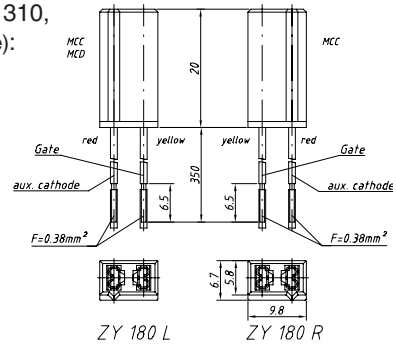

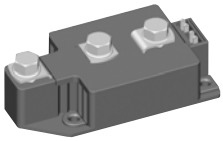

For module types
MCC/MCD/MDD 220, 250, 310
Threaded spacer for higher Anode / Cathode construction:

Type **ZY 250** (material brass)

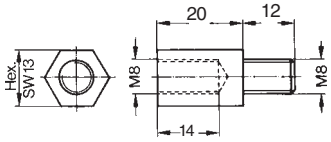

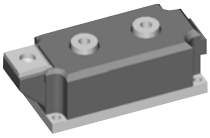

Design Information

For Thyristors, Diodes, Thyristor / Diode Modules and Rectifier Bridges

Surge current

The 60 Hz value of I_{TSM} is 10 % higher than the 50 Hz value
The I_{TSM} value at T_{VJM} is 10 to 15 % lower than the 45°C value

Limiting I^2t

50 Hz: I^2t (in A^2s) = I_{TSM} (A) • I_{TSM} (A) • 0.005 (s); use rated I_{TSM} value (10 ms)
60 Hz: I^2t (in A^2s) = I_{TSM} (A) • I_{TSM} (A) • 0.0042 (s); use 60-Hz-value of I_{TSM}

Forward current

The average current ratings in tables are mostly specified for temperature conditions of: T_A = 45°C, T_C = 85°C or T_C = 100°C.
For other temperature conditions, the current ratings can be calculated using the following formulas, applicable up to 400 Hz.

$$I_{TAV} = \frac{-V_{T0} + \sqrt{V_{T0}^2 + 4 \bullet k^2 \bullet r_T \bullet P}}{2 \bullet k^2 \bullet r_T} \quad \text{where} \quad P = \frac{T_{VJM} - T_C}{R_{thJC}} \quad \text{or} \quad P = \frac{T_{VJM} - T_A}{R_{thJA}}$$

I_{TAV} (A), P (W); V_{TO} (V); r_T (Ω), T_{VJM} (°C), T_C (°C), T_A (°C)
R_{thJC} (K/W), R_{thJA} (K/W)

k^2 = 1 for DC current
k^2 = 2.5 for sinusoidal half wave current
k^2 = 3.0 for 120° rectangular current
k^2 = 6.0 for 60° rectangular current

The average forward current is limited by the RMS current value I_{TRMS}. When the **calculated** value I_{TAV} is higher than I_{TRMS}/ k, replace it by I_{TAV} = I_{TRMS}/k.

Rectifier Bridges for Power Factor Correction

Power Stage for Boost Converters (Power Factor Correction)

1-phase PFC

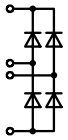
A)
1~ Bridge

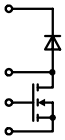
B)
MOSFET Boost

C)
MOS+HyperDyn

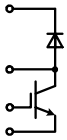
D)
IGBT Boost

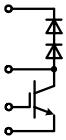
E)
IGBT+HiperDyn

	Type ➤ New	Circuit	$V_{DSS\,max}$ V	I_D T_C = 25 °C A	$R_{DS(on)}$ max. Ω	V_{RRM} Boost Diode V	V_{RRM} Rectifier Diodes V	Fig. No.
MOSFET	➤ IXFN 64N50PD2	B	500	52	0.086	600	-	X027a
	FMD 21-05QC	C	500	21	0.22	600	-	X024a
	➤ FMD 25-06KC5	C, CoolMOS**	600	25	0.10	600	-	X024a
	➤ FMD 25-06KCSiC	C, CoolMOS**	600	25	0.10	600	-	X024a
	FMD 40-06KC	C, CoolMOS**	600	38	0.07	600	-	X024a
	➤ FMD 40-06KC5	C, CoolMOS**	600	47	0.045	600	-	X024a
	VUM 24-05N	A + B	500	35	0.12	600	800	X105b
	VUM 33-05N	A + B	500	47	0.12	600	800	X105b

	Type ➤ New	Circuit	$V_{CES\,max}$ V	I_C T_C = 25°C A	$V_{CE(sat)}$ @ I_C V	A	V_{RRM} Boost Diode V	V_{RRM} Rectifier Diodes V	
IGBT	FID 35-06C	E	600	38	1.9	25	600	-	X024a
	FID 36-06D	D	600	38	1.9	25	600	-	X024a
	FID 60-06D	D	600	65	1.6	30	600	-	X024a
	VUI 9-06N7	A + D	600	37	1.8	10	600	1200	X101

	Type ➤ New	Circuit	V_{RRM} V	$I_{D(AV)}$ @ T_C	
Rect.	FBO 16-12N *	A	1200	22 A @ 90 °C	X024a
	FBO 40-12N *	A	1200	40 A @ 90 °C	X024a

* Recommended in combination with types FMD and FID

** COOLMOS Power Semiconductors

CoolMOS™ is a trademark of Infineon Technologies

Package style
Outline drawings on page 188 - 224

X024a **ISOPLUS i4-PAC™**
Weight = 6 g

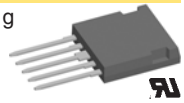

X027a **SOT-227B miniBLOC**
Weight = 30 g

X101 **ECO-PAC 1**
Weight = 19 g

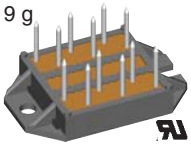

See data sheet for pin arrangement

X105b
Weight = 28 g

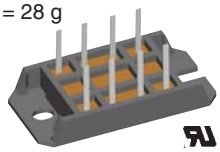

3-phase PFC

"Vienna Rectifier" circuit

- wide input voltage range
- sinusoidal mains input currents in phase with mains
- boost converter operation:
  - input: three phase AC mains without neutral conductor
  - output: stabilized DC link with center point
- one module used per phase

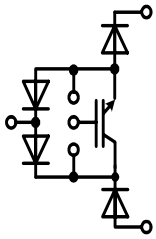
VUI 30

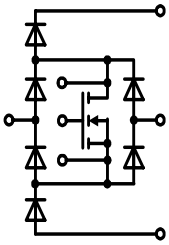
VUM 25

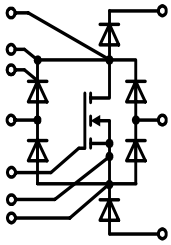
VUM 85

For further information on this circuit please visit IXYS website http://www.ixys.com

Type ➤ New	P_N / kW 3 ~ 400 V T_C = 80 °C	Configuration	Fig. No.	Package style Outline drawings on pages 188 - 224
VUM 25-05E	10	Vienna rectifier current	X103	X103 Weight = 35 g
VUM 85-05A	30	Vienna rectifier current	X104	X104 V2-Package Weight = 80 g
VUI 30-12N1	15	IGBT stage for buck @ boost PWM converter	X103	

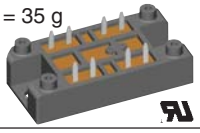

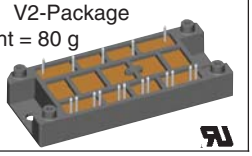

Data according to IEC 60747 and refer to a single diode or thyristor unless otherwise stated.

MOS / IGBT AC switch

- Fast AC switch
- Easy to turn-off like a MOSFET or IGBT
- Applications
  - lighting control
  - AC motor control
  - matrix inverter

Type ➤ New	Configuration	BV voltage ±	Rated current A T_C = 25 °C	Circuit	Fig. No.	Package style Outline drawings on page 188 - 224
VMK 165-007T	MOSFET in common source	70	165	A	X125b	X005a **TO-220AB** Weight = 2 g
FMK 75-01F	MOSFET in common source	100	75	B	X024a	
VMK 90-02T2	MOSFET in common source	200	83	A	X125b	
➤ **IXRP 15N120**	single RIGBT ①	1200	25	D	X005a	
IXRH 40N120	single RIGBT ①	1200	55	D	X014a	X014a **TO-247 AD** Weight = 6 g
➤ **IXRR 40N120**	single RIGBT ①	1200	45	D	X016a	
FIO 50-12BD	IGBT and Diode Bridge	1200	50	C	X024a	

preliminary data, typical values
① Single IGBT die with reverse blocking capability

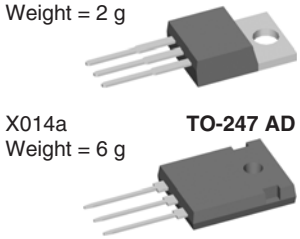

X016a **ISOPLUS247™** Weight = 5 g

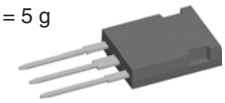

A

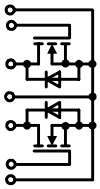

B

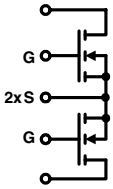

C

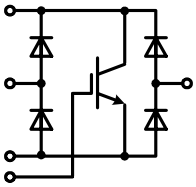

D

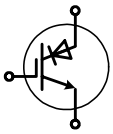

X024a **ISOPLUS i4-PAC™** Weight = 6 g

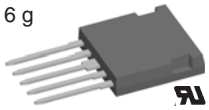

X125b **TO-240 AA** Weight = 90 g

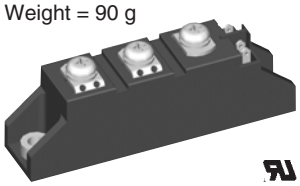

Module with HiPerFET™ H-Bridge and Single Phase Mains Rectifier Bridge

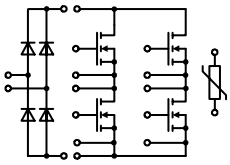

Type ➤ New	V_{DSS} V	I_D A T_C = 25°C	I_D A T_C = 80°C	$R_{DSon(max)}$ mΩ T_C = 25°C	V_{DRM} V rectifier diode	I_{DAVM} @ T_C A		Package style Outline drawings on page 188 - 224
VBH 40-05B	500	40	30	116	1200	33	80	X104 V2-Package Weight = 80 g

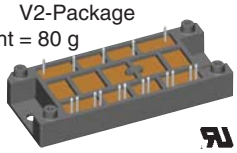

3~ Rectifier Bridges

with IGBT and Diode for Brake Unit

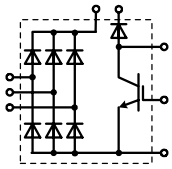

VUB...

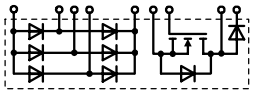

VUBM...

Type ➤ New	Rectifier V_{RRM} V	Rectifier I_{dAV} @ T_C A	Rectifier I_{dAV} @ T_C °C	IGBT V_{CES} V	IGBT $I_{C\,80}$ A	fast Diode V_{RRM} V	fast Diode $I_{F(AV)}$ A	fast Diode t_{rr} ns	Fig. No.	Package style Outline drawings on page 188 - 224
VUB 33-06P1 VUBM 33-05P1	600 500	22 48	90 100	600 500	33 36/MOSFET	600 600	24 30	30 30	X102	X102 ECO-PAC 2 Weight = 24 g
VUB 50-12PO1 VUB 50-16PO1	1200 1600	56	100	1200	14	1200	10	110	X102	
VUB 72-12NO1 VUB 72-16NO1	1200 1600	110	80	1200	35	1200	15	130	X103	
VUB 116-16NO1	1600	116	100	1200	67	1200	27	40	X112	
VUB 120-12NO2 VUB 120-16NO2	1200 1600	188	80	1200	100	1200	34	40	X104	
➤ VUB 135-22NO1	2200	135	100	1700	50	1800	50	40	X112	
VUB 145-16NO1	1600	145	100	1200	100	1200	27	40		
VUB 160-12NO2 VUB 160-16NO2	1200 1600	188	80	1200	125	1200	34	40	X104	

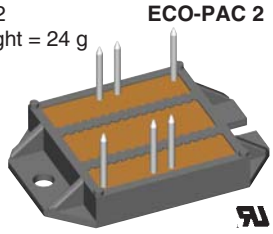

See data sheet for pin arrangement

X103
Weight = 35 g

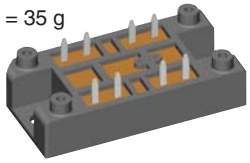

X104 V2-Package
Weight = 80 g

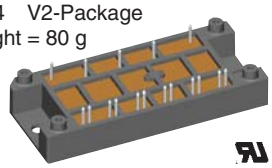

X112
Weight = 180 g

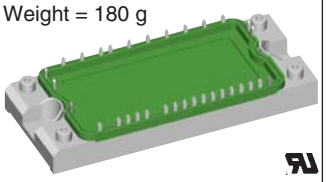

3~ Half Controlled Rectifier Bridges

with IGBT and Diode for Brake Unit

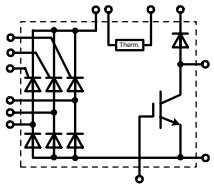

Type	Rectifier V_{RRM} V	Rectifier I_{dAV} @ T_C A	Rectifier I_{dAV} @ T_C °C	IGBT V_{CES} V	IGBT $I_{C\,80}$ A	fast Diode V_{RRM} V	fast Diode $I_{F(AV)}$ A	fast Diode t_{rr} ns	
VVZB 120-12io2 VVZB 120-16io2	1200 1600	120	80	1200	100	1200	27	40	X104
VVZB 135-16NO1	1600	135	85	1200	67	1200	27	40	X112
VVZB 170-16NO1	1600	170	85	1200	100	1200	27	40	X112

Data according to IEC 60747 and refer to a single diode or thyristor unless otherwise stated.

Rectifier Bridges with Fast Diodes

Rectifier Bridges with **Superfast Recovery Diodes**

1-phase, B2U

Type ➤ New	V_{RRM} V	I_{dAV} @ T_C A	°C	I_{FSM} 45°C 10 ms A	V_{T0} V	r_T mΩ	T_{VJM} °C	R_{thJC} per Chip K/W	$R_{thCH\,typ}$ per Chip K/W	Fig. No.
VBE 17-06NO7	600	27	85	50	1.18	22.0	150	2.5	0.3	X101
VBE 17-12NO7	1200	19	85	40	1.32	30.0	150	2.5	0.3	
VBE 20-20NO1	2000	20	65	75	3.30	93.0	150	1.7	0.3	X103
VBE 26-06NO7	600	44	85	110	1.13	13.0	150	1.6	0.3	X101
VBE 26-12NO7	1200	32	85	90	1.32	30.0	150	1.6	0.3	
VBE 55-06NO7	600	68	100	250	0.98	8.0	150	0.9	0.3	
VBE 55-12NO7	1200	59	85	200	1.31	15.0	150	0.9	0.3	
VBE 60-06A	600	60	90	250	0.98	6.8	150	1.15	0.1	X027a
FBE 22-06N1	600	20	90	40	-	-	150	3.5	0.15	X024a
VBE 100-06N07	600	100	85	600	1.09	4.3	150	0.8	0.2	X102
VBE 100-12N07	1200	100	70	500	1.07	8.2	150	0.8	0.2	
FBS 10-06SC*	600	6.6	90	12	-	-	175	8.0	3.5	X024a
FBS 16-06SC*	600	11	90	20	-	-	175	5.6	3.0	

* SiC-Diodes

3-phase, B6U

FUS 45-0045B	45	20	90	150	-	-	150	3.1	0.15	X024a
VUE 50-12NO1	1200	50	85	200	1.65	18.2	150	1.2	0.3	X103
VUE 30-20NO1	2000	30	65	75	3.30	93.0	150	1.7	0.3	
VUE 22-06NO7	600	34	85	50	1.18	22.0	150	2.50	0.3	X101
VUE 22-12NO7	1200	24	85	40	1.39	55.0	150	2.50	0.3	
VUE 35-06NO7	600	56	85	110	1.13	13.0	150	1.60	0.3	
VUE 35-12NO7	1200	40	85	90	1.32	30.0	150	1.60	0.3	
VUE 75-06NO7	600	86	100	250	0.98	8.0	150	0.90	0.3	
VUE 75-12NO7	1200	74	85	200	1.31	15.0	150	0.90	0.3	
FUE 30-12N1	1200	30	90	80	-	-	150	2.3	0.15	X024a
VUE 130-06NO7	600	130	85	600	1.09	4.3	150	0.8	0.2	X102
VUE 130-12NO7	1200	130	70	500	1.07	8.2	150	0.8	0.2	

Rectifier Bridges with **Semifast Diodes**

3-phase, B6U, t_{rr} = 1.5 µs

VUO 18-12DT8*	1200	18	63	300	1.2	16	150	9.3	0.9	X116b
VUO 18-14DT8*	1400									
VUO 18-16DT8*	1600									

* not recommended for new design

Package style

Outline drawings on page 188 - 224

X024a **ISOPLUS i4-PAC™**
Weight = 6 g

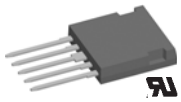

X027a **SOT-227B miniBLOC**
Weight = 30 g

X101 **ECO-PAC 1**
Weight = 19 g

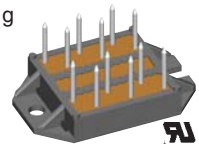

See data sheet for pin arrangement

X102 **ECO-PAC 2**
Weight = 24 g

See data sheet for pin arrangement

X103
Weight = 35 g

X116b
Weight = 22 g

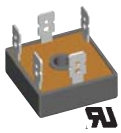

Rectifier Bridges incorporating Fast Diodes

Power switching semiconductors are used in inverter systems with DC-Link. Due to high switching frequencies, harmonics and line distortion may be generated. It is important that the new designs reduce these influences and fulfill the EMI filtering requirements according to EMI/EMC VDE 0871 and other.

The noise level can be reduced by up to **10dB** when the input rectifier is equipped with Semi-fast diodes and is therefore optimised for turn off; resulting in a lower peak recovery current compared to non-optimised and normal rectifier diodes.

The noise level can be further reduced approximetely by another **5dB** when using rectifier bridges equipped with Fast Recovery Epitaxial Diodes (FRED) like module types VBE (single phase bridge) or VUE (three phase bridge). However these are more expensive but may be necessary in some applications to fulfill the VDE or other standards.

This behaviour has a direct influence on the design of the EMI filter networks with its capacitors and inductors of which the size and costs can be reduced.

More detailed information is available in the IXYS application note D98005E "Input Rectifiers with Semi-fast Diodes for DC Link“ on www.ixys.com.

1~ Rectifier Bridges

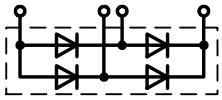

1~ Rectifier Bridges with Avalanche Diodes, B2U

Type ➤ New	V_{RRM} V	V_{vRMS} V	I_{dAV} A	@ T_C °C	I_{FSM} 45°C 10 ms A	V_{T0} V	r_T mΩ	T_{VJM} °C	R_{thJC} per Chip K/W	R_{thJH} per Chip K/W	P_{RSM} kW	Fig. No.
VBO 13-12AO2	1200	400	18	85	220	0.85	17	150	5.6	6.0	2.5	X115
VBO 13-14AO2	1400	500										
VBO 13-16AO2	1600	500										
VBO 20-12AO2	1200	400	31	85	300	0.85	14	150	3.0	3.4	3.4	
VBO 20-14AO2	1400	440										
VBO 20-16AO2	1600	500										
VBO 25-12AO2	1200	400	38	85	370	0.85	8	150	2.8	3.2	3.4	
VBO 25-14AO2	1400	440										
VBO 25-16AO2	1600	500										

1~ Rectifier Bridges with Standard Diodes, B2U

VBO 13-08NO2	800	250	18	85	220	0.85	17	150	5.6	6.0	-	X115
VBO 13-12NO2	1200	400										
VBO 13-14NO2	1200	400										
VBO 13-16NO2	1600	500										
FBO 16-12N	1200	400	22	90	100	0.83	28	150	4.0	5.0	-	X024a
VBO 19-08NO7	800	250	21	100	100	0.8	40	150	2.3	2.8	-	X100
VBO 19-12NO7	1200	400										
VBO 20-08NO2	800	250	31	85	300	0.85	14	150	3.0	3.4	-	X115
VBO 20-12NO2	1200	400										
VBO 20-14NO2	1400	440										
VBO 20-16NO2	1600	500										
VBO 21-08NO7	800	250	21	100	100	0.8	40	150	2.3	2.8		X101
VBO 21-12NO7	1200	400										
VBO 22-08NO8	800	250	17	85	380	0.85	12	150	8.2	9.4	-	X116b
VBO 22-12NO8	1200	400										
VBO 22-14NO8	1400	440										
VBO 22-16NO8	1600	500										
VBO 22-18NO8	1800	575										
GBO 25-12NO1	1200	400	25	80	370	0.89	12.2	150	4.3	4.8	-	X025
GBO 25-16NO1	1600	500										
VBO 25-08NO2	800	250	38	85	370	0.85	8	150	2.8	3.2	-	X115
VBO 25-12NO2	1200	400										
VBO 25-14NO2	1400	440										
VBO 25-16NO2	1600	500										
VBO 30-08NO7	800	250	35	85	400	0.85	12	150	2.8	3.4	-	X119
VBO 30-12NO7	1200	400										
VBO 30-14NO7	1400	440										
VBO 30-16NO7	1600	500										
VBO 30-18NO7	1800	575										
VBO 36-08NO8	800	250	23	85	550	0.8	5.8	150	6.2	7.4	-	X116b
VBO 36-12NO8	1200	400										
VBO 36-14NO8	1400	440										
VBO 36-16NO8	1600	500										
VBO 36-18NO8	1800	575										
FBO 40-12N	1200	400	40	90	250	0.83	10	150	2.3	2.9	-	X024a
VBO 40-08NO6	800	250	40	100	300	0.8	13	150	1.7	2.0	-	X027a
VBO 40-12NO6	1200	400										
VBO 40-16NO6	1600	500										
VBO 45-08NO7	800	250	45	100	550	0.8	8	150	1.45	1.9	-	X118a
VBO 45-12NO7	1200	400										
VBO 45-14NO7	1400	440										
VBO 45-16NO7	1600	500										
VBO 45-18NO7	1800	575										

Package style

Outline drawings on page 188 - 224

X024a
ISOPLUS i4-PAC™
Weight = 6 g

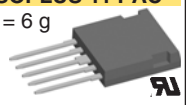

X025
Weight = 7 g

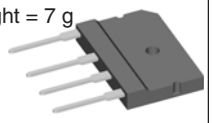

X027a **SOT-227B**
Weight = 30 g **miniBLOC**

X100 **Slim-PAC**
Weight = 17 g

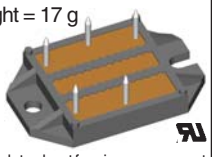

See data sheet for pin arrangement

X101 **ECO-PAC 1**
Weight = 19 g

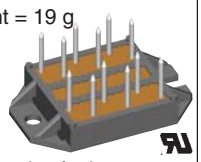

See data sheet for pin arrangement

X115
Weight = 15 g

X116b
Weight = 22 g

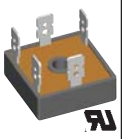

X118a
Weight = 100 g

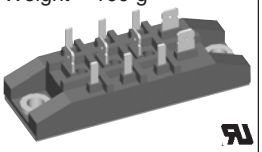

X119
Weight = 135 g

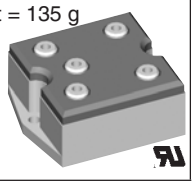

Data according to IEC 60747 and refer to a single diode or thyristor unless otherwise stated.

1~ Rectifier Bridges

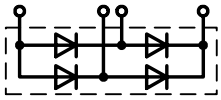

1~ Rectifier Bridges with Standard Diodes, B2U

Type ➤ New	V_{RRM} V	V_{vRMS} V	I_{dAV} @ T_C A	°C	I_{FSM} 45°C 10 ms A	V_{T0} V	r_T mΩ	T_{VJM} °C	R_{thJC} per Chip K/W	R_{thJH} per Chip K/W	Fig. No.
VBO 50-08NO7	800	250	50	64	750	0.85	8	150	2.6	2.84	X119
VBO 50-12NO7	1200	400									
VBO 50-14NO7	1400	440									
VBO 50-16NO7	1600	500									
VBO 50-18NO7	1800	575									
VBO 52-08NO7	800	250	52	100	550	0.8	8	150	1.45	1.87	X122
VBO 52-12NO7	1200	400									
VBO 52-14NO7	1400	440									
VBO 52-16NO7	1600	500									
VBO 52-18NO7	1800	575									
VBO 54-08NO7	800	250	54	100	300	0.8	13	150	1.1	1.6	X101
VBO 54-12NO7	1200	400									
VBO 54-14NO7	1400	440									
VBO 54-16NO7	1600	500									
VBO 55-08NO7	800	250	55	100	750	0.8	6	150	1.3	1.6	X118a
VBO 55-12NO7	1200	400									
VBO 55-14NO7	1400	440									
VBO 55-16NO7	1600	500									
VBO 55-18NO7	1800	575									
VBO 65-08NO7	800	250	65	100	1000	0.8	5	150	1.12	1.5	X118a
VBO 65-12NO7	1200	400									
VBO 65-14NO7	1400	440									
VBO 65-16NO7	1600	500									
VBO 65-18NO7	1800	575									
VBO 68-08NO7	800	250	68	90	530	0.8	7.5	150	1.2	1.5	X101
VBO 68-12NO7	1200	400									
VBO 68-14NO7	1400	440									
VBO 68-16NO7	1600	500									
VBO 72-08NO7	800	250	72	100	750	0.8	5	150	1.1	1.52	X122
VBO 72-12NO7	1200	400									
VBO 72-14NO7	1400	440									
VBO 72-16NO7	1600	500									
VBO 72-18NO7	1800	575									
VBO 78-08NO7	800	250	78	100	750	0.8	6	150	1.2	1.5	X102
VBO 78-12NO7	1200	400									
VBO 78-14NO7	1400	440									
VBO 78-16NO7	1600	500									
VBO 78-18NO7	1800	575									
VBO 88-08NO7	800	250	92	100	900	0.8	4	150	0.85	1.15	X102
VBO 88-12NO7	1200	400									
VBO 88-14NO7	1400	440									
VBO 88-16NO7	1600	500									
VBO 88-18NO7	1800	575									
VBO 105-08NO7	800	250	107	85	1500	0.8	5	150	0.83	1.13	X121
VBO 105-12NO7	1200	400									
VBO 105-14NO7	1400	440									
VBO 105-16NO7	1600	500									
VBO 105-18NO7	1800	575									
VBO 125-08NO7	800	250	124	85	1800	0.8	3	150	0.83	1.13	X121
VBO 125-12NO7	1200	400									
VBO 125-14NO7	1400	440									
VBO 125-16NO7	1600	500									
VBO 125-18NO7	1800	575									
VBO 130-08NO7	800	250	122	100	1800	0.8	3	150	0.65	0.83	X123a
VBO 130-12NO7	1200	400									
VBO 130-14NO7	1400	440									
VBO 130-16NO7	1600	500									
VBO 130-18NO7	1800	575									
VBO 160-08NO7	800	250	174	100	2800	0.8	2.2	150	0.45	0.6	X123a
VBO 160-12NO7	1200	400									
VBO 160-14NO7	1400	440									
VBO 160-16NO7	1600	500									
VBO 160-18NO7	1800	575									

Package style

Outline drawings on page 188 - 224

Fig. 51
Weight = 260 g

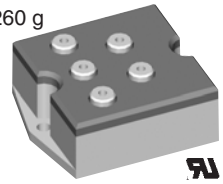

X101 **ECO-PAC 1**
Weight = 19 g

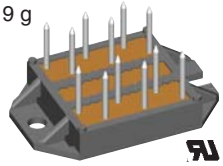

See data sheet for pin arrangement

X102 **ECO-PAC 2**
Weight = 24 g

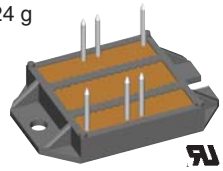

See data sheet for pin arrangement

X118a
Weight = 100 g

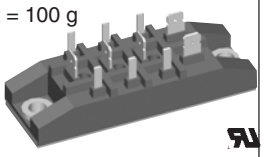

X121
Weight = 225 g

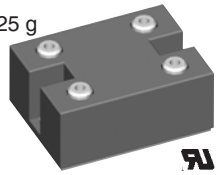

X122
Weight = 160 g

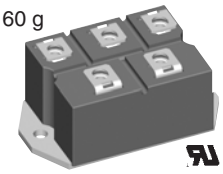

X123a
Weight = 300 g

Data according to IEC 60747 and refer to a single diode or thyristor unless otherwise stated.

1~ Rectifier Bridges

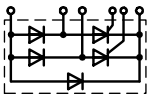
VHF

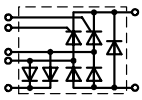
VHFD

1~ Half Controlled Rectifier Bridges with free wheeling diode, B2HKF

Type	V_{RRM} V	V_{vRMS} V	I_{dAV} A	@ T_H °C	I_{FSM} 45°C A	V_{T0} V	r_T mΩ	T_{VJM} °C	R_{thJC} per Chip K/W	R_{thJH} per Chip K/W	Fig. No.	Package style Outline drawings on page 188 - 224
VHF 15-08io5	800	250	15	85	190	1.0	40	125	2.4	3.0	X117a	X101 **ECO-PAC 1** Weight = 19 g
VHF 15-12io5	1200	400										
VHF 15-14io5	1400	440										
VHF 15-16io5	1600	500										
VHF 25-06io7	600	125	32		200	0.85	27	125	1.3	1.8	X101	
VHF 25-08io7	800	250	T_C = 85°C									
VHF 25-12io7	1200	400										
VHF 28-08io5	800	250	28	85	300	0.9	15	125	1.4	2.0	X117a	
VHF 28-12io5	1200	400										
VHF 28-14io5	1400	440										
VHF 28-16io5	1600	500										
VHF 36-08io5	800	250	36	85	320	0.85	13	125	1.15	1.55	X117a	
VHF 36-12io5	1200	400										
VHF 36-14io5	1400	440										
VHF 36-16io5	1600	500										
VHF 55-08io7	800	250	53	85	550	0.85	11	125	0.9	1.1	X118a	
VHF 55-12io7	1200	400										
VHF 55-14io7	1400	440										
VHF 55-16io7	1600	500										
VHF 85-12io7	1200	400	82	85	1150	0.85	6	125	0.65	0.8	X123a	
VHF 85-14io7	1400	440										
VHF 125-12io7	1200	400	123	85	1500	0.85	3.5	125	0.46	0.55	X123a	
VHF 125-14io7	1400	440										
VHF 125-16io7	1600	500										
VHFD 16-08io1	800	250	16	85	150	1.0	40	125	2.4	3.0	X103	
VHFD 16-12io1	1200	400										
VHFD 16-14io1	1400	440										
VHFD 16-16io1	1600	500										
VHFD 29-08io1	800	250	28	85	300	0.9	15	125	1.4	2.0	X103	
VHFD 29-12io1	1200	400										
VHFD 29-14io1	1400	440										
VHFD 29-16io1	1600	500										
VHFD 37-08io1	800	250	36	85	320	0.85	13	125	1.2	1.55	X103	
VHFD 37-12io1	1200	400										
VHFD 37-14io1	1400	440										
VHFD 37-16io1	1600	500										

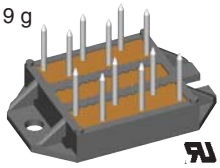
See data sheet for pin arrangement

X103
Weight = 35 g

X117a
Weight = 50 g

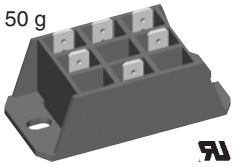

X118a
Weight = 100 g

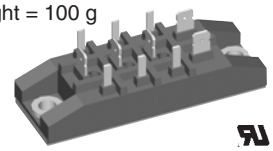

X123a
Weight = 300 g

Data according to IEC 60747 and refer to a single diode or thyristor unless otherwise stated.

1~ Rectifier Bridges

1~Half Controlled Rectifier Bridge, B2HK

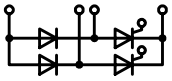

Type	V_{RRM} V	V_{vRMS} V	I_{dAV} A	@ T_C °C	I_{FSM} 45°C 10 ms A	V_{T0} V	r_T mΩ	T_{VJM} °C	R_{thJC} per Chip K/W	R_{thJH} per Chip K/W	Fig. No.
VHO 55-08io7	800	250	53	85	550	0.85	11	125	0.9	1.1	X118a
VHO 55-12io7	1200	400									
VHO 55-14io7	1400	440									
VHO 55-16io7	1600	500									

Package style

Outline drawings on page 188 - 224

X101 **ECO-PAC 1**
Weight = 19 g

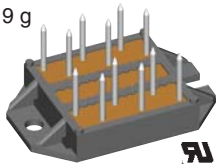

See data sheet for pin arrangement

1~ Full Controlled Rectifier Bridge, B2C

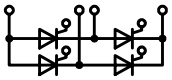

VKO 55-08io7	800	250	53	85	550	0.85	11	125	0.9	1.1	X118a
VKO 55-12io7	1200	400									
VKO 55-14io7	1400	440									
VKO 55-16io7	1600	500									

X106a
Weight = 28 g

1~ Full Controlled Rectifier Bridge, B2CF

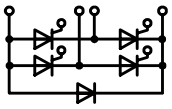

VKF 55-08io7	800	250	53	85	550	0.85	11	125	0.9	1.1	X118a
VKF 55-12io7	1200	400									
VKF 55-14io7	1400	440									
VKF 55-16io7	1600	500									

X118a
Weight = 100 g

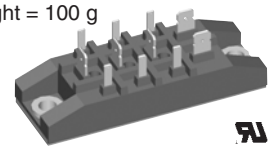

1~ Half Controlled Rectifier Bridge, B2HZ

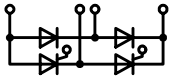

VGO 36-08io7	800	250	36	85	320	0.85	13	125	1.4	2.0	X101
VGO 36-12io7	1200	400									
VGO 36-14io7	1400	440									
VGO 36-16io7	1600	500									
VGO 55-08io7	800	250	53	85	550	0.85	11	125	0.9	1.1	X118a
VGO 55-12io7	1200	400									
VGO 55-14io7	1400	440									
VGO 55-16io7	1600	500									

Thyristor Module

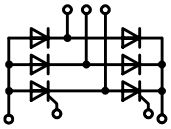

VVY 40-16io1	1600	500	34	100	320	0.85	15	125	1.0	1.6	X106a

Data according to IEC 60747 and refer to a single diode or thyristor unless otherwise stated.

1~ / 3~ High Voltage Rectifier Modules

UGE

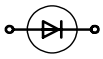

UGB

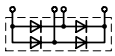

UGD

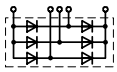

Type	V_{RRM} V	I_{dAV} ① / ② A	I_{FSM} 45°C 10 ms A	V_{T0} V	r_T mΩ	T_{VJM} °C	R_{thJA1} ① K/W	R_{thJA2} ② K/W	Package style Outline drawings on page 188 - 224
UGE 0421 AY4	3200	23/7.4	300	1.7	16	150	1.9	7.1	X251 Weight = 130 g
UGE 0221 AY4	4800	10/3.8	180	2.55	90	150	1.7	8.0	
UGE 1112 AY4	8000	4.2/2.0	120	4.25	215	150	4.2	10.0	
UGE 3126 AY4	24000	2.0/0.8	70	12	1800	150	2.7	8.7	
UGB 3132 AD	4800	1.3	60	-	-	150	-	-	X252 Weight = 150 g X253 Weight = 300 g X253 X253
UGB 6124 AG	10500	1.0	50	-	-	150	-	-	
UGD 6123 AG	7200	1.8	50	-	-	150	-	-	
UGD 8124 AG	10500	1.2	50	-	-	150	-	-	

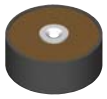

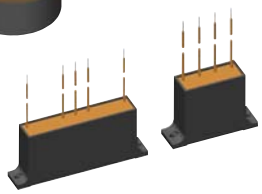

Data according to IEC 60747-2/6

① for oil-cooling with cooling plate, T_A = 35°C
② for natural air cooling without cooling plate, T_A = 45°C

High Voltage Rectifiers

Diode Assembly Range

HTZ

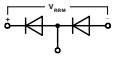

Type ➤ New	V_{RRM} V	$I_{F(AV)}$ A	@ T_A °C	I_{FSM} A	I_{RM} @ T_{VJM} mA	T_{VJ} °C	V_{FM} V	@ I_{FM} A	Fig. No.	Package style Outline drawings on page 188 - 224
HTZ110A16K **HTZ110A19K** **HTZ110A22K** **HTZ110A25K**	16000 19000 22000 25000	3.5	35	200	0.5	150	18.3	12	X250A	X250A Weight = 1550/1660 g
HTZ120A32K **HTZ120A38K** **HTZ120A44K** **HTZ120A51K**	32000 30000 44000 51000	2.0	35	200	0.5	150	36.8	12	X250A	
HTZ130B24K **HTZ130B28K** **HTZ130B33K** **HTZ130B38K**	24000 28000 33000 38000	1.0	35	100	0.5	150	24.0	2.0	X250B	X250B Weight = 380 g
HTZ150C6K **HTZ150C7K** **HTZ150C8K** **HTZ150C9K**	6000 7200 8400 9600	3.0	35	100	0.5	150	6.0	2.0	X250C	X250C Weight = 240/260/280 g
HTZ160C12K **HTZ160C14K** **HTZ160C17K** **HTZ160C19K**	12000 14400 16800 19200	1.7	35	100	0.5	150	12.0	2.0	X250C	
HTZ170C2K **HTZ170C2.4K** **HTZ170C2.8K**	2000 2400 2800	10.0	35	1000	0.5	150	1.9	40	X250C	X250D Weight = 500 g
HTZ180D22K **HTZ180D26K** **HTZ180D30K** **HTZ180D35K**	22000 26000 30000 35000	1.3	35	100	0.5	150	22.0	2.0	X250D	
HTZ240F10K **HTZ240F12K** **HTZ240F14K** **HTZ240F16K**	10000 12000 14000 16000	1.7	35	100	0.5	150	10.0	2.0	X250E	X250E Weight = 200 g
HTZ250G28K **HTZ250G33K** **HTZ250G39K** **HTZ250G44K**	28000 33600 39200 44800	2.7	35	200	0.5	150	32.0	12	X250F	X250F Weight = 2000/1700 g
HTZ260G14K **HTZ260G16K** **HTZ260G19K** **HTZ260G22K**	14000 16000 19000 22000	4.7	35	200	0.5	150	16.0	12	X250F	
HTZ270H40K **HTZ270H48K** **HTZ270H56K** **HTZ270H64K**	40000 48000 56000 64000	3.4	35	200	0.5	150	46.0	12	X250G	X250G Weight = 2200/2000 g
HTZ280H20K **HTZ280H24K** **HTZ280H28K** **HTZ280H32K**	20000 24000 28000 32000	4.7	35	200	0.5	150	23.0	12	X250G	

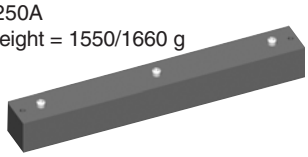

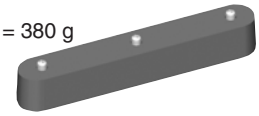

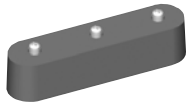

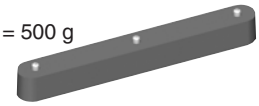

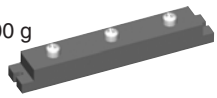

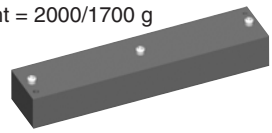

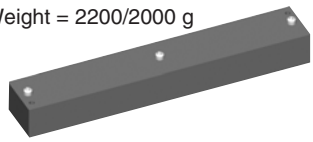

Data according to IEC 60747 and refer to a single diode or thyristor unless otherwise stated.

3~ Rectifier Bridges, B6U

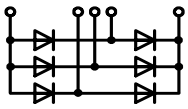

Type ➤ New	V_{RRM} V	V_{VRMS} V	I_{dAV} A	T_C °C	I_{FSM} 45°C 10 ms A	V_{T0} V	r_T mΩ	T_{VJM} °C	R_{thJC} per Chip K/W	R_{thJH} per Chip K/W	Fig. No.
VUO 16-08NO1	800	250	15		100	0.8	50	130	-	4.5	X103
VUO 16-12NO1	1200	400									
VUO 16-14NO1	1400	440	T_H = 90°C								
VUO 16-16NO1	1600	500									
VUO 16-18NO1	1800	575									
FUO 22-12N	1200	400	27	90	100	0.83	28	150	4	5	X024a
FUO 22-16N	1600	500									
VUO 22-08NO1	800	250	22		100	0.8	40	130	-	3.1	X103
VUO 22-12NO1	1200	400									
VUO 22-14NO1	1400	440	T_H = 90°C								
VUO 22-16NO1	1600	500									
VUO 22-18NO1	1800	575									
VUO 25-08NO8	800	250	20	85	380	0.85	12	150	9.3	10.2	X116b
VUO 25-12NO8	1200	400									
VUO 25-14NO8	1400	440									
VUO 25-16NO8	1600	500									
VUO 25-18NO8	1800	575									
VUO 27-08NO7	800	250	28	100	100	0.8	40	150	2.3	2.8	X100
VUO 27-12NO7	1200	400									
VUO 28-08NO7	800	250	28	100	100	0.8	40	150	2.3	2.8	X101
VUO 28-12NO7	1200	400									
VUO 36-08NO8	800	250	27	85	550	0.8	7.4	150	7.5	8.4	X116b
VUO 36-12NO8	1200	400									
VUO 36-14NO8	1400	440									
VUO 36-16NO8	1600	500									
VUO 36-18NO8	1800	575									
VUO 34-08NO1	800	250	36		300	0.8	15	130	-	2.5	X103
VUO 34-12NO1	1200	400									
VUO 34-14NO1	1400	440	T_H =90°C								
VUO 34-16NO1	1600	500									
VUO 34-18NO1	1800	575									
VUO 30-08NO3	800	250	37	85	300	0.9	11	125	2.4	3.0	X117b
VUO 30-12NO3	1200	400									
VUO 30-14NO3	1400	440									
VUO 30-16NO3	1600	500									
VUO 30-18NO3	1800	575									
VUO 35-08NO7	800	250	38	85	400	0.85	12	150	4.2	4.8	X119
VUO 35-12NO7	1200	400									
VUO 35-14NO7	1400	440									
VUO 35-16NO7	1600	500									
VUO 35-18NO7	1800	575									
FUO 50-16N	1600	500	50	90	200	tbd	tbd	150	2.1	3.2	X024a
VUO 52-08NO1	800	250	54		350	0.8	12.5	130	-	1.5	X103
VUO 52-12NO1	1200	400									
VUO 52-14NO1	1400	440	T_H = 90°C								
VUO 52-16NO1	1600	500									
VUO 52-18NO1	1600	500									
VUO 52-20NO1	1800	575									
VUO 50-08NO3	800	250	58	85	500	0.9	6	125	1.62	2.22	X117b
VUO 50-12NO3	1200	400									
VUO 50-14NO3	1400	440									
VUO 50-16NO3	1600	500									
VUO 50-18NO3	1800	575									
VUO 55-12NO7	1200	400	58	85	750	0.85	8	150	2.7	3.06	X120
VUO 55-14NO7	1400	440									
VUO 55-16NO7	1600	500									
VUO 55-18NO7	1800	575									
VUO 60-12NO3	800	250	72	85	600	0.8	6.5	125	1.2	1.6	X117b
VUO 60-14NO3	1400	440									
VUO 60-16NO3	1600	500									
VUO 60-18NO3	1800	575									

Package style

Outline drawings on page 188 - 224

X024a **ISOPLUS i4-PAC™**
Weight = 6 g

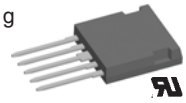

X100 **Slim-PAC**
Weight = 17 g

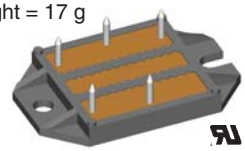

See data sheet for pin arrangement

X101 **ECO-PAC 1**
Weight = 19 g

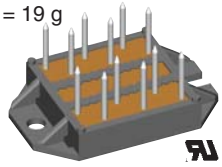

See data sheet for pin arrangement

X103
Weight = 35 g

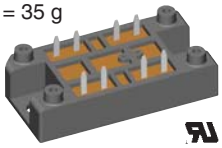

X116b
Weight = 22 g

X117b
Weight = 50 g

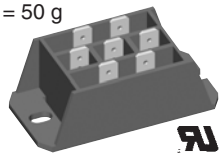

X119
Weight = 135 g

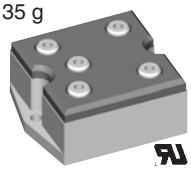

X120
Weight = 260 g

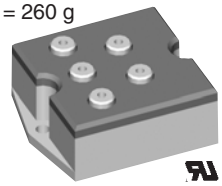

Data according to IEC 60747 and refer to a single diode or thyristor unless otherwise stated.

3~ Rectifier Bridges, B6U

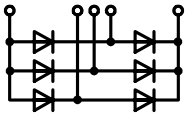

Type ➤ New	V_{RRM} V	V_{vRMS} V	I_{dAV} A	T_C °C	I_{FSM} 45°C 10 ms A	V_{T0} V	r_T mΩ	T_{VJM} °C	R_{thJC} per Chip K/W	R_{thJH} per Chip K/W	Fig. No.
VUO 62-08NO7	800	250	63	110	550	0.8	8	150	1.45	1.87	X122
VUO 62-12NO7	1200	400									
VUO 62-14NO7	1400	440									
VUO 62-16NO7	1600	500									
VUO 62-18NO7	1800	575									
VUO 68-08NO7	800	250	68	100	300	0.8	13	150	1.1	1.6	X101
VUO 68-12NO7	1200	400									
VUO 68-14NO7	1400	440									
VUO 68-16NO7	1600	500									
VUO 70-08NO7	800	250	70	100	550	0.8	8	150	1.45	1.9	X118a
VUO 70-12NO7	1200	400									
VUO 70-14NO7	1400	440									
VUO 70-16NO7	1600	500									
VUO 80-08NO1	800	250	82		600	0.8	7.5	150	-	1.42	X103
VUO 80-12NO1	1200	400	T_H = 90°C								
VUO 80-14NO1	1400	440									
VUO 80-16NO1	1600	500									
VUO 80-18NO1	1800	575									
VUO 82-08NO7	800	250	88	110	750	0.8	5	150	1.1	1.52	X122
VUO 82-12NO7	1200	400									
VUO 82-14NO7	1400	440									
VUO 82-16NO7	1600	500									
VUO 82-18NO7	1800	575									
VUO 85-08NO7	800	250	85	100	750	0.8	6	150	1.3	1.6	X118a
VUO 85-12NO7	1200	400									
VUO 85-14NO7	1400	440									
VUO 85-16NO7	1600	500									
VUO 86-08NO7	600	125	86	90	530	0.8	7.5	150	1.2	1.5	X101
VUO 86-12NO7	1200	400									
VUO 86-14NO7	1400	440									
VUO 86-16NO7	1600	500									
VUO 98-08NO7	800	250	95	85	750	0.8	6	150	1.2	1.5	X102
VUO 98-12NO7	1200	400									
VUO 98-14NO7	1400	440									
VUO 98-16NO7	1600	500									
VUO 100-08NO7	800	250	100	100	1000	0.8	5	150	1.12	1.5	X118a
VUO 100-12NO7	1200	400									
VUO 100-14NO7	1400	440									
VUO 100-16NO7	1600	500									
VUO 105-12NO7	1200	400	140	85	1500	0.8	5	150	0.83	1.13	X121
VUO 105-14NO7	1400	440									
VUO 105-16NO7	1600	500									
VUO 105-18NO7	1800	575									
VUO 110-08NO7	800	250	127	110	1200	0.8	4	150	0.90	1.08	X123a
VUO 110-12NO7	1200	400									
VUO 110-14NO7	1400	440									
VUO 110-16NO7	1600	500									
VUO 110-18NO7	1800	575									

Package style

Outline drawings on page 188 - 224

X101 **ECO-PAC 1**
Weight = 19 g

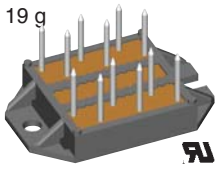

See data sheet for pin arrangement

X102 **ECO-PAC 2**
Weight = 24 g

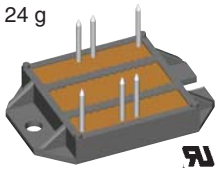

See data sheet for pin arrangement

X103
Weight = 35 g

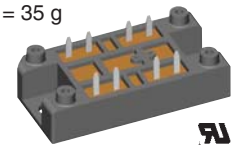

X118a
Weight = 100 g

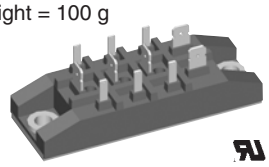

X121
Weight = 225 g

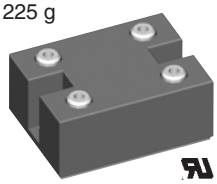

X122
Weight = 160 g

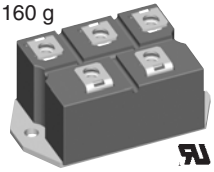

X123a
Weight = 300 g

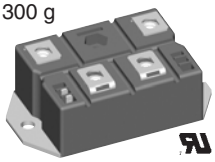

Data according to IEC 60747 and refer to a single diode or thyristor unless otherwise stated.

3~ Rectifier Bridges, B6U

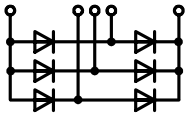

Type ➤ New	V_{RRM} V	V_{vRMS} V	I_{dAV} A	T_C °C	I_{FSM} 45°C 10 ms A	V_{T0} V	r_T mΩ	T_{VJM} °C	R_{thJC} per Chip K/W	R_{thJH} per Chip K/W	Fig. No.
VUO 120-12NO1 **VUO 120-16NO1**	1200 1600	1200 1600	121	75	650	0.8	6.1	150	1.0	1.3	X104
VUO 121-16NO1	1600	575	118	100	650	0.8	5	150	0.8	0.9	X112
VUO 122-08NO7 **VUO 122-12NO7** **VUO 122-14NO7** **VUO 122-16NO7** **VUO 122-18NO7**	800 1200 1400 1600 1800	250 400 440 500 575	117	100	900	0.8	4	150	0.85	1.15	X102
VUO 155-12NO1 **VUO 155-16NO1**	1200 1600	1200 1600	157	75	850	0.75	4.6	150	0.8	1.1	X104
VUO 160-08NO7 **VUO 160-12NO7** **VUO 160-14NO7** **VUO 160-16NO7** **VUO 160-18NO7**	800 1200 1400 1600 1800	250 400 440 500 575	175	90	1800	0.8	3	150	0.65	0.83	X123a
VUO 125-12NO7 **VUO 125-14NO7** **VUO 125-16NO7** **VUO 125-18NO7**	1200 1400 1600 1800	400 440 500 575	166	85	1800	0.8	3	150	0.83	1.13	X121
VUO 190-08NO7 **VUO 190-12NO7** **VUO 190-14NO7** **VUO 190-16NO7** **VUO 190-18NO7**	800 1200 1400 1600 1800	250 400 440 500 575	248	110	2800	0.8	2.2	150	0.45	0.6	X123a

Package style

Outline drawings on page 188 - 224

X102 **ECO-PAC 2**
Weight = 24 g

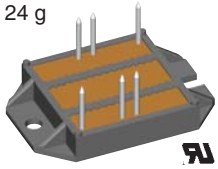

See data sheet for pin arrangement

X104 V2-Package
Weight = 80 g

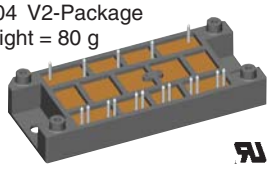

X112
Weight = 180 g

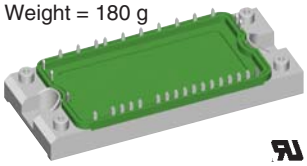

X121
Weight = 225 g

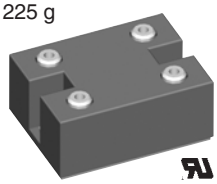

X123a
Weight = 300 g

Data according to IEC 60747 and refer to a single diode or thyristor unless otherwise stated.

3~ Rectifier Bridges

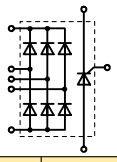

3~ Rectifier Bridges with Fast Diodes (t_{rr} = 1.5 µs) and Integrated Softstart Thyristor

Type	V_{RRM} V	V_{vRMS} V	I_{dAVM} A	T_H °C		I_{FSM} 45°C 10 ms A	V_{T0} V	r_T mΩ	T_{VJM} °C	R_{thJC} per Chip K/W	R_{thJH} per Chip K/W	Fig. No.
VUC 25-12go2	1200	400	25	85	Dio.	300	1.2	18	125	2.3	2.9	X106
VUC 25-14go2	1400	440										
VUC 25-16go2	1600	500			Thyr.	330	1.1	11	125	0.9	1.1	
VUC 36-12go2	1200	400	34	85	Dio.	300	1.2	16	125	1.4	2.0	
VUC 36-14go2	1400	440										
VUC 36-16go2	1600	500			Thyr.	400	0.85	10	125	0.9	1.1	

Package style

Outline drawings on page 188 - 224

X101 **ECO-PAC 1**
Weight = 19 g

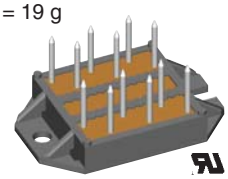

See data sheet for pin arrangement

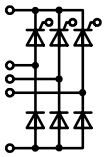

3~ Half Controlled Rectifier Bridges, B6HK

Type ➤ New	V_{RRM} V	V_{vRMS} V	I_{dAV} T_H=100°C A	I_{FSM} 45°C 10 ms A	V_{T0} V	r_T mΩ	T_{VJM} °C	R_{thJC} per Chip K/W	R_{thJH} per Chip K/W	Fig. No.
VVZ 12-12io1	1200	400	15	110	1.1	30	125	2.5	3.1	X106a
VVZ 12-14io1	1400	440								
VVZ 12-16io1	1600	500								
VVZ 24-12io1	1200	400	21	300	1.0	16	125	2.1	2.7	
VVZ 24-14io1	1400	440								
VVZ 24-16io1	1600	500								
VVZ 39-08ho7	800	250	39	200	0.85	27	125	1.3	1.8	X101
VVZ 39-12ho7	1200	400	T_C = 85°C							
VVZ 40-12io1	1200	400	34	320	0.85	15	125	1.0	1.6	X106a
VVZ 40-14io1	1400	440								
VVZ 40-16io1	1600	500								
VVZ 70-08io7	800	250	70	550	0.85	11	125	0.9	1.1	X118a
VVZ 70-12io7	1200	400	T_C = 85°C							
VVZ 70-14io7	1400	440								
VVZ 70-16io7	1600	500								
VVZ 110-12io7	1200	400	110	1150	0.85	6	125	0.65	0.80	X123b
VVZ 110-14io7	1400	440	T_C = 85°C							
VVZ 175-12io7	1200	400	167	1500	0.85	3.5	125	0.46	0.55	
VVZ 175-14io7	1400	440	T_C = 85°C							
VVZ 175-16io7	1600	500								

X106a
Weight = 28 g

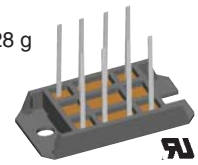

X118a
Weight = 100 g

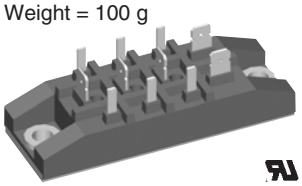

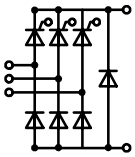

3~ Half Controlled Rectifier Bridges with free wheeling diode, B6HKF

Type	V_{RRM} V	V_{vRMS} V	I_{dAV} T_C = 85°C A	I_{FSM} 45°C 10 ms A	V_{T0} V	r_T mΩ	T_{VJM} °C	R_{thJC} per Chip K/W	R_{thJH} per Chip K/W	Fig. No.
VVZF 70-08io7	800	250	70	550	0.85	11	125	0.9	1.1	X118a
VVZF 70-12io7	1200	400								
VVZF 70-14io7	1400	440								
VVZF 70-16io7	1600	500								

X123b
Weight = 300 g

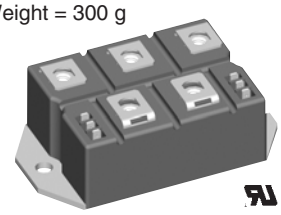

Data according to IEC 60747 and refer to a single diode or thyristor unless otherwise stated.

3~ Rectifier Bridges

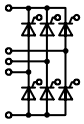

3~ Full Controlled Rectifier Bridges, B6C

Type ➤ New	V_{RRM} V	V_{vRMS} V	I_{dAV} T_C=100°C A	I_{TSM} 45°C 10 ms A	V_{T0} V	r_T mΩ	T_{VJM} °C	R_{thJC} per Chip K/W	R_{thJH} per Chip K/W	Fig. No.
VTO 39-08ho7 **VTO 39-12ho7**	800 1200	250 400	39 T_C = 85°C	200	0.85	27	125	1.3	1.8	X101
VTO 70-08io7 **VTO 70-12io7** **VTO 70-14io7** **VTO 70-16io7**	800 1200 1400 1600	250 400 440 500	70 T_C = 85°C	550	0.85	11	125	0.9	1.1	X118a
VTO 110-12io7 **VTO 110-14io7**	1200 1400	400 440	110	1150	0.85	6	125	0.65	0.80	X123b
VTO 175-12io7 **VTO 175-14io7** **VTO 175-16io7**	1200 1400 1600	400 440 500	167	1500	0.85	3.5	125	0.46	0.55	

Package style

Outline drawings on page 188 - 224

X101 **ECO-PAC 1**
Weight = 19 g

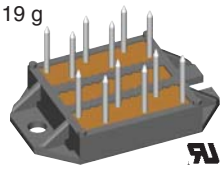

See data sheet for pin arrangement

X118a
Weight = 100 g

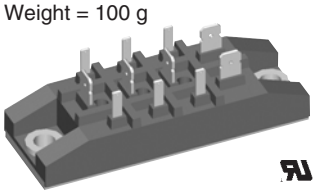

X123b
Weight = 300 g

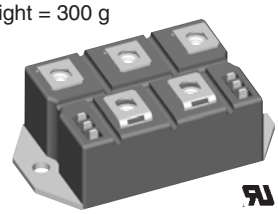

3~ Full Controlled Rectifier Bridge with free wheeling diode, B6CF

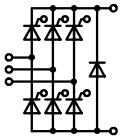

VTOF 70-08io7 **VTOF 70-12io7** **VTOF 70-14io7** **VTOF 70-16io7**	800 1200 1400 1600	250 400 440 500	70 T_C = 85°C	550	0.85	11	125	0.9	1.1	X118a

AC Controller 1~ / 2~ / 3~

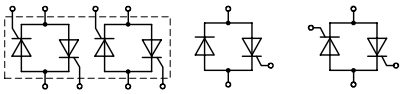

VW 2x... MLO MMO

I_{RMS} = 30 - 230 A

	Type	V_{RRM}	V_{vRMS}	I_{RMS} T_C = 85°C	I_{TSM} 45°C 10 ms	V_{T0}	r_T	T_{VJM}	R_{thJC} per Chip	R_{thJH}	Fig. No.	Package style
	➤ New	V	V	A	A	V	mΩ	°C	K/W	K/W		Outline drawings on page 188 - 224
1~	MLO 36-12io1 MLO 36-16io1	1200 1600	400 500	39	360	0.85	15	125	1.3	1.5	X106b	X027a SOT-227B miniBLOC Weight = 30 g
1~	MLO 75-12io1 MLO 75-16io1	1200 1600	400 500	86	1150	0.85	5	125	0.55	0.75		
1~	MLO 110-08io7 MLO 110-12io7 MLO 110-14io7	800 1200 1400	250 400 440	112	1000	0.85	5.6	150	0.8	0.92	X101	
1~	MLO 140-08io7 MLO 140-12io7 MLO 140-16io7	800 1200 1600	250 400 500	130	1150	0.85	5.2	150	0.7	0.82		
1~	MLO 175-08io7 MLO 175-12io7 MLO 175-16io7	800 1200 1600	250 400 500	175	1500	0.85	3.7	150	0.5	0.62		X101 ECO-PAC 1 Weight = 19 g
1~	MLO 230-08io7 MLO 230-12io7 MLO 230-14io7 MLO 230-16io7 MLO 230-18io7	800 1200 1400 1600 1800	250 400 440 500 575	230	2250	0.8	2.4	125	0.26	0.46	X102	See data sheet for pin arrangement
1~	MMO 36-12io1 MMO 36-16io1	1200 1600	400 500	39	360	0.85	15	125	1.3	1.5	X106a	
1~	MMO 75-12io1 MMO 75-16io1	1200 1600	400 500	86	1150	0.85	5	125	0.55	0.75		X102 ECO-PAC 2 Weight = 24 g
1~	MMO 62-12io6 MMO 62-16io6	1200 1600	400 500	54 T_C = 110°C	400	0.85	12	125	0.91	1.01	X027a	
1~	MMO 74-12io6 MMO 74-16io6	1200 1600	400 500	74 T_C = 110°C	600	0.85	8.4	150	0.71	0.81		
1~	MMO 90-12io6 MMO 90-14io6 MMO 90-16io6	1200 1400 1600	400 440 500	90 T_C = 111°C	800	0.9	5.8	150	0.6	0.7		See data sheet for pin arrangement
1~	MMO 110-08io7 MMO 110-12io7 MMO 110-14io7	800 1200 1400	250 400 440	112	1000	0.85	5.6	150	0.8	0.92	X101	X103 Weight = 35 g
1~	MMO 140-08io7 MMO 140-12io7 MMO 140-16io7	800 1200 1600	250 400 500	130	1150	0.85	5.2	150	0.7	0.82		
1~	MMO 175-08io7 MMO 175-12io7 MMO 175-16io7	800 1200 1600	250 400 500	175	1500	0.85	3.7	150	0.5	0.62		
1~	MMO 230-08io7 MMO 230-12io7 MMO 230-14io7 MMO 230-16io7 MMO 230-18io7	800 1200 1400 1600 1800	250 400 440 500 575	230	2250	0.8	2.4	125	0.26	0.46	X102	X106b Weight = 15 g
2~	VW 2x30-08io1 VW 2x30-12io1 VW 2x30-14io1 VW 2x30-16io1	800 1200 1400 1600	250 400 440 500	2x30	200	0.8	25	125	1.7	2.0	X103	
2~	VW 2x45-08io1 VW 2x45-12io1 VW 2x45-14io1 VW 2x45-16io1	800 1200 1400 1600	250 400 440 500	2x45	300	0.85	15	125	1.25	1.55		X106a Weight = 15 g
2~	VW 2x60-08io1 VW 2x60-12io1 VW 2x60-14io1 VW 2x60-16io1	800 1200 1400 1600	250 400 440 500	2x60	520	0.85	11	125	0.92	1.22		

Data according to IEC 60747 and refer to a single diode or thyristor unless otherwise stated.

AC Controller 1~ / 2~ / 3~

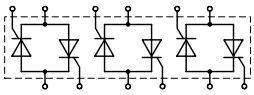

VWO

I_{RMS} = 39 - 143 A

	Type ➤ New	V_{RRM} V	V_{vRMS} V	I_{RMS} T_C = 85°C A	I_{TSM} 45°C 10 ms A	V_{T0} V	r_T mΩ	T_{VJM} °C	R_{thJC} per Chip K/W	R_{thJH} per Chip K/W	Fig. No.	Package style Outline drawings on page 188 - 224
3~	**VWO 35-08ho7** **VWO 35-12ho7**	800 1200	250 400	3x35	200	0.85	27	125	1.3	1.8	X101	X101 ECO-PAC 1 Weight = 19 g
	VWO 36-08io7 **VWO 36-12io7** **VWO 36-14io7** **VWO 36-16io7**	800 1200 1400 1600	250 400 440 500	3x39 T_H = 85°C	320	0.85	13	125	1.3	1.5	X118a	
	VWO 40-08io7 **VWO 40-12io7** **VWO 40-14io7** **VWO 40-16io7**	800 1200 1400 1600	250 400 440 500	3x40	400	0.85	15	125	1.43	1.53	X124	
	VWO 50-08io7 **VWO 50-12io7** **VWO 50-14io7** **VWO 50-16io7**	800 1200 1400 1600	250 400 440 500	3x50	520	0.85	11	125	1.2	1.31	X124	
	VWO 60-08io7 **VWO 60-12io7** **VWO 60-14io7** **VWO 60-16io7**	800 1200 1400 1600	250 400 440 500	3x60 T_H = 85°C	550	0.85	11	125	0.9	1.1	X118a	
	VWO 85-08io1 **VWO 85-12io1** **VWO 85-14io1** **VWO 85-16io1**	800 1200 1400 1600	250 400 440 500	3x83	520	0.85	11	150	0.92	1.22	X104	
	VWO 80-08io7 **VWO 80-12io7** **VWO 80-14io7**	800 1200 1400	250 400 440	3x82	1000	0.85	5.2	125	0.81	1.0	X124	
	VWO 95-08io7 **VWO 95-12io7** **VWO 95-14io7**	800 1200 1400	250 400 440	3x96	1150	0.85	4.8	125	0.66	0.93		
	VWO 140-08io1 **VWO 140-12io1** **VWO 140-14io1** **VWO 140-16io1**	800 1200 1400 1600	250 400 440 500	3x143	1150	0.85	5.2	150	0.6	0.7	X104	

See data sheet for pin arrangement

X104 V2-Package
Weight = 80 g

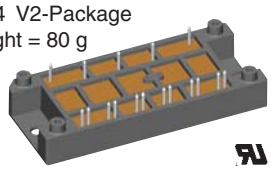

X118a
Weight = 100 g

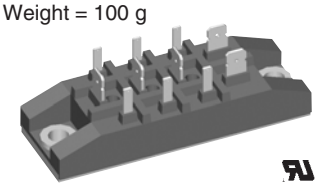

X124
Weight = 180 g

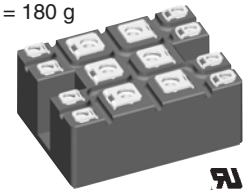

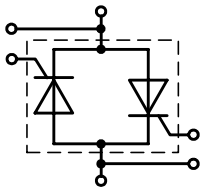

1~ AC Controller with isolated Water Cooling

	Type	V_{RRM} V	V_{vRMS} V	I_{RMS} T_{water}=17 °C 4l/min A	I_{TSM} 45°C 10 ms A	V_{T0} V	r_T mΩ	T_{VJM} °C	R_{thJW} per Chip 4l/min K/W	Package style Outline drawings on page 188 - 224
1~	**HVL 900-12io1** **HVL 900-14io1** **HVL 900-16io1** **HVL 900-18io1**	1200 1400 1600 1800	400 440 500 590	900	9200	0.8	0.68	140	0.203	X133 Weight = 1300 g

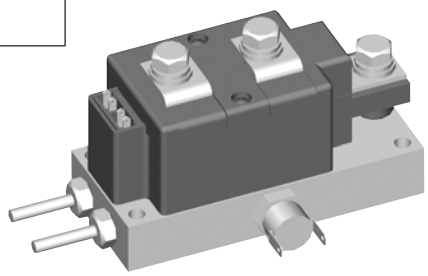

Data according to IEC 60747 and refer to a single diode or thyristor unless otherwise stated.

Braking Rectifier Assemblies

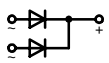
VGF 0136 AH

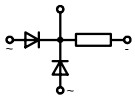
VGF 0136 AB

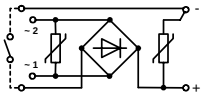
VGB 0124 AY7

Type	Typical V_{vRMS} V	Typical V_{dAV} V	Typical I_{dAVM} A	Max. I_{dAVM} A	Max. V_{RRM} V	Max. I_{FSM} A	Max. I^2t A^2s	Fig. No.	Package style Outline drawings on page 188 - 224
VGB 0124 AY7a	380	340	1.0	1.0	1400	60	28	X254	X256 Weight = 50 g
VGF 0136 AB	1000	440	1.2	1.5	2800	80	40	X255	
VGF 0136 AH	1000	440	0.6	1.1	1400	60	28	X256	

X254
Weight = 60 g

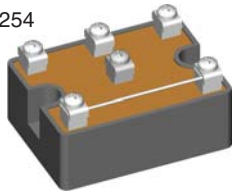

X255
Weight = 100 g

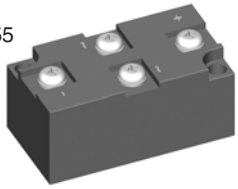

Breakover Diodes

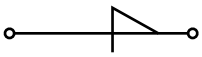
Version R

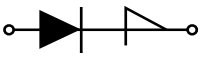
Version RD

Type ➤ New	V_{BO} V	I_{BO} T_{VJ} = 25 °C mA	I_D 125 °C µA	I_H T_J = 25 °C mA	V_H T_{VJ} = 25 °C V	I_{AVM} ① 50 °C A	I_{SM} 50 °C A	dv/dt V/µs	R_{thJA} °C/W	Fig. No.	Package style Outline drawings on page 188 - 224
IXBOD 1-06 **IXBOD 1-07** **IXBOD 1-08** **IXBOD 1-09** **IXBOD 1-10**	600 ±50 700 800 900 1000	≤15	20 0.8 x V_{BO}	30	4-8	0.9	200	>1000	60	X201	X201 Weight = 0.8 g
IXBOD 1-12 R(D) **IXBOD 1-13 R(D)** **IXBOD 1-14 R(D)** **IXBOD 1-15 R(D)**	1200 ±50 1300 1400 1500	≤15	100 0.8x V_{BO}	30	4-8	1.25	200	>1000	20	X202	
IXBOD 1-16 R(D) **IXBOD 1-17 R(D)** **IXBOD 1-18 R(D)** **IXBOD 1-19 R(D)**	1600 ±50 1700 1800 1900	≤15	100	30	4-8	1.25	200	>1500	20		
IXBOD 1-20 R(D)	2000 ±50	≤15	100	30	4-8	0.9	200	>1500	20		
IXBOD 1-21 R(D) **IXBOD 1-22 R(D)** **IXBOD 1-23 R(D)** **IXBOD 1-24 R(D)** **IXBOD 1-25 R(D)**	2100 ±50 2200 2300 2400 2500	≤15	100	30	4-8	0.9	200	>2000	20		X202 Weight = 14 g
IXBOD 1-26 R(D) **IXBOD 1-28 R(D)** **IXBOD 1-30 R(D)**	2600 ±100 2800 3000	≤15	100	30	4-8	0.7	200	>2500	20		
IXBOD 1-32 R(D) **IXBOD 1-34 R**	3200 ±100 3400	≤15	100	30	4-8	0.7	200	>3000	20		
IXBOD 1-36 R **IXBOD 1-38 R** **IXBOD 1-40 R** **IXBOD 1-42 R**	3600 ±100 3800 4000 4200	≤15	100	30	4-8	0.7	200	>3500	20		

① Leads soldered on PCB board, T_S and T_{VJ} = -40 ... +125°C

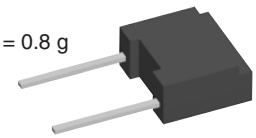

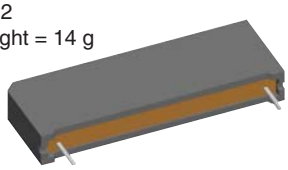

Break-Over-Diodes Sets

We deliver also:

- Special selection of more than 2 pcs IXBOD1-... for every break down voltage of VBO > 2000 V
- Example
  type designation IXBOD Set SA05/00
  VBO = 4700 V ±100 V
  (we deliver 5pcs single selected IXBOD1-... in one plastic bag)
  Customer use these products on PCB connected in series with parallel resistor R = 10 MΩ
  across each IXBOD

Data according to IEC 60747 and refer to a single diode or thyristor unless otherwise stated.

Ultra-fast Power MOSFET / IGBT Drivers

These ultra-fast high current drivers are optimized for high efficiency performance in the motor drive and power conversion applications. They are designed to switch largest MOSFETs and IGBTs with minimum switching times at frequencies to 10 MHz. These MOSFET/IGBT drivers are manufactured in industry standard outlines, which include TO-263, TO-220 and many IC packages offering superior thermal performance.

Features

- Wide operating voltage range from 4.5 V to 35 V
- Rated for -55 °C to +125 °C operation
- Very Low output impedance
- No internal cross conduction which allows operating frequency to 10 MHz
- Latch-up protected to rated reverse current
- Output Current - up to 30 A peak
- Very low thermal impedance for TO-263 & TO-220 packages
- Matched rise and fall times
- ENABLE pin for emergency shutdown
- TTL or CMOS input signals
- Grounded base tab in 8-Pin SOIC-CT, 14-Pin SOIC-CT, 16-PIN SOIC-CT and 28 Pin SOIC-CT packages for PC board cooling.

Applications

- Inverters
- SMPS Class D Amplifiers
- Power Factor Correction
- Motor drives
- Line drivers
- Traction
- Radiology and laser technology

Low Side MOSFET/IGBT Gate Driver Selection Guide

Part Number	Type	Logic Configuration	I_{PK} Output Current A	Output Resistance Ohm	Package (See Note 1)	Notes	Fig. No.	Outline drawings on page 188 - 224
IXDI402PI	Dual	Inverting	2	4	8-pin DIP	-	X500	
IXDI402SI		Inverting			8-pin SOP-CT	-	X501	
IXDI402SI-16		Inverting			16-pin SOP-CT	-	X531	
IXDI402SIA		Inverting			8-pin SOP	-	X501	
IXDI402SIA-16		Inverting			16-pin SOP	-	X531	X531 16 pin SOP 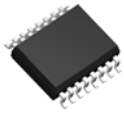
IXDN402PI		Non-inverting			8-pin DIP	-	X500	
IXDN402SI		Non-inverting			8-pin SOP-CT	-	X501	
IXDN402SI-16		Non-inverting			16-pin SOP-CT	-	X531	
IXDN402SIA		Non-inverting			8-pin SOP	-	X501	
IXDN402SIA-16		Non-inverting			16-pin SOP	-	X531	
IXDF402PI		Non-inverting / Inverting			8-pin DIP	-	X500	
IXDF402SI		Non-inverting / Inverting			8-pin SOP-CT	-	X501	
IXDF402SI-16		Non-inverting / Inverting			16-pin SOP-CT	-	X531	
IXDF402SIA		Non-inverting / Inverting			8-pin SOP	-	X501	
IXDF402SIA-16		Non-inverting / Inverting			16-pin SOP	-	X531	
IXDI404PI	Dual	Inverting	4	2.5	8-pin DIP	-	X500	X500 8-pin DIP
IXDI404SI		Inverting			8-pin SOP-CT	-	X501	
IXDI404SI-16		Inverting			16-pin SOP-CT	-	X531	
IXDI404SIA		Inverting			8-pin SOP	-	X501	
IXDI404SIA-16		Inverting			16-pin SOP	-	X531	
IXDN404PI		Non-inverting			8-pin DIP	-	X500	
IXDN404SI		Non-inverting			8-pin SOP-CT	-	X501	
IXDN404SI-16		Non-inverting			16-pin SOP-CT	-	X531	
IXDN404SIA		Non-inverting			8-pin SOP	-	X501	
IXDN404SIA-16		Non-inverting			16-pin SOP	-	X531	
IXDD404PI		Non-inverting			8-pin DIP	2	X500	
IXDD404SI		Non-inverting			8-pin SOP-CT	2	X501	X501 8-pin SOP
IXDD404SI-16		Non-inverting			16-pin SOP-CT	2	X531	
IXDD404SIA		Non-inverting			8-pin SOP	2	X501	
IXDD404SIA-16		Non-inverting			16-pin SOP	2	X531	
IXDF404PI		Non-inverting / Inverting			8-pin DIP	-	X500	
IXDF404SI		Non-inverting / Inverting			8-pin SOP-CT	-	X501	
IXDF404SI-16		Non-inverting / Inverting			16-pin SOP-CT	-	X531	
IXDF404SIA		Non-inverting / Inverting			8-pin SOP	-	X501	
IXDF404SIA-16		Non-inverting / Inverting			16-pin SOP	-	X531	

Notes
1. SOIC packages with suffix letter 'CT' have a grounded base solder tab.
2. Includes ENABLE function.
3. Includes ENABLE function + UVSEL=11.75V.
4. Includes ENABLE function + UVSEL=8.5V.
5. Includes ENABLE function + Programmable UVSEL voltage level.

Ultra-fast Power MOSFET / IGBT Drivers

Low Side MOSFET/IGBT Gate Driver Selection Guide

Part Number	Type	Logic Configuration	I_{PK} Output Current A	Output Resistance Ohm	Package (See Note 1)	Notes	Fig. No.
IXDI409CI	Single	Inverting	9	1.5	5-leaded TO-220	-	X006
IXDI409PI		Inverting			8-pin DIP	-	X500
IXDI409SI		Inverting			8-pin SOP-CT	-	X501
IXDI409YI		Inverting			5-leaded TO-263	-	X012a
IXDN409CI		Non-inverting			5-pin TO-220	-	X006
IXDN409PI		Non-inverting			8-pin DIP	-	X500
IXDN409SI		Non-inverting			8-pin SOP-CT	-	X501
IXDN409YI		Non-inverting			5-pin TO-263	-	X012a
IXDD409CI		Non-inverting			5-pin TO-220	2	X006
IXDD409PI		Non-inverting			8-pin DIP	2	X500
IXDD409SI		Non-inverting			8-pin SOP-CT	2	X501
IXDD409YI		Non-inverting			5-pin TO-263	2	X012a
IXDI414CI	Single	Inverting	14	1	5-pin TO-220	-	X006
IXDI414PI		Inverting			8-pin DIP	-	X500
IXDI414SI		Inverting			14-pin SOP-CT	-	X521
IXDI414YI		Inverting			5-pin TO-263	-	X012a
IXDN414CI		Non-inverting			5-pin TO-220	-	X006
IXDN414PI		Non-inverting			8-pin DIP	-	X500
IXDN414SI		Non-inverting			14-pin SOP-CT	-	X521
IXDN414YI		Non-inverting			5-pin TO-263	-	X012a
IXDD414CI		Non-inverting			5-pin TO-220	2	X006
IXDD414PI		Non-inverting			8-pin DIP	2	X500
IXDD414SI		Non-inverting			14-pin SOP-CT	2	X521
IXDD414YI		Non-inverting			5-pin TO-263	2	X012a
IXDI430CI	Single	Inverting	30	0.4	5-pin TO-220	3	X006
IXDI430MCI		Inverting			5-pin TO-220	4	X006
IXDI430MYI		Inverting			5-pin TO-263	4	X012a
IXDI430YI		Inverting			5-pin TO-263	3	X012a
IXDN430CI		Non-inverting			5-pin TO-220	3	X006
IXDN430MCI		Non-inverting			5-pin TO-220	4	X006
IXDN430MYI		Non-inverting			5-pin TO-263	4	X012a
IXDN430YI		Non-inverting			5-pin TO-263	3	X012a
IXDD430CI		Non-inverting			5-pin TO-220	3	X006
IXDD430MCI		Non-inverting			5-pin TO-220	4	X006
IXDD430MYI		Non-inverting			5-pin TO-263	4	X012a
IXDD430YI		Non-inverting			5-pin TO-263	3	X012a
IXDS430SI		Non-inverting / Inverting			28-pin SOP-CT	5	X550

Outline drawings on page 188 - 224

X531 16 pin SOP

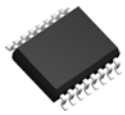

X500 8-pin DIP

X006 TO-220 (5)

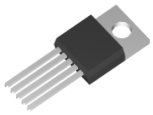

X012a TO-263(5)

X501 8-pin SOP

Notes

1. SOIC packages with suffix letter ‘CT’ have a grounded base solder tab.
2. Includes ENABLE function.
3. Includes ENABLE function + UVSEL = 11.75 V
4. Includes ENABLE function + UVSEL = 8.5 V.
5. Includes ENABLE function + Programmable UVSEL voltage level.

MOSFET / IGBT Half-Bridge Gate Drivers

Part Number ➤ New	Closet IR Cross	I_{PK} T_C=25°C A	Shutdown	Inputs / Keying	Protection Features	Deadtime	Package (Note 1)	Fig. No.
➤ **IXA611P7** ②	IR2112	0.6	Yes (High)	Dual/In Phase	No	No	14-Pin PDIP	X520
➤ **IXA611S3** ②	IR2112S		Yes (High)	Dual/In Phase	No	No	16-Pin SOP	X531
➤ **IXB611P1** ②	IR2103		No	Dual/High-In Phase/Low-Inv	Cross-Conduct	Fixed-520ns Typ	8-Pin PDIP	X500
➤ **IXB611S1** ②	IR2103S		No	Dual/High-In Phase/Low-Inv	Cross-Conduct	Fixed-520ns Typ	8-Pin SOP	X501
➤ **IXC611P1** ②	IR2111		No	Single/High Side	Cross-Conduct	Fixed-650ns Typ	8-Pin PDIP	X500
➤ **IXC611S1** ②	IR2111S		No	Single/High Side	Cross-Conduct	Fixed-650ns Typ	8-Pin SOP	X501
➤ **IXD611P1** ②	IR2106		No	Dual/In Phase	No	No	8-Pin PDIP	X500
➤ **IXD611P7** ②	IR2106		No	Dual/In Phase	No	No	14-Pin PDIP	X520
➤ **IXD611S1** ②	IR2106S		No	Dual/In Phase	No	No	8-Pin SOP	X501
➤ **IXD611S7** ②	IR2106S		No	Dual/In Phase	No	No	14-Pin SOP	X521
➤ **IXE611P1** ③	IR2301		No	Dual/In Phase	No	No	8-Pin PDIP	X500
➤ **IXE611S1** ③	IR2301S		No	Dual/In Phase	No	No	8-Pin SOP	X501
➤ **IXF611P1** ③	IR2302		Yes (Low)	Single/High Side	Cross-Conduct	Fixed-540ns Typ	8-Pin PDIP	X500
➤ **IXF611S1** ③	IR2302S		Yes (Low)	Single/High Side	Cross-Conduct	Fixed-540ns Typ	8-Pin SOP	X501
➤ **IXG611P1** ②	IR2304		No	Dual/In Phase	Cross-Conduct	Fixed-100ns Typ	8-Pin PDIP	X500
➤ **IXG611S1** ②	IR2304S		No	Dual/In Phase	Cross-Conduct	Fixed-100ns Typ	8-Pin SOP	X501
➤ **IXH611P1** ②	IR2308		No	Dual/In Phase	Cross-Conduct	Fixed-540ns Typ	8-Pin PDIP	X500
➤ **IXH611S1** ②	IR2308S		No	Dual/In Phase	Cross-Conduct	Fixed-540ns Typ	8-Pin SOP	X501
➤ **IXJ611P1** ②	IR2101		No	Dual/In Phase	No	No	8-Pin PDIP	X500
➤ **IXJ611S1** ②	IR2101S		No	Dual/In Phase	No	No	8-Pin SOP	X501
➤ **IXK611P1** ②	IR2102		No	Dual/Out of Phase	No	No	8-Pin PDIP	X500
➤ **IXK611S1** ②	IR2102S		No	Dual/Out of Phase	No	No	8-Pin SOP	X501
➤ **IX2A11P1** ②	IR2184	2	Yes (Low)	Single/High Side	Cross-Conduct	Fixed-500ns Typ	8-Pin PDIP	X500
➤ **IX2A11S1** ②	IR2184S		Yes (Low)	Single/High Side	Cross-Conduct	Fixed-500ns Typ	8-Pin SOP	X501
➤ **IX2B11P7** ②	IR21844		Yes (Low)	Single/High Side	Cross-Conduct	Programmable	14-Pin PDIP	X520
➤ **IX2B11S7** ②	IR21844S		Yes (Low)	Single/High Side	Cross-Conduct	Programmable	14-Pin SOP	X521
➤ **IX2C11P1** ②	IR2181		No	Dual/In Phase	No	No	8-Pin PDIP	X500
➤ **IX2C11S1** ②	IR2181S		No	Dual/In Phase	No	No	8-Pin SOP	X501
➤ **IX2D11P7** ②	IR21814		No	Dual/In Phase	No	No	14-Pin PDIP	X520
➤ **IX2D11S7** ②	IR21814S		No	Dual/In Phase	No	No	14-Pin SOP	X521
IX2R11P7 ②	IR2113		Yes (High)	Dual/In Phase	No	No	14-Pin PDIP	X520
IX2R11S3 ②	IR2113S		Yes (High)	Dual/In Phase	No	No	16-Pin SOP	X531
IX4R11P7 ②	IR2113	4	Yes (High)	Dual/In Phase	No	No	14-Pin PDIP	X520
IX4R11S3 ②	IR2113S		Yes (High)	Dual/In Phase	No	No	16-Pin SOP	X531
IX6R11P7 ②	IR2113	6	Yes (High)	Dual/In Phase	No	No	14-Pin PDIP	X520
IX6R11S3 ②	IR2113S		Yes (High)	Dual/In Phase	No	No	16-Pin SOP	X531
IX6R11S6 ②	IR2113S		Yes (High)	Dual/In Phase	No	No	18-Pin SOIC-CT	X542
➤ **IX6S11S6** ②	None		No	Dual/In Phase	No	No	18-Pin SOIC-CT	X542

② UVLO Level for MOSFETs
③ UVLO Level for Logic
Note 1. SOIC packages with suffix letter 'CT' have a grounded base solder tab.

Outline drawings on page 188 - 224

3 phase Driver

Part Number ➤ New	Closet IR Cross	I_{PK} T_C=25°C A	UVLO Level IGBT, MOSFET LOGIC	Shutdown	Inputs / Keying	Protection Features	Deadtime	Package	Fig. No.
➤ **IXA531L4** ①	IR21363J	0.6	IGBT	No	Six/ Out of Phase	Cross-, Conduct OCP (Prog. Reset)	No	44-Pin PLCC	X585
➤ **IXA531S10** ①	IR21363J	0.6	IGBT	No	Six/ Out of Phase	Cross- Conduct OCP (Prog. Reset)	No	48-Pin SSLGA	X595

① UVLO Level for IGBTs

Outline drawings on page 188 - 224

Gate Drive Evaluation Boards

MOSFET/IGBT Gate Drive Modules/Gate Drive IC Evaluation Boards

The EV-Series MOSFET Gate Drive Modules are general purpose gate drive circuits designed to drive the DE-Series RF POWER MOSFETs, as well as industry-standard MOSFETs and IGBTs. Designed using IXYS/DEI gate drive ICs, they serve as a system development tool for the design engineer, and as a convenient platform for the evaluation of the DE-Series RF MOSFET transistors. The EVDD415 and EVIC420 are designed to drive DE-Series RF MOSFETs. The EVDI402, EVDD404, EVDD409, EVDI409 and EVDD414 gate drive modules are designed to drive MOSFETs or IGBTs in various package types, including TO-220, TO-247, TO-264 or SOT-227 packages.

The evaluation board design allows the MOSFET or IGBT to be attached to a heat sink, and in so doing the board assembly can be used as a ground referenced, low side power switch for both single-ended and push-pull configurations. They may be used as pulse width agile, high power switching modules in pulse generators, RF generators, pulsed laser diode drivers and other high voltage, high speed applications.

By utilizing design techniques developed by DEI, the EVDD 415 and EVIC 420 gate drive modules can drive DE-Series MOSFET transistors at frequencies up to 45 MHz, provide continuously variable output pulse widths from ~5ns to DC, and rise times of <3ns (actual performance is dependent upon the specific gate drive module and the MOSFET device used).

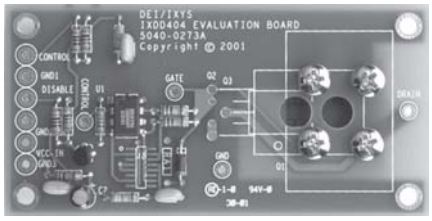

EVDD404 with IXDD404PI *

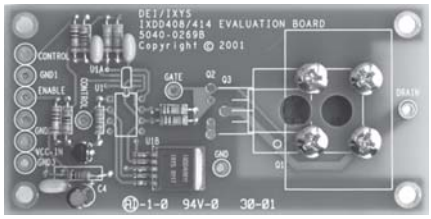

EVDD409 with IXDD409YI *

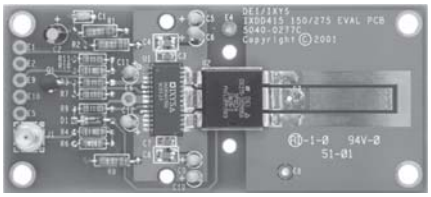
EVDD415 with IXDD415SI *

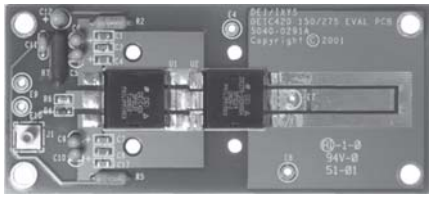
EVIC420A with DEIC420 *

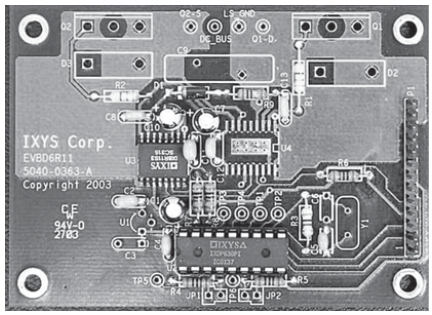

EV6R11 with IX6R11S3 *

Gate Drive Module/Evaluation Board Selection Guide

Gate Drive Module	Installed Device	Connectable Package *
EVDD430CI	IXDD430CI	TO-247, TO-268, SOT-227
EVDD430MCI	IXDD430MCI	TO-247, TO-268, SOT-227
EVDD430YI	IXDD430YI	TO-247, TO-268, SOT-227
EVDD430MYI	IXDD430MYI	TO-247, TO-268, SOT-227
EVDI430CI	IXDI430CI	TO-247, TO-268, SOT-227
EVDI430MCI	IXDI430MCI	TO-247, TO-268, SOT-227
EVDI430YI	IXDI430YI	TO-247, TO-268, SOT-227
EVDI430MYI	IXDI430MYI	TO-247, TO-268, SOT-227
EVDN430CI	IXDN430CI	TO-247, TO-268, SOT-227
EVDN430MCI	IXDN430MCI	TO-247, TO-268, SOT-227
EVDN430YI	IXDN430YI	TO-247, TO-268, SOT-227
EVDN430MYI	IXDN430MYI	TO-247, TO-268, SOT-227
EVDS430SI	IXDS430SI	TO-247, TO-268, SOT-227
EVBD4400	IXBD4400 Chip Set	TO-247, TO-264
EVDI402	IXDI402PI	TO-220, TO-247, TO-264, SOT-227
EVDN402	IXDN402PI	TO-220, TO-247, TO-264, SOT-227
EVDD404	IXDD404PI	TO-220, TO-247, TO-264, SOT-227
EVDI404	IXDI404PI	TO-220, TO-247, TO-264, SOT-227
EVDN404	IXDN404PI	TO-220, TO-247, TO-264, SOT-227
EVDI409	IXDI409YI	TO-220, TO-247, TO-264, SOT-227
EVDN409	IXDN409YI	TO-220, TO-247, TO-264, SOT-227
EVDD414	IXDD414YI	TO-220, TO-247, TO-264, SOT-227
EVDI414	IXDI414YI	TO-220, TO-247, TO-264, SOT-227
EVDN414	IXDN414YI	TO-220, TO-247, TO-264, SOT-227
EVDD415	IXDD415SI	DEI DE-150, DEI DE-275
EVIC420A	DEIC420	DEI DE-150, DEI DE-275
EVIC420B	DEIC420	DEI DE-375, DEI DE-475
EV6R11S3	IX6R11S3	TO-247,TO-264
EV6R11S7	IX6R11S7	TO-247,TO-264

* Connectable Power MOSFET or IGBT is not included

High Voltage Current Regulators

Features

- Extremely stable current characteristics 50 ppm/K
- Minimum of 450 V breakdown
- 40 W continuous dissipation

Applications

- Start-up circuits for SMPS
- PABX current sources
- Telephone line terminations
- Surge limiters and protection
- Waveform synthesizers
- Soft start-up circuits

Non-switchable Regulators

This is a family of extremely stable, 450 Volt (min.) current regulators. Temperature stability is based on a threshold compensation technique and uses IXYS' most recently developed high voltage process. Some specific applications include PABX current sources and line terminations, high stability voltage sources, surge limiters, fast reacting non-destruct fuses and start-up circuits. These regulators also replace power resistors in house-keeping supplies derived from the AC mains, dramatically reducing power consumption while permitting universal use from 110-240 V AC without part changes.

Switchable Regulators

The **IXCP10M45S** is an enhanced version of IXYS' family of high voltage current regulators. It is similar in all respects to the standard product, except that it can be switched off by applying a negative voltage to its control pin. Minimum break-down voltage is in-creased to 450 V. For additional versatility, output current may be programmed by inserting a resistor between the negative output and control pins. A prime applica-tion to the switchable regulator is in house-keeping power supplies for switch-mode-power-supplies (SMPS), where shutting the regulator down once the SMPS is up and running reduces standby power consumption virtually to zero.

Characteristic

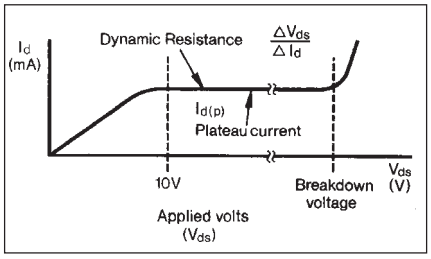

Current regulator	BV_{DS} min. V	$I_{D(P)}$ typ. mA	X005a TO-220 AB 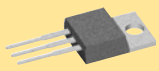	X004 TO-252 AA
DC Non-switchable	450	60	IXCP60M45	IXCY60M45
		50	IXCP50M45	IXCY50M45
		40	IXCP40M45	IXCY30M45
		20	IXCP20M45	IXCY20M45
		11	IXCP10M45	IXCY10M45
		2.2	IXCP02M45	IXCY02M45
Switchable	450	10	IXCP10M45S	IXCY10M45S
Gate Controlled	900	10	IXCP10M90S	IXCY10M90S

Outline drawings on page 188 - 224

IXOLAR™ High Efficiency Solar Cells
Technical Information

Description

IXOLAR™ Solar Cells are IXYS' monocrystalline, high efficiency solar cell technology products incorporating an enhanced light trapping surface. There are 6 different cell sizes available: 36 mm², 72 mm², 120 mm², 240 mm², 360 mm² and 480 mm².

The IXOLAR™ Solar Cells are ideal for charging various battery powered and handheld consumer products such as mobile phones, cameras, PDAs, MP3-Players and toys. They are also suitable for industrial applications such as wireless sensors, portable instrumentation and for charging emergency backup batteries.

With an efficiency of typically 17%, these solar cells give the ability to extend run time even in „low light" conditions and increase battery life and run time in a small footprint, which can be easily accommodated in the design of Portable Products.

IXOLAR products have a very good response over a wide wavelength range and therefore can be used in both indoor and outdoor applications.

Product and Ordering Information

Part Number	X [mm]	Y [mm]	Open Circuit Voltage [mV]	Short Circuit Current[mA]
XOD17-04B	6	6	630	12
XOD17-07B	12	6	630	24
XOD17-12B	6	20	630	42
XOD17-24B	12	20	630	84
XOD17-36B	18	20	630	126
XOD17-48B	24	20	630	168

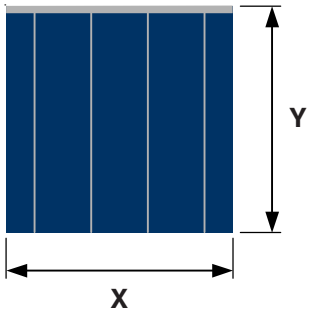

Front-side contact (–)
Back-side contact (+)

Electrical Characteristics

Symbol	Cell Parameter	Typical Ratings *)	Units
V_{OC}	open circuit voltage	630	mV
J_{SC}	short circuit current density	35	mA/cm²
V_{mpp}	voltage at max. power point	505	mV
J_{mpp}	current density at max. power point	32.5	mA/cm²
P_{mpp}	maximum peak power	16.6	mW/cm²
FF	fill factor	> 75	%
ç	efficiency	17	%
$\Delta V_{OC}/\Delta T$	open circuit voltage temp. coefficient	-2.1	mV/K
$\Delta J_{SC}/\Delta T$	short circuit current temp. coefficient	0.12	mA/(cm²K)
t	cell thickness	250	µm

*) All values measured at Standard Condition:
1 sun (= 100 mW/cm²), Air Mass 1.5, 25°C

Features

- Monocrystalline silicon technology
- High efficiency
- Enhanced light trapping surface texturization

Applications

- Battery chargers for portables such as cell phones, PDAs, GPS-Systems, …
- „Green" electricity generation
- Power backup for UPS, Sensors, Wearables

Advantages

- Long life and stable output
- Solderable back-side metallization
- Bondable front-side metallization
- Available in die and wafer form

IXOLAR™ High Efficiency Solar Bits

Description

IXOLAR™ Solar Bits are IXYS' product line of coated monocrystalline, high efficiency solar cell products using IXYS' XOD17 bondable solar cell dies. Solar Bits have reflow solderable surface mount packages, they are available in tape and reel packages and can be automatically pick and place mounted. There are 2 different Solar Bits available with different voltage and current output.

The IXOLAR™ Solar Bits are ideal for charging various battery powered and handheld consumer products such as mobile phones, cameras, PDAs, MP3-Players and toys. They are also suitable for industrial applications such as wireless sensors, portable instrumentation and for charging emergency backup batteries.

With a cell efficiency of typically 17%, Solar Bits give the ability to extend run time even in „low light" conditions and increase battery life and run time in a small footprint, which can be easily accommodated in the design of Portable Products. The design allows to flexibly connect Solar Bits in series and/or parallel to perfectly meet the application's power requirements.

IXOLAR products have a very good response over a wide wavelength range and therefore can be used in both indoor and outdoor applications.

Product and Ordering Information

Part Number	Open Circuit Voltage [V]	Short Circuit Current [mA]	Typ. Voltage @ P_{mpp} [V]	Typ. Current @ P_{mpp} [mA]
➤ **XOB17-12 x 1**	0.63	42.0	0.51	39.0
➤ **XOB17-04 x 3**	1.89	12.6	1.53	11.7

(all parameters given are typical values)

Dimensions (L x W x H): 22 x 7 x 1.4 [mm]

Solar Bit Weight: 0.5 grams

Solar Bits are compliant to the RoHS Norm.

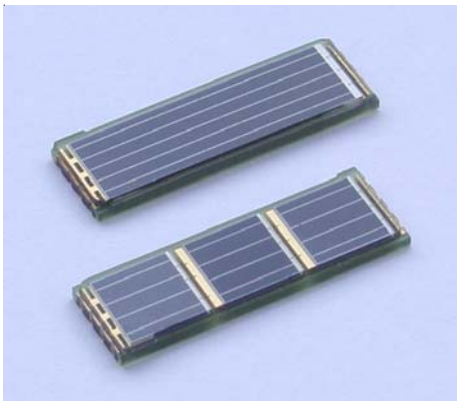

Solar Cell Electrical Characteristics

Symbol	Cell Parameter	TypicalRatings *)	Units
V_{OC}	open circuit voltage	630	mV
J_{SC}	short circuit current density	35	mA/cm²
V_{mpp}	voltage at max. power point	505	mV
J_{mpp}	current density at max. power point	32.5	mA/cm²
P_{mpp}	maximum peak power	16.6	mW/cm²
FF	fill factor	> 75	%
η	efficiency	17	%
$\Delta V_{OC}/\Delta T$	open circuit voltage temp. coefficient	-2.1	mV/K
$\Delta J_{SC}/\Delta T$	short circuit current temp. coefficient	0.12	mA/(cm²K)

*) All values measured at Standard Condition: 1 sun (= 1000 W/m²), Air Mass 1.5, 25°C

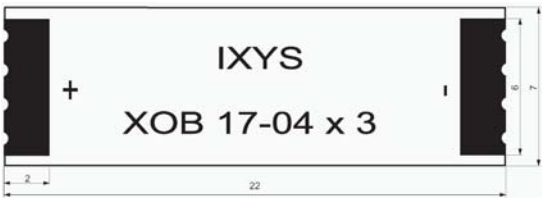

Features

- Monocrystalline silicon technology
- High efficiency outdoor and indoor
- Long life and stable output
- Sealed Package
- Surface Mount Package
- Reflow Solderable
- Very high mechanical robustness

Applications

- Battery chargers for portables such as cell phones, PDAs, GPS-Systems, …
- „Green" electricity generation
- Power backup for UPS, Sensors, Wearables

Advantages

- Automatic Pick & Place Mounting
- One Product for Multiple Applications
- Flexible Integration into the Application

Direct Copper Bonded Ceramic Substrates

DCB and DAB Ceramic Substrates (Al_2O_3 or AlN)

IXYS manufactures **D**irect **C**opper **B**onded substrates on aluminum oxide (Al_2O_3) or aluminum nitride (AlN) base. DCB ceramic substrates form the basis for new product ideas and electronic developments with a high degree of integration.

Standard bonded DCB panel dimensions are:

Unclad aluminum oxide ceramic			
Al_2O_3 content		> 96	%
dimensions		138 x 190.5, 115 x 165*	mm
usable area	max.	130 x 180, 107 x 156*	mm
thickness		1.00, 0.63, 0.38, 0.25	mm
arc through voltage		10	kV
thermal conductivity		> 24	W/m · K
Conduction layers - both sides			
copper thickness		0.3 (< 0.3 on request)	mm
conductor width	min.	0.3 + / - 0.2	mm
conductor spacing	min.	0.4 + / - 0.2	mm
spacing conductor/edge of ceramic	min.	0.35 + / - 0.2	mm
surface finishes available		bare copper; nickel plated; nickel + gold plated	
peel-off resistance (DIN 532282)	min.	9	N/mm
DCB ceramic substrate			
application temperature range		-55...+850	°C
resistant to hydrogen	max. up to	400	°C
thermal expansion coefficient	typical	7.4×10^{-6}	K^{-1}
dimensions according to customer specific drawing			

DCB parts are available as:
- bonded plate
- bonded and patterned plate
- prelasered, unbroken plate
- individuale substrates

ALN - DCB on request

* = (for 0.25 mm thk.)

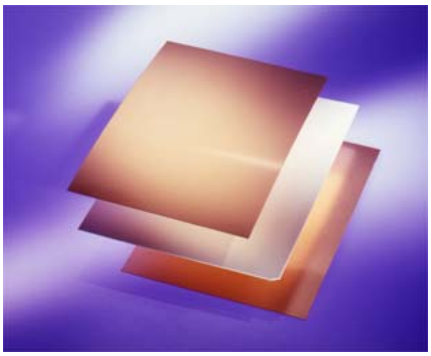

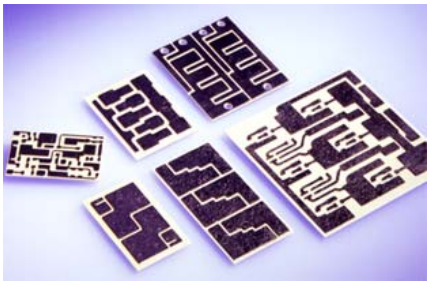

Patterned DCB substrates can be manufactured to customers' drawings.

DCB ceramic substrates fulfill several functions:

- carriers for the semiconductor chips and connection clips
- circuits similar to that on a PC board
- electrical isolator for separating the "current paths" from the "heat paths"
- transfer medium for the heat dissipation from the active parts into the heat sink.

Product Application Notes and Technical Information

WESTCODE

Available from www.westcode.com

- Application dependent gate trigger requirements of GTO thyristors
- The implementation of gate turn-off thyristors as high voltage turn-on switches for pulse power applications
- Improved semiconductor switches for pulse power applications
- Integrated 30kV Solid-State Switch for Pulse Power Applications
- Press-Pack IGBTs, Semiconductor Switches for Pulse Power
- The application of pressure contact IGBTs in pulse power
- Design concepts of a bondless pressure-contact IGBT
- Electromechanical characteristics of a bondless pressure contact IGBT
- Pressure Contacted IGBTs
- Pressure contact IGBT, the ideal switch for high power applications
- Pressure contact IGBT, testing for reliability
- New high current press-pack IGBTs
- Magazine Feature: Positive Development in high reliability completely bond free pressure contact IGBTs
- Application of Press-pack IGBTs in Traction Refurbishment
- New 5.2kV Extra Fast Recovery Diodes for IGBT and IGCT Applications
- New family of 4.5kV Press-Pack IGBTs
- New Extra Fast Soft Recovery Diodes and their Applications
- Managing power semiconductor obsolescence by press-pack IGBT substitution
- Westcode Product Nomenclatures (Capsules, Studs, and Pulse Thyristors)
- Terms & Symbols
- Mounting Instructions
- Press Releases

WESTCODE

Our comprehensive range of rectifier diodes offers class leading performance and reliability. Devices with blocking voltages from 200V up to 6kV and average current ratings up to 8405A, T_K 55°C.

Optimised to offer low conduction losses, these devices are ideally suited to line frequency applications including input rectifiers for variable speed drives, traction converters, trackside substations, welding and DC power supplies.

Utilising compression bonded, alloyed Silicon wafer construction, these devices feature low thermal impedance and high overload capacity and are designed to survive even the most arduous applications.

Rectifier Diodes - Stud Types

Type Part No.	Old part No.	V_{RRM} V	I_{FAV} T_K=55°C A	I_{FSM} 10ms ½ sine $V_R \leq 60\%$ V_{RRM} A	I^2t VR ≤60% V_{RRM} A^2s	V_{T0} @$T_{j\,max}$ V	r_T @$T_{j\,max}$ mΩ	$T_{j\,max}$ °C	R_{thJC} d.c. 180° sine K/W	R_{thJC} 120° Rect. K/W	Fig. No.
W0508SA040	SW04PHN300	400	508	5500	151 x 10^3	0.95	0.75	180	0.13	0.14	W23
W0508SA120	SW12PHN300	1200	508	5500	151 x 10^3	0.95	0.75	180	0.13	0.14	W23
W0508SA150	SW15PHN300	1500	508	5500	151 x 10^3	0.95	0.75	180	0.13	0.14	W23
W0508RA040	SW04PHR300	400	508	5500	151 x 10^3	0.95	0.75	180	0.13	0.14	W23
W0508RA120	SW12PHR300	1200	508	5500	151 x 10^3	0.95	0.75	180	0.13	0.14	W23
W0508RA150	SW15PHR300	1500	508	5500	151 x 10^3	0.95	0.75	180	0.13	0.14	W23
W0508SB040	SW04HHN300	400	508	5500	151 x 10^3	0.95	0.75	180	0.13	0.14	W27
W0508SB120	SW12HHN300	1200	508	5500	151 x 10^3	0.95	0.75	180	0.13	0.14	W27
W0508SB150	SW15HHN300	1500	508	5500	151 x 10^3	0.95	0.75	180	0.13	0.14	W27
W0508RB040	SW04HHR300	400	508	5500	151 x 10^3	0.95	0.75	180	0.13	0.14	W27
W0508RB120	SW12HHR300	1200	508	5500	151 x 10^3	0.95	0.75	180	0.13	0.14	W27
W0508RB150	SW15HHR300	1500	508	5500	151 x 10^3	0.95	0.75	180	0.13	0.14	W27
W0438SC160	SW16PHN320	1600	438	4000	80 x 10^3	1.00	0.83	180	0.15	0.16	W24
W0438SC200	SW20PHN320	2000	438	4000	80 x 10^3	1.00	0.83	180	0.15	0.16	W24
W0438SC240	SW24PHN320	2400	438	4000	80 x 10^3	1.00	0.83	180	0.15	0.16	W24
W0438RC160	SW16PHR320	1600	438	4000	80 x 10^3	1.00	0.83	180	0.15	0.16	W24
W0438RC200	SW20PHR320	2000	438	4000	80 x 10^3	1.00	0.83	180	0.15	0.16	W24
W0438RC240	SW24PHR320	2400	438	4000	80 x 10^3	1.00	0.83	180	0.15	0.16	W24
W0438SD160	SW16HHN320	1600	438	4000	80 x 10^3	1.00	0.83	180	0.15	0.16	W26
W0438SD200	SW20HHN320	2000	438	4000	80 x 10^3	1.00	0.83	180	0.15	0.16	W26
W0438SD240	SW24HHN320	2400	438	4000	80 x 10^3	1.00	0.83	180	0.15	0.16	W26
W0438RD160	SW16HHR320	1600	438	4000	80 x 10^3	1.00	0.83	180	0.15	0.16	W26
W0438RD200	SW20HHR320	2000	438	4000	80 x 10^3	1.00	0.83	180	0.15	0.16	W26
W0438RD240	SW24HHR320	2400	438	4000	80 x 10^3	1.00	0.83	180	0.15	0.16	W26
W0503SC160	SW16PHN380	1600	503	5500	151 x 10^3	0.99	0.74	180	0.13	0.14	W24
W0503SC200	SW20PHN380	2000	503	5500	151 x 10^3	0.99	0.74	180	0.13	0.14	W24
W0503SC240	SW24PHN380	2400	503	5500	151 x 10^3	0.99	0.74	180	0.13	0.14	W24
W0503RC160	SW16PHR380	1600	503	5500	151 x 10^3	0.99	0.74	180	0.13	0.14	W24
W0503RC200	SW20PHR380	2000	503	5500	151 x 10^3	0.99	0.74	180	0.13	0.14	W24
W0503RC240	SW24PHR380	2400	503	5500	151 x 10^3	0.99	0.74	180	0.13	0.14	W24
W0503SD160	SW16HHN380	1600	503	5500	151 x 10^3	0.99	0.74	180	0.13	0.14	W26
W0503SD200	SW20HHN380	2000	503	5500	151 x 10^3	0.99	0.74	180	0.13	0.14	W26
W0503SD240	SW24HHN380	2400	503	5500	151 x 10^3	0.99	0.74	180	0.13	0.14	W26
W0503RD160	SW16HHR380	1600	503	5500	151 x 10^3	0.99	0.74	180	0.13	0.14	W26
W0503RD200	SW20HHR380	2000	503	5500	151 x 10^3	0.99	0.74	180	0.13	0.14	W26
W0503RD240	SW24HHR380	2400	503	5500	151 x 10^3	0.99	0.74	180	0.13	0.14	W26
W0628SA040	SW04PHN400	400	628	7500	280 x 10^3	0.80	0.55	190	0.13	0.14	W23
W0628SA120	SW12PHN400	1200	628	7500	280 x 10^3	0.80	0.55	190	0.13	0.14	W23
W0628SA150	SW15PHN400	1500	628	7500	280 x 10^3	0.80	0.55	190	0.13	0.14	W23
W0628RA040	SW04PHR400	400	628	7500	280 x 10^3	0.80	0.55	190	0.13	0.14	W23
W0628RA120	SW12PHR400	1200	628	7500	280 x 10^3	0.80	0.55	190	0.13	0.14	W23
W0628RA150	SW15PHR400	1500	628	7500	280 x 10^3	0.80	0.55	190	0.13	0.14	W23
W0628SB040	SW04HHN400	400	628	7500	280 x 10^3	0.80	0.55	190	0.13	0.14	W27
W0628SB120	SW12HHN400	1200	628	7500	280 x 10^3	0.80	0.55	190	0.13	0.14	W27
W0628SB150	SW15HHN400	1500	628	7500	280 x 10^3	0.80	0.55	190	0.13	0.14	W27
W0628RB040	SW04HHR400	400	628	7500	280 x 10^3	0.80	0.55	190	0.13	0.14	W27
W0628RB120	SW12HHR400	1200	628	7500	280 x 10^3	0.80	0.55	190	0.13	0.14	W27
W0628RB150	SW15HHR400	1500	628	7500	280 x 10^3	0.80	0.55	190	0.13	0.14	W27
W0735SA040	SW04PHN470	400	735	9000	405 x 10^3	0.79	0.342	190	0.13	0.14	W23
W0735SA120	SW12PHN470	1200	735	9000	405 x 10^3	0.79	0.342	190	0.13	0.14	W23
W0735SA150	SW15PHN470	1500	735	9000	405 x 10^3	0.79	0.342	190	0.13	0.14	W23
W0735RA040	SW04PHR470	400	735	9000	405 x 10^3	0.79	0.342	190	0.13	0.14	W23
W0735RA120	SW12PHR470	1200	735	9000	405 x 10^3	0.79	0.342	190	0.13	0.14	W23
W0735RA150	SW15PHR470	1500	735	9000	405 x 10^3	0.79	0.342	190	0.13	0.14	W23
W0735SB040	SW04HHN470	400	735	9000	405 x 10^3	0.79	0.342	190	0.13	0.14	W27
W0735SB120	SW12HHN470	1200	735	9000	405 x 10^3	0.79	0.342	190	0.13	0.14	W27
W0735SB150	SW15HHN470	1500	735	9000	405 x 10^3	0.79	0.342	190	0.13	0.14	W27
W0735RB040	SW04HHR470	400	735	9000	405 x 10^3	0.79	0.342	190	0.13	0.14	W27
W0735RB120	SW12HHR470	1200	735	9000	405 x 10^3	0.79	0.342	190	0.13	0.14	W27
W0735RB150	SW15HHR470	1500	735	9000	405 x 10^3	0.79	0.342	190	0.13	0.14	W27

Package style

Outline drawings on pages 188 - 224

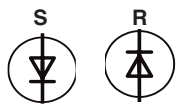

Fig. W23
Weight 250 g

Fig. W24
Weight 250 g

Fig. W26
Weight 200 g

Fig. W27
Weight 200 g

Note: Devices are available with or without sleeving, specified at time of ordering.

WESTCODE

Rectifier Diodes - Capsule Types

Type		V_{RRM}	I_{FAV} T_K=55°C	I_{FSM} 10ms ½ sine $V_R \leq 60\%$ V_{RRM}	I^2t $V_R \leq 60\%$ V_{RRM}	V_{T0} @$T_{j\,max}$	r_T @$T_{j\,max}$	$T_{j\,max}$	R_{thJK} 180° Sine	R_{thJK} 120° Rect.	Fig. No.
Part No.	Old Part No.	V	A	A	A^2s	V	mΩ	°C	K/W	K/W	
W0507YH360	SW36HXC270	3600	507	7600	289×10^3	0.970	0.880	160	0.100	0.117	W3
W0507YH450	SW45HXC270	4500	507	7600	289×10^3	0.970	0.880	160	0.100	0.117	W3
W0614WC160	SW16CXC320	1600	614	4000	80×10^3	1.000	0.830	180	0.090	0.098	W1
W0614WC200	SW20CXC320	2000	614	4000	80×10^3	1.000	0.830	180	0.090	0.098	W1
W0614WC240	SW24CXC320	2400	614	4000	80×10^3	1.000	0.830	180	0.090	0.098	W1
W0642WC160	SW16CXC380	1600	642	5500	151×10^3	0.990	0.740	180	0.090	0.098	W1
W0642WC200	SW20CXC380	2000	642	5500	151×10^3	0.990	0.740	180	0.090	0.098	W1
W0642WC240	SW24CXC380	2400	642	5500	151×10^3	0.990	0.740	180	0.090	0.098	W1
W0646WC060	SW06CXC300	600	646	5500	151×10^3	0.950	0.750	180	0.090	0.098	W1
W0646WC120	SW12CXC300	1200	646	5500	151×10^3	0.950	0.750	180	0.090	0.098	W1
W0646WC150	SW15CXC300	1500	646	5500	151×10^3	0.950	0.750	180	0.090	0.098	W1
W0797WC040	SW04CXC400	400	797	7500	281×10^3	0.800	0.550	190	0.090	0.098	W1
W0797WC120	SW12CXC400	1200	797	7500	281×10^3	0.800	0.550	190	0.090	0.098	W1
W0797WC150	SW15CXC400	1500	797	7500	281×10^3	0.800	0.550	190	0.090	0.098	W1
W0944WC040	SW04CXC470	400	944	9000	405×10^3	0.790	0.342	190	0.090	0.098	W1
W0944WC120	SW12CXC470	1200	944	9000	405×10^3	0.790	0.342	190	0.090	0.098	W1
W0944WC150	SW15CXC470	1500	944	9000	405×10^3	0.790	0.342	190	0.090	0.098	W1
W1032LC500	SW50CXC350	5000	1032	7200	259×10^3	1.000	0.702	150	0.033	0.040	W4
W1032LC560	SW56CXC350	5600	1032	7200	259×10^3	1.000	0.702	150	0.033	0.040	W4
W1032LC600	n/a	6000	1032	7200	259×10^3	1.000	0.702	150	0.033	0.040	W4
W1074YC200	SW20CXC445	2000	1074	10800	583×10^3	0.920	0.390	160	0.050	0.061	W2
W1074YC320	SW32CXC445	3200	1074	10800	583×10^3	0.920	0.390	160	0.050	0.061	W2
W1074YH200	SW20CXC445	2000	1074	10800	583×10^3	0.920	0.390	160	0.050	0.061	W3
W1074YH320	SW32CXC445	3200	1074	10800	583×10^3	0.920	0.390	160	0.050	0.061	W3
W1185LC300	SW30CXC515	3000	1185	9200	423×10^3	1.000	0.575	160	0.033	0.040	W4
W1185LC360	SW36CXC515	3600	1185	9200	423×10^3	1.000	0.575	160	0.033	0.040	W4
W1185LC450	SW45CXC515	4500	1185	9200	423×10^3	1.000	0.575	160	0.033	0.040	W4
W1263YC160	SW16CXC565	1600	1263	11700	684×10^3	0.870	0.330	175	0.050	0.061	W2
W1263YC250	SW25CXC565	2500	1263	11700	684×10^3	0.870	0.330	175	0.050	0.061	W2
W1263YH160	SW16CXC565	1600	1263	11700	684×10^3	0.870	0.330	175	0.050	0.061	W3
W1263YH250	SW25CXC565	2500	1263	11700	684×10^3	0.870	0.330	175	0.050	0.061	W3
W1294NC500	SW50CXC500	5000	1294	10000	500×10^3	1.150	0.684	150	0.022	0.026	W5
W1294NC600	SW60CXC500	6000	1294	10000	500×10^3	1.150	0.684	150	0.022	0.026	W5
W1411LC300	SW30CXC595	3000	1411	10600	562×10^3	0.900	0.388	160	0.033	0.040	W4
W1411LC360	SW36CXC595	3600	1411	10600	562×10^3	0.900	0.388	160	0.033	0.040	W4
W1520NC500	SW50CXC620	5000	1520	12000	720×10^3	1.150	0.450	150	0.022	0.026	W5
W1520NC600	SW60CXC620	6000	1520	12000	720×10^3	1.150	0.450	150	0.022	0.026	W5
W1524LC240	SW24CXC635	2400	1524	12700	810×10^3	0.870	0.323	160	0.033	0.040	W4
W1524LC300	SW30CXC635	3000	1524	12700	810×10^3	0.870	0.323	160	0.033	0.040	W4
W1608NC400	SW40CXC680	4000	1608	13000	850×10^3	0.975	0.501	160	0.022	0.026	W5
W1608NC500	SW50CXC680	5000	1608	13000	850×10^3	0.975	0.501	160	0.022	0.026	W5
W1748LC080	SW08CXC805	800	1748	15400	1.19×10^6	0.870	0.280	175	0.033	0.040	W4
W1748LC180	SW18CXC805	1800	1748	15400	1.19×10^6	0.870	0.280	175	0.033	0.040	W4
W1748LC220	SW22CXC805	2200	1748	15400	1.19×10^6	0.870	0.280	175	0.033	0.040	W4
W1856NC400	SW40CXC815	4000	1856	16000	1.28×10^6	0.975	0.348	160	0.022	0.026	W5
W1856NC500	SW50CXC815	5000	1856	16000	1.28×10^6	0.975	0.348	160	0.022	0.026	W5
W2020NC360	SW36CXC818	3600	2020	18000	1.62×10^6	1.000	0.320	160	0.020	0.022	W5
W2020NC450	SW45CXC818	4500	2020	18000	1.62×10^6	1.000	0.320	160	0.020	0.022	W5
W2052NC300	SW30CXC820	3000	2052	19500	1.90×10^6	0.865	0.288	160	0.022	0.026	W5
W2052NC400	SW40CXC820	4000	2052	19500	1.90×10^6	0.865	0.288	160	0.022	0.026	W5
W2054NC360	SW36CXC920	3600	2054	19000	1.81×10^6	0.800	0.300	160	0.022	0.026	W5
W2054NC450	SW45CXC920	4500	2054	19000	1.81×10^6	0.800	0.300	160	0.022	0.026	W5
W2058LC020	SW02CXC935	200	2058	19500	1.90×10^6	0.790	0.192	175	0.033	0.040	W4
W2058LC100	SW10CXC935	1000	2058	19500	1.90×10^6	0.790	0.192	175	0.033	0.040	W4
W2058LC120	SW12CXC935	1200	2058	19500	1.90×10^6	0.790	0.192	175	0.033	0.040	W4

Outline drawings on pages 188 - 224

Rectifier Diodes - Capsule Types, continued

Type ➤ New Part No.	Old Part No.	V_{RRM} V	I_{FAV} T_K=55°C A	I_{FSM} 10ms ½ sine $V_R \leq 60\%$ V_{RRM} A	I^2t $V_R \leq 60\%$ V_{RRM} A^2s	V_{T0} @$T_{j\,max}$ V	r_T @$T_{j\,max}$ mΩ	$T_{j\,max}$ °C	R_{thJK} 180° Sine K/W	R_{thJK} 120° Rect. K/W	Fig. No.
W2134NC300	SW30CXC930	3000	2134	20000	2.00×10^6	0.865	0.260	160	0.022	0.026	W5
W2134NC400	SW40CXC930	4000	2134	20000	2.00×10^6	0.865	0.260	160	0.022	0.026	W5
W2416NC160	SW16CXC950	1600	2416	25500	3.25×10^6	0.780	0.200	160	0.022	0.026	W5
W2416NC200	SW20CXC950	2000	2416	25500	3.25×10^6	0.780	0.200	160	0.022	0.026	W5
W2416NC250	SW25CXC950	2500	2416	25500	3.25×10^6	0.780	0.200	160	0.022	0.026	W5
W2624NC160	SW16CXC11C	1600	2624	28000	3.92×10^6	0.780	0.160	160	0.022	0.026	W5
W2624NC200	SW20CXC11C	2000	2624	28000	3.92×10^6	0.780	0.160	160	0.022	0.026	W5
W2624NC250	SW25CXC11C	2500	2624	28000	3.92×10^6	0.780	0.160	160	0.022	0.026	W5
W2664NC300	SW30CXC1170	3000	2664	26500	3.51×10^6	0.824	0.174	160	0.020	0.022	W5
W2664NC400	SW40CXC1170	4000	2664	26500	3.51×10^6	0.824	0.174	160	0.020	0.022	W5
W2820VC360	SW36CXC1100	3600	2820	26200	3.43×10^6	1.300	0.147	160	0.016	0.018	W6
W2820VC450	SW45CXC1100	4500	2820	26200	3.43×10^6	1.300	0.147	160	0.016	0.018	W6
W2820VF360	SW36FXC1100	3600	2820	26200	3.43×10^6	1.300	0.147	160	0.016	0.018	W43
W2820VF450	SW45FXC1100	4500	2820	26200	3.43×10^6	1.300	0.147	160	0.016	0.018	W43
W2958NC280	SW28CXC12C	2800	2958	28000	3.92×10^6	0.807	0.167	175	0.020	0.022	W5
W2958NC350	SW35CXC12C	3500	2958	28000	3.92×10^6	0.807	0.167	175	0.020	0.022	W5
W3128VC300	SW30CXC13C	3000	3128	30000	4.50×10^6	0.875	0.158	160	0.016	0.018	W6
W3128VC400	SW40CXC13C	4000	3128	30000	4.50×10^6	0.875	0.158	160	0.016	0.018	W6
W3128VF300	SW30FXC13C	3000	3128	30000	4.50×10^6	0.875	0.158	160	0.016	0.018	W43
W3128VF400	SW40FXC13C	4000	3128	30000	4.50×10^6	0.875	0.158	160	0.016	0.018	W43
W3270NC080	SW08CXC14C	800	3270	33000	5.45×10^6	0.826	0.104	175	0.022	0.026	W5
W3270NC160	SW16CXC14C	1600	3270	33000	5.45×10^6	0.826	0.104	175	0.022	0.026	W5
W3270NC200	SW20CXC14C	2000	3270	33000	5.45×10^6	0.826	0.104	175	0.022	0.026	W5
W3697VC160	SW16CXC16C	1600	3697	40000	8.00×10^6	0.860	0.100	160	0.016	0.018	W6
W3697VC220	SW22CXC16C	2200	3697	40000	8.00×10^6	0.860	0.100	160	0.016	0.018	W6
W3697VC280	SW28CXC16C	2800	3697	40000	8.00×10^6	0.860	0.100	160	0.016	0.018	W6
W3697VF160	SW16FXC16C	1600	3697	40000	8.00×10^6	0.860	0.100	160	0.016	0.018	W43
W3697VF220	SW22FXC16C	2200	3697	40000	8.00×10^6	0.860	0.100	160	0.016	0.018	W43
W3697VF280	SW28FXC16C	2800	3697	40000	8.00×10^6	0.860	0.100	160	0.016	0.018	W43
W3743ZC400	SW40CXC15C	4000	3743	35000	6.13×10^6	0.976	0.170	160	0.011	0.012	W7
W3743ZC500	SW50CXC15C	5000	3743	35000	6.13×10^6	0.976	0.170	160	0.011	0.012	W7
W3743ZD400	SW40DXC15C	4000	3743	35000	6.13×10^6	0.976	0.170	160	0.011	0.012	W42
W3743ZD500	SW50DXC15C	5000	3743	35000	6.13×10^6	0.976	0.170	160	0.011	0.012	W42
➤ W3841VC300	SW30CXC17C	3000	3841	39800	7.92×10^6	0.860	0.115	175	0.016	0.018	W6
➤ W3841VC340	SW34CXC17C	3400	3841	39800	7.92×10^6	0.860	0.115	175	0.016	0.018	W6
➤ W3841VF300	SW30FXC17C	3000	3841	39800	7.92×10^6	0.860	0.115	175	0.016	0.018	W43
➤ W3841VF340	SW34FXC17C	3400	3841	39800	7.92×10^6	0.860	0.115	175	0.016	0.018	W43
W4096ZC340	SW34CXC1870	3400	4096	41700	8.70×10^6	0.730	0.158	160	0.011	0.012	W7
W4096ZC450	SW45CXC1870	4500	4096	41700	8.70×10^6	0.730	0.158	160	0.011	0.012	W7
W4096ZD340	SW34DXC1870	3400	4096	41700	8.70×10^6	0.730	0.158	160	0.011	0.012	W42
W4096ZD450	SW45DXC1870	4500	4096	41700	8.70×10^6	0.730	0.158	160	0.011	0.012	W42
W4307ZC200	SW20CXC20C	2000	4307	55000	15.1×10^6	0.800	0.133	160	0.011	0.012	W7
W4307ZC240	SW24CXC20C	2400	4307	55000	15.1×10^6	0.800	0.133	160	0.011	0.012	W7
W4307ZC300	SW30CXC20C	3000	4307	55000	15.1×10^6	0.800	0.133	160	0.011	0.012	W7
W4307ZD200	SW20DXC20C	2000	4307	55000	15.1×10^6	0.800	0.133	160	0.011	0.012	W42
W4307ZD240	SW24DXC20C	2400	4307	55000	15.1×10^6	0.800	0.133	160	0.011	0.012	W42
W4307ZD300	SW30DXC20C	3000	4307	55000	15.1×10^6	0.800	0.133	160	0.011	0.012	W42
W4534NC020	SW02CXC19C	200	4543	40000	8.00 x 106	0.765	0.052	190	0.022	0.026	W5
W4534NC060	SW06CXC19C	600	4543	40000	8.00 x 106	0.765	0.052	190	0.022	0.026	W5
W5092ZC240	SW24CXC18C	2400	5092	58000	16.8×10^6	0.874	0.079	160	0.011	0.012	W7
W5092ZC280	SW28CXC18C	2800	5092	58000	16.8×10^6	0.874	0.079	160	0.011	0.012	W7
W5092ZC350	SW35CXC18C	3500	5092	58000	16.8×10^6	0.874	0.079	160	0.011	0.012	W7
W5092ZD240	SW24DXC18C	2400	5092	58000	16.8×10^6	0.874	0.079	160	0.011	0.012	W42
W5092ZD280	SW28DXC18C	2800	5092	58000	16.8×10^6	0.874	0.079	160	0.011	0.012	W42
W5092ZD350	SW35DXC18C	3500	5092	58000	16.8×10^6	0.874	0.079	160	0.011	0.012	W42

Outline drawings on pages 188 - 224

Rectifier Diodes - Capsule Types, continued

Type ➤ New Part No.	Old Part No.	V_{RRM} V	I_{FAV} T_K=55°C A	I_{FSM} 10ms ½ sine $V_R \leq 60\%$ V_{RRM} A	I^2t $V_R \leq 60\%$ V_{RRM} A^2s	V_{T0} @$T_{j\,max}$ V	r_T @$T_{j\,max}$ mΩ	$T_{j\,max}$ °C	R_{thJK} 180° Sine K/W	R_{thJK} 120° Rect. K/W	Fig. No.
W5282ZC200	SW20CXC21C	2000	5282	60000	18.0×10^6	0.970	0.064	160	0.011	0.012	W7
W5282ZC240	SW24CXC21C	2400	5282	60000	18.0×10^6	0.970	0.064	160	0.011	0.012	W7
W5282ZC300	SW30CXC21C	3000	5282	60000	18.0×10^6	0.970	0.064	160	0.011	0.012	W7
W5282ZD200	SW20DXC21C	2000	5282	60000	18.0×10^6	0.970	0.064	160	0.011	0.012	W42
W5282ZD240	SW24DXC21C	2400	5282	60000	18.0×10^6	0.970	0.064	160	0.011	0.012	W42
W5282ZD300	SW30DXC21C	3000	5282	60000	18.0×10^6	0.970	0.064	160	0.011	0.012	W42
➤ W5292TC500	N/A	5000	5292	52700	13.9×10^6	1.027	0.111	160	0.008	0.0085	W14
➤ W5292TC560	N/A	5600	5292	52700	13.9×10^6	1.027	0.111	160	0.008	0.0085	W14
➤ W5292TD500	N/A	5000	5292	52700	13.9×10^6	1.027	0.111	160	0.008	0.0085	W19
➤ W5292TD560	N/A	5600	5292	52700	13.9×10^6	1.027	0.111	160	0.008	0.0085	W19
W5439VC020	SW02CXC22C	200	5439	52000	13.5×10^6	0.650	0.067	190	0.016	0.018	W6
W5439VC100	SW10CXC22C	1000	5439	52000	13.5×10^6	0.650	0.067	190	0.016	0.018	W6
W5439VC140	SW14CXC22C	1400	5439	52000	13.5×10^6	0.650	0.067	190	0.016	0.018	W6
W5439VF020	SW02FXC22C	200	5439	52000	13.5×10^6	0.650	0.067	190	0.016	0.018	W43
W5439VF100	SW10FXC22C	1000	5439	52000	13.5×10^6	0.650	0.067	190	0.016	0.018	W43
W5439VF140	SW14FXC22C	1400	5439	52000	13.5×10^6	0.650	0.067	190	0.016	0.018	W43
W5696VC020	SW02CXC27C	200	5696	53000	14.0×10^6	0.650	0.059	190	0.016	0.018	W6
W5696VC100	SW10CXC27C	1000	5696	53000	14.0×10^6	0.650	0.059	190	0.016	0.018	W6
W5696VC140	SW14CXC27C	1400	5696	53000	14.0×10^6	0.650	0.059	190	0.016	0.018	W6
W5696VF020	SW02FXC27C	200	5696	53000	14.0×10^6	0.650	0.059	190	0.016	0.018	W43
W5696VF100	SW10FXC27C	1000	5696	53000	14.0×10^6	0.650	0.059	190	0.016	0.018	W43
W5696VF140	SW14FXC27C	1400	5696	53000	14.0×10^6	0.650	0.059	190	0.016	0.018	W43
W5838ZC120	SW12CXC26C	1200	5838	64000	20.5×10^6	0.800	0.074	175	0.011	0.012	W7
W5838ZC180	SW18CXC26C	1800	5838	64000	20.5×10^6	0.800	0.074	175	0.011	0.012	W7
W5838ZC220	SW22CXC26C	2200	5838	64000	20.5×10^6	0.800	0.074	175	0.011	0.012	W7
W5838ZD120	SW12DXC26C	1200	5838	64000	20.5×10^6	0.800	0.074	175	0.011	0.012	W42
W5838ZD180	SW18DXC26C	1800	5838	64000	20.5×10^6	0.800	0.074	175	0.011	0.012	W42
W5838ZD220	SW22DXC26C	2200	5838	64000	20.5×10^6	0.800	0.074	175	0.011	0.012	W42
W6262ZC120	SW12CXC2850	1200	6262	67000	22.4×10^6	0.740	0.065	175	0.011	0.012	W7
W6262ZC200	SW20CXC2850	2000	6262	67000	22.4×10^6	0.740	0.065	175	0.011	0.012	W7
W6262ZC240	SW24CXC2850	2400	6262	67000	22.4×10^6	0.740	0.065	175	0.011	0.012	W7
W6262ZD120	SW12DXC2850	1200	6262	67000	22.4×10^6	0.740	0.065	175	0.011	0.012	W42
W6262ZD200	SW20DXC2850	2000	6262	67000	22.4×10^6	0.740	0.065	175	0.011	0.012	W42
W6262ZD240	SW24DXC2850	2400	6262	67000	22.4×10^6	0.740	0.065	175	0.011	0.012	W42
W7675ZC020	SW02CXC30C	200	7675	68000	23.1×10^6	0.650	0.050	190	0.011	0.012	W7
W7675ZC100	SW10CXC30C	1000	7675	68000	23.1×10^6	0.650	0.050	190	0.011	0.012	W7
W7675ZC140	SW14CXC30C	1400	7675	68000	23.1×10^6	0.650	0.050	190	0.011	0.012	W7
W7675ZD020	SW02DXC30C	200	7675	68000	23.1×10^6	0.650	0.050	190	0.011	0.012	W42
W7675ZD100	SW10DXC30C	1000	7675	68000	23.1×10^6	0.650	0.050	190	0.011	0.012	W42
W7675ZD140	SW14DXC30C	1400	7675	68000	23.1×10^6	0.650	0.050	190	0.011	0.012	W42
W8405ZC020	SW02CXC32C	200	8405	72000	25.9×10^6	0.670	0.038	190	0.011	0.012	W7
W8405ZC100	SW10CXC32C	1000	8405	72000	25.9×10^6	0.670	0.038	190	0.011	0.012	W7
W8405ZC140	SW14CXC32C	1400	8405	72000	25.9×10^6	0.670	0.038	190	0.011	0.012	W7
W8405ZD020	SW02DXC32C	200	8405	72000	25.9×10^6	0.670	0.038	190	0.011	0.012	W42
W8405ZD100	SW10DXC32C	1000	8405	72000	25.9×10^6	0.670	0.038	190	0.011	0.012	W42
W8405ZD140	SW14DXC32C	1400	8405	72000	25.9×10^6	0.670	0.038	190	0.011	0.012	W42

Outline drawings on pages 188 - 224

WESTCODE

Rectifier Diodes - Capsule Types, continued

Fig. W1
Weight 70g

Fig. W2
Weight 90 g

Fig. W3
Weight 140 g

Fig. W4
Weight 340 g

Fig. W5
Weight 510 g

Fig. W6
Weight 1000 g

Fig. W7
Weight 1700 g

Fig. W28
Weight1230 g

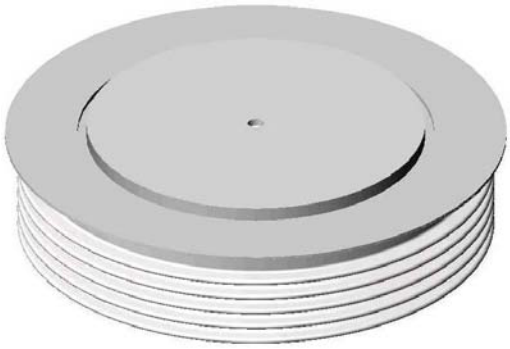

Fig. W29
Weight 1700 g

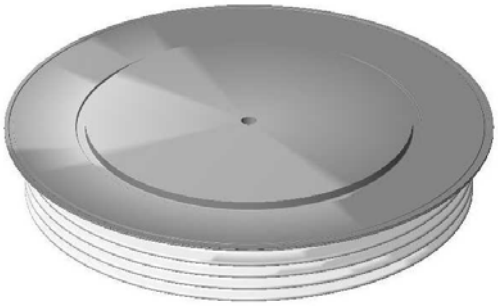

Fig. W42
Weight 1200 g

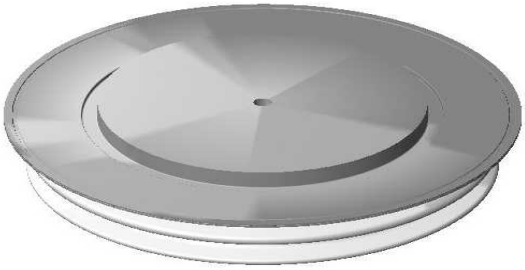

Fig. W43
Weight 800 g

Fast Recovery Diodes

WESTCODE

Fast Recovery Diodes are an essential complement to any switching device and are more often than not the limiting factor in the design and performance of modern power converters. To address the needs of our customers, we have developed an unparalleled range of Fast Recovery Diodes.

These diodes are available with blocking voltages up to 6kV making them suitable for operation with DC link voltages up to 3.3kV and average current ratings to 4kA depending upon type. The devices utilise compression bonding along with both alloyed and floating silicon technologies to deliver robust devices that you can rely on in demanding applications.

This range has been re-classified as follows to aid appropriate device selection; ***Fast Recovery, Soft Recovery, Extra Fast Recovery Diodes and HP Sonic-FRDs™.***

Fast Recovery Diodes: These parts are particularly suitable for use as antiparallel diodes in Gate Turn-Off thyristors and Fast Thyristor inverters, and as series and freewheel diodes for choppers.

Fast Recovery Diodes - Stud Types

Type		V_{RRM}	I_{FAV} T_K= 55°C	I_{FSM} 10ms ½ sine $V_R \leq 60\%$ V_{RRM}	I^2t $V_R \leq 60\%$ V_{RRM}	Typ. Reverse Recovery Parameters $T_{j\,max}$ (50% Chord)				V_{T0} @$T_{j\,max}$	r_T @$T_{j\,max}$	$T_{j\,max}$	R_{thJC} d.c. 180° sine	Fig. No.
➤ New Part No.	Old Part No.	V	A	A	A^2s	t_{rr} µs	Q_r µC	@I_{FM} A	@-di_F/dt A/µs	V	mΩ	°C	K/W	
M0130SL200	SM20MCN094	2000	130	2240	25×10^3	2.60	240	1000	150	1.290	1.540	125	0.300	W20
M0130SL250	SM25MCN094	2500	130	2240	25×10^3	2.60	240	1000	150	1.290	1.540	125	0.300	W20
M0130RL200	SM20MCR094	2000	130	2240	25×10^3	2.60	240	1000	150	1.290	1.540	125	0.300	W20
M0130RL250	SM25MCR094	2500	130	2240	25×10^3	2.60	240	1000	150	1.290	1.540	125	0.300	W20
➤ M0130SM200	N/A	2000	130	2240	25×10^3	2.60	240	1000	150	1.290	1.540	125	0.300	W21
➤ M0130SM250	N/A	2500	130	2240	25×10^3	2.60	240	1000	150	1.290	1.540	125	0.300	W21
➤ M0130RM200	N/A	2000	130	2240	25×10^3	2.60	240	1000	150	1.290	1.540	125	0.300	W21
➤ M0130RM250	N/A	2500	130	2240	25×10^3	2.60	240	1000	150	1.290	1.540	125	0.300	W21
➤ M0139SL120	N/A	1200	139	2450	30×10^3	1.00	70	1000	100	1.240	1.280	125	0.300	W20
➤ M0139SL180	N/A	1800	139	2450	30×10^3	1.00	70	1000	100	1.240	1.280	125	0.300	W20
➤ M0139RL120	N/A	1200	139	2450	30×10^3	1.00	70	1000	100	1.240	1.280	125	0.300	W20
➤ M0139RL180	N/A	1800	139	2450	30×10^3	1.00	70	1000	100	1.240	1.280	125	0.300	W20
M0139SM120	SM12PHN100	1200	139	2450	30×10^3	1.00	70	1000	100	1.240	1.280	125	0.300	W21
M0139SM180	SM18PHN100	1800	139	2450	30×10^3	1.00	70	1000	100	1.240	1.280	125	0.300	W21
M0139RM120	SM12PHR100	1200	139	2450	30×10^3	1.00	70	1000	100	1.240	1.280	125	0.300	W21
M0139RM180	SM18PHR100	1800	139	2450	30×10^3	1.00	70	1000	100	1.240	1.280	125	0.300	W21
M0268SC200	SM20PHN134	2000	268	4250	90.3×10^3	2.80	230	1000	150	1.210	1.200	125	0.130	W24
M0268SC250	SM25PHN134	2500	268	4250	90.3×10^3	2.80	230	1000	150	1.210	1.200	125	0.130	W24
M0268RC200	SM20PHR134	2000	268	4250	90.3×10^3	2.80	230	1000	150	1.210	1.200	125	0.130	W24
M0268RC250	SM25PHR134	2500	268	4250	90.3×10^3	2.80	230	1000	150	1.210	1.200	125	0.130	W24
M0268SJ200	SM20PCN134	2000	268	4250	90.3×10^3	2.80	230	1000	150	1.210	1.200	125	0.130	W22
M0268SJ250	SM25PCN134	2500	268	4250	90.3×10^3	2.80	230	1000	150	1.210	1.200	125	0.130	W22
M0268RJ200	SM20PCR134	2000	268	4250	90.3×10^3	2.80	230	1000	150	1.210	1.200	125	0.130	W22
M0268RJ250	SM25PCR134	2500	268	4250	90.3×10^3	2.80	230	1000	150	1.210	1.200	125	0.130	W22
M0280SC200	SM20PHN144	2000	280	4500	100×10^3	2.80	342	1000	150	1.280	0.920	125	0.130	W24
M0280SC250	SM25PHN144	2500	280	4500	100×10^3	2.80	342	1000	150	1.280	0.920	125	0.130	W24
M0280RC200	SM20PHR144	2000	280	4500	100×10^3	2.80	342	1000	150	1.280	0.920	125	0.130	W24
M0280RC250	SM25PHR144	2500	280	4500	100×10^3	2.80	342	1000	150	1.280	0.920	125	0.130	W24
M0280SJ200	SM20PCN144	2000	280	4500	100×10^3	2.80	342	1000	150	1.280	0.920	125	0.130	W22
M0280SJ250	SM25PCN144	2500	280	4500	100×10^3	2.80	342	1000	150	1.280	0.920	125	0.130	W22
M0280RJ200	SM20PCR144	2000	280	4500	100×10^3	2.80	342	1000	150	1.280	0.920	125	0.130	W22
M0280RJ250	SM25PCR144	2500	280	4500	100×10^3	2.80	342	1000	150	1.280	0.920	125	0.130	W22
M0334SC120	SM12PHN174	1200	334	4500	101×10^3	3.50	160	550	40	1.000	0.740	125	0.130	W24
M0334SC200	SM20PHN174	2000	334	4500	101×10^3	3.50	160	550	40	1.000	0.740	125	0.130	W24
M0334RC120	SM12PHR174	1200	334	4500	101×10^3	3.50	160	550	40	1.000	0.740	125	0.130	W24
M0334RC200	SM20PHR174	2000	334	4500	101×10^3	3.50	160	550	40	1.000	0.740	125	0.130	W24
M0334SJ120	N/A	1200	334	4500	101×10^3	3.50	160	550	40	1.000	0.740	125	0.130	W22
M0334SJ200	N/A	2000	334	4500	101×10^3	3.50	160	550	40	1.000	0.740	125	0.130	W22
M0334RJ120	N/A	1200	334	4500	101×10^3	3.50	160	550	40	1.000	0.740	125	0.130	W22
M0334RJ200	N/A	2000	334	4500	101×10^3	3.50	160	550	40	1.000	0.740	125	0.130	W22
M0336SA120	SM12PHN170	1200	336	4500	101×10^3	3.00	75	550	40	1.020	0.700	125	0.130	W23
M0336SA140	SM14PHN170	1400	336	4500	101×10^3	3.00	75	550	40	1.020	0.700	125	0.130	W23
M0336RA120	SM12PHR170	1200	336	4500	101×10^3	3.00	75	550	40	1.020	0.700	125	0.130	W23
M0336RA140	SM14PHR170	1400	336	4500	101×10^3	3.00	75	550	40	1.020	0.700	125	0.130	W23

S R

Fig. W20 - 85 g

Fig. W21 - min. 85 g

Fig. W22 - 200 g

Fig. W23 - 250 g

Fig. W24 - 250 g

Outlines on pages 188 - 224

WESTCODE

Fast Recovery Diodes - Capsule Types

Type		V_{RRM}	I_{FAV} T_K=55°C	I_{FSM} 10ms ½ sine $V_R \leq 60\%$ V_{RRM}	I^2t $V_R \leq 60\%$ V_{RRM}	Typ. Reverse Recovery Parameters T_{JM} (50% Chord)				V_{T0} @$T_{j\,max}$	r_T @$T_{j\,max}$	$T_{j\,max}$	R_{thJK} d.c. 180° sine	Fig. No.
Part No.	Old Part No.	V	A	A	A^2s	t_{rr} µs	Q_r µC	@I_{FM} A	@-di_F/dt A/µs	V	mΩ	°C	K/W	
M0588LC400	SM40CXC344	4000	588	3955	78.2×10^3	3.5	200	1000	60	2.32	1.77	150	0.033	W4
M0588LC450	SM45CXC344	4500	588	3955	78.2×10^3	3.5	200	1000	60	2.32	1.77	150	0.033	W4
M0790YC200	N/A	2000	790	9000	405×10^3	4.0	300	1000	60	1.27	0.58	150	0.050	W2
M0790YC250	N/A	2500	790	9000	405×10^3	4.0	300	1000	60	1.27	0.58	150	0.050	W2
M0790YH200	N/A	2000	790	9000	405×10^3	4.0	300	1000	60	1.27	0.58	150	0.050	W3
M0790YH250	N/A	2500	790	9000	405×10^3	4.0	300	1000	60	1.27	0.58	150	0.050	W3
M0914LC200	SM20CXC804	2000	914	8500	361×10^3	3.2	170	1000	60	1.768	0.653	150	0.032	W4
M0914LC250	SM25CXC804	2500	914	8500	361×10^3	3.2	170	1000	60	1.768	0.653	150	0.032	W4
M1010NC400	SM40CXC604	4000	1010	9600	461×10^3	3.2	700	1000	200	1.70	1.03	150	0.022	W5
M1010NC450	SM45CXC604	4500	1010	9600	461×10^3	3.2	700	1000	200	1.70	1.03	150	0.022	W5
M1163NC400	SM40CXC614	4000	1163	10800	583×10^3	6.4	700	1000	60	1.50	0.77	150	0.022	W5
M1163NC450	SM45CXC614	4500	1163	10800	583×10^3	6.4	700	1000	60	1.50	0.77	150	0.022	W5
M1502NC200	SM20CXC334	2000	1502	17000	1.45×10^6	2.3	420	1000	60	1.24	0.44	150	0.022	W5
M1502NC250	SM25CXC334	2500	1502	17000	1.45×10^6	2.3	420	1000	60	1.24	0.44	150	0.022	W5
M1583VC400	SM40CXC864	4000	1583	24800	3.08×10^6	5.0	1100	1000	200	1.69	0.53	150	0.016	W6
M1583VC450	SM45CXC864	4500	1583	24800	3.08×10^6	5.0	1100	1000	200	1.69	0.53	150	0.016	W6
M1583VF400	SM40FXC864	4000	1583	24800	3.08×10^6	5.0	1100	1000	200	1.69	0.53	150	0.016	W43
M1583VF450	SM45FXC864	4500	1583	24800	3.08×10^6	5.0	1100	1000	200	1.69	0.53	150	0.016	W43
M1609NC200	SM20CXC915	2000	1609	17500	1.53×10^6	3.2	600	1000	200	1.31	0.35	150	0.022	W5
M1609NC260	SM26CXC915	2600	1609	17500	1.53×10^6	3.2	600	1000	200	1.31	0.35	150	0.022	W5
M2408NC020	SM02CXC504	200	2408	24000	2.88×10^6	1.9	160	1000	200	1.07	0.12	150	0.022	W5
M2408NC060	SM06CXC504	600	2408	24000	2.88×10^6	1.9	160	1000	200	1.07	0.12	150	0.022	W5
M2408ND020	SM02CXC504	200	2408	24000	2.88×10^6	1.9	160	1000	200	1.07	0.12	150	0.022	W5
M2408ND060	SM06CXC504	600	2408	24000	2.88×10^6	1.9	160	1000	200	1.07	0.12	150	0.022	W5
M2639ZC360	SM36CXC954	3600	2639	27520	3.79×10^6	8.5	1200	1000	60	1.38	0.29	150	0.011	W7
M2639ZC420	SM42CXC954	4200	2639	27520	3.79×10^6	8.5	1200	1000	60	1.38	0.29	150	0.011	W7
M2639ZD360	SM36DXC954	3600	2639	27520	3.79×10^6	8.5	1200	1000	60	1.38	0.29	150	0.011	W42
M2639ZD420	SM42DXC954	4200	2639	27520	3.79×10^6	8.5	1200	1000	60	1.38	0.29	150	0.011	W42
M2698ZC250	SM25CXC964	2500	2698	27800	3.86×10^6	6.2	620	1000	60	1.00	0.33	150	0.011	W7
M2698ZC280	SM28CXC964	2800	2698	27800	3.86×10^6	6.2	620	1000	60	1.00	0.33	150	0.011	W7
M2698ZC350	SM35CXC964	3500	2698	27800	3.86×10^6	6.2	620	1000	60	1.00	0.33	150	0.011	W7
M2698ZD250	SM25DXC964	2500	2698	27800	3.86×10^6	6.2	620	1000	60	1.00	0.33	150	0.011	W42
M2698ZD280	SM28DXC964	2800	2698	27800	3.86×10^6	6.2	620	1000	60	1.00	0.33	150	0.011	W42
M2698ZD350	SM35DXC964	3500	2698	27800	3.86×10^6	6.2	620	1000	60	1.00	0.33	150	0.011	W42
M2837VC180	SM18CXC968	1800	2837	31800	5.1×10^6	7.0	1100	1000	60	0.90	0.17	150	0.016	W6
M2837VC250	SM25CXC968	2500	2837	31800	5.1×10^6	7.0	1100	1000	60	0.90	0.17	150	0.016	W6
M2837VF180	SM18FXC968	1800	2837	31800	5.1×10^6	7.0	1100	1000	60	0.90	0.17	150	0.016	W43
M2837VF250	SM25FXC968	2500	2837	31800	5.1×10^6	7.0	1100	1000	60	0.90	0.17	150	0.016	W43
M3770ZC200	SM20CXC974	2000	3770	44000	9.68×10^6	7.0	1500	1000	60	1.19	1.18	150	0.011	W7
M3770ZC240	SM24CXC974	2400	3770	44000	9.68×10^6	7.0	1500	1000	60	1.19	1.18	150	0.011	W7
M3770ZC300	SM30CXC974	3000	3770	44000	9.68×10^6	7.0	1500	1000	60	1.19	1.18	150	0.011	W7
M3770ZD200	SM20DXC974	2000	3770	44000	9.68×10^6	7.0	1500	1000	60	1.19	1.18	150	0.011	W42
M3770ZD240	SM24DXC974	2400	3770	44000	9.68×10^6	7.0	1500	1000	60	1.19	1.18	150	0.011	W42
M3770ZD300	SM30DXC974	3000	3770	44000	9.68×10^6	7.0	1500	1000	60	1.190	1.18	150	0.011	W42

Fig. W2 - 80 g

Fig. W3 - 140 g

Fig. W4 - 340 g

Fig. W5 - 510 g

Fig. W6 - 1000 g

Fig. W7 - 1700 g

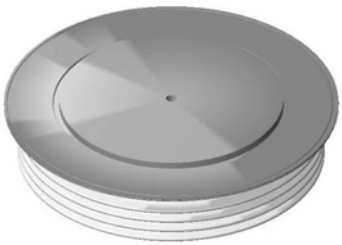

Fig. W42 - 1200 g

Fig. W43 - 800 g

Outlines on pages 188 - 224

Soft Recovery Diodes - Capsule Types

These parts are particularly suitable where soft recovery is required, such as RCD snubber, voltage clamping and snubberless applications.

Type		V_{RRM}	I_{FAV}	I_{FSM}	I^2t	Typ. Reverse Recovery Parameters				V_{T0}	r_T	$T_{j\,max}$	R_{thJK}	Fig. No.
			T_K= 55°C	10ms ½ sine $V_R \leq 60\%\ V_{RRM}$	$V_R \leq 60\%$ V_{RRM}	$T_{j\,max}$ (50% Chord)				@$T_{j\,max}$			d.c. 180° sine	
Part No.	Old Part No.	V	A	A	A^2s	t_{rr} µs	Q_r µC	@I_{FM} A	@-di_F/dt A/µs	V	mΩ	°C	K/W	
M0225YH300	SM30HXC084	3000	225	2000	20×10^3	3.00	100	550	40	1.900	4.160	150	0.100	W3
M0225YH360	SM36HXC084	3600	225	2000	20×10^3	3.00	100	550	40	1.900	4.160	150	0.100	W3
M0225YH450	SM45HXC084	4500	225	2000	20×10^3	3.00	100	550	40	1.900	4.160	150	0.100	W3
M0310YH300	SM30HXC103	3000	310	4590	105×10^3	2.80	210	1000	100	1.490	2.060	150	0.100	W3
M0310YH350	SM35HXC103	3500	310	4590	105×10^3	2.80	210	1000	100	1.490	2.060	150	0.100	W3
M0347WC160	SM16CXC134	1600	347	4250	90.3×10^3	2.80	60	550	40	1.210	1.200	125	0.090	W1
M0347WC200	SM20CXC134	2000	347	4250	90.3×10^3	2.80	60	550	40	1.210	1.200	125	0.090	W1
M0347WC250	SM25CXC134	2500	347	4250	90.3×10^3	2.80	60	550	40	1.210	1.200	125	0.090	W1
M0358WC120	SM12CXC100	1200	358	2450	30×10^3	1.40	65	1000	100	1.460	0.800	125	0.090	W1
M0358WC180	SM18CXC100	1800	358	2450	30×10^3	1.40	65	1000	100	1.460	0.800	125	0.090	W1
M0367WC140	SM14CXC144	1400	367	4500	101×10^3	3.30	120	550	40	1.280	0.920	125	0.090	W1
M0367WC220	SM22CXC144	2200	367	4500	101×10^3	3.30	120	550	40	1.280	0.920	125	0.090	W1
M0367WC280	SM28CXC144	2800	367	4500	101×10^3	3.30	120	550	40	1.280	0.920	125	0.090	W1
M0371YH350	SM35HXC164	3500	371	4900	120×10^3	3.20	625	1000	200	1.050	1.650	150	0.100	W3
M0371YH450	SM45HXC164	4500	371	4900	120×10^3	3.20	625	1000	200	1.050	1.650	150	0.100	W3
M0433WC120	SM12CXC174	1200	433	4500	101×10^3	3.50	120	550	40	1.000	0.740	125	0.090	W1
M0433WC160	SM16CXC174	1600	433	4500	101×10^3	3.50	120	550	40	1.000	0.740	125	0.090	W1
M0433WC200	SM20CXC174	2000	433	4500	101×10^3	3.50	120	550	40	1.000	0.740	125	0.090	W1
M0437WC080	SM08CXC170	800	437	4500	101×10^3	3.00	75	550	40	1.020	0.700	125	0.090	W1
M0437WC140	SM14CXC170	1400	437	4500	101×10^3	3.00	75	550	40	1.020	0.700	125	0.090	W1
M0451YC120	SM12CXC176	1200	451	4500	101×10^3	2.80	120	550	40	1.000	0.740	125	0.085	W2
M0451YC160	SM16CXC176	1600	451	4500	101×10^3	2.80	120	550	40	1.000	0.740	125	0.085	W2
M0451YC200	SM20CXC176	2000	451	4500	101×10^3	2.80	120	550	40	1.000	0.740	125	0.085	W2
M0451YH120	N/A	1200	451	4500	101×10^3	2.80	120	550	40	1.000	0.740	125	0.085	W3
M0451YH160	N/A	1600	451	4500	101×10^3	2.80	120	550	40	1.000	0.740	125	0.085	W3
M0451YH200	N/A	2000	451	4500	101×10^3	2.80	120	550	40	1.000	0.740	125	0.085	W3
M0659LC400	SM40CXC364	4000	659	7620	290×10^3	4.20	270	1000	60	1.710	0.925	125	0.033	W4
M0659LC450	SM45CXC364	4500	659	7620	290×10^3	4.20	270	1000	60	1.710	0.925	125	0.033	W4
M0710LC560	SM56CXC274	5600	710	8400	353×10^3	4.00	1000	1000	200	1.450	0.875	125	0.033	W4
M0710LC600	SM60CXC274	6000	710	8400	353×10^3	4.00	1000	1000	200	1.450	0.875	125	0.033	W4
M0736LC400	SM40CXC374	4000	736	9000	405×10^3	5.20	450	1000	60	1.606	0.700	125	0.033	W4
M0736LC450	SM45CXC374	4500	736	9000	405×10^3	5.20	450	1000	60	1.606	0.700	125	0.033	W4
M0759YC040	SM04CXC190	400	759	9500	450×10^3	2.00	50	550	40	1.130	0.380	125	0.050	W2
M0759YC120	SM12CXC190	1200	759	9500	450×10^3	2.00	50	550	40	1.130	0.380	125	0.050	W2
M0759YC160	SM16CXC190	1600	759	9500	450×10^3	2.00	50	550	40	1.130	0.380	125	0.050	W2
M0759YH040	N/A	400	759	9500	450×10^3	2.00	50	550	40	1.130	0.380	125	0.050	W3
M0759YH120	N/A	1200	759	9500	450×10^3	2.00	50	550	40	1.130	0.380	125	0.050	W3
M0759YH160	N/A	1600	759	9500	450×10^3	2.00	50	550	40	1.130	0.380	125	0.050	W3
M0859LC140	SM14CXC220	1400	859	10000	500×10^3	3.00	110	800	50	1.170	0.320	125	0.044	W4
M0859LC160	SM16CXC220	1600	859	10000	500×10^3	3.00	110	800	50	1.170	0.320	125	0.044	W4
M0863LC260	SM26CXC474	2600	863	10000	500×10^3	4.80	370	1000	60	1.308	0.538	125	0.033	W4
M0863LC300	SM30CXC474	3000	863	10000	500×10^3	4.80	370	1000	60	1.308	0.538	125	0.033	W4
M0863LC360	SM36CXC474	3600	863	10000	500×10^3	4.80	370	1000	60	1.308	0.538	125	0.033	W4
M0872LC140	SM14CXC224	1400	872	10000	500×10^3	4.00	280	1000	60	1.090	0.340	125	0.044	W4
M0872LC180	SM18CXC224	1800	872	10000	500×10^3	4.00	280	1000	60	1.090	0.340	125	0.044	W4
M0872LC210	SM21CXC224	2100	872	10000	500×10^3	4.00	280	1000	60	1.090	0.340	125	0.044	W4
M0955LC200	SM20CXC524	2000	955	11700	684×10^3	3.00	240	1000	60	1.440	0.330	125	0.033	W4
M0955LC250	SM25CXC524	2500	955	11700	684×10^3	3.00	240	1000	60	1.440	0.330	125	0.033	W4
M1022LC120	SM12CXC724	1200	1022	14000	980×10^3	3.00	140	1000	60	1.240	0.330	125	0.033	W4
M1022LC160	SM16CXC724	1600	1022	14000	980×10^3	3.00	140	1000	60	1.240	0.330	125	0.033	W4
M1022LC200	SM20CXC724	2000	1022	14000	980×10^3	3.00	140	1000	60	1.240	0.330	125	0.033	W4
M1080LC100	SM10CXC314	1000	1080	13500	910×10^3	1.90	50	1000	60	1.125	0.314	125	0.033	W4
M1080LC120	SM12CXC314	1200	1080	13500	910×10^3	1.90	50	1000	60	1.125	0.314	125	0.033	W4
M1102NC500	SM50CXC574	5000	1102	13000	845×10^3	5.50	1500	1000	200	1.360	0.557	125	0.022	W5
M1102NC600	SM60CXC574	6000	1102	13000	845×10^3	5.50	1500	1000	200	1.360	0.557	125	0.022	W5
M1104NC400	SM40CXC624	4000	1104	13000	845×10^3	6.00	800	1000	200	1.370	0.553	125	0.022	W5
M1104NC450	SM45CXC624	4500	1104	13000	845×10^3	6.00	800	1000	200	1.370	0.553	125	0.022	W5

Outlines on pages 188 - 224

Soft Recovery Diodes - Capsule Types, continued

Type		V_{RRM}	I_{FAV} T_K= 55°C	I_{FSM} 10ms ½ sine $V_R \leq 60\%$ V_{RRM}	I^2t $V_R \leq 60\%$ V_{RRM}	Typ. Reverse Recovery Parameters $T_{j\,max}$ (50% Chord)				V_{T0} @$T_{j\,max}$	r_T @$T_{j\,max}$	$T_{j\,max}$	R_{thJK} d.c. 180° sine	Fig. No.
Part No.	Old Part No.	V	A	A	A^2s	t_{rr} µs	Q_r µC	@I_{FM} A	@-di_F/dt A/µs	V	mΩ	°C	K/W	
M1242NC260	SM26CXC824	2600	1242	16400	1.34×10^6	7.00	750	1000	60	1.270	0.420	125	0.022	W5
M1242NC360	SM36CXC824	3600	1242	16400	1.34×10^6	7.00	750	1000	60	1.270	0.420	125	0.022	W5
M1494NC160	SM16CXC924	1600	1494	19600	1.92×10^6	4.00	350	1000	60	1.150	0.265	125	0.022	W5
M1494NC250	SM25CXC924	2500	1494	19600	1.92×10^6	4.00	350	1000	60	1.150	0.265	125	0.022	W5
M1565VC400	SM40CXC394	4000	1565	19700	1.94×10^6	5.00	1550	1000	200	1.090	0.360	125	0.018	W6
M1565VC450	SM45CXC394	4500	1565	19700	1.94×10^6	5.00	1550	1000	200	1.090	0.360	125	0.018	W6
M1565VF400	SM40FXC394	4000	1565	19700	1.94×10^6	5.00	1550	1000	200	1.090	0.360	125	0.018	W43
M1565VF450	SM45FXC394	4500	1565	19700	1.94×10^6	5.00	1550	1000	200	1.090	0.360	125	0.018	W43
M1858NC120	SM12CXC514	1200	1858	25000	3.25×10^6	2.50	50	1000	60	1.130	0.127	125	0.022	W5
M1858NC160	SM16CXC514	1600	1858	25000	3.25×10^6	2.50	50	1000	60	1.130	0.127	125	0.022	W5
M2273VC300	N/A	3000	2273	28000	3.92×10^6	8.50	1300	1000	60	1.239	0.244	150	0.016	W6
M2273VC360	N/A	3600	2273	28000	3.92×10^6	8.50	1300	1000	60	1.239	0.244	150	0.016	W6
M2273VF300	N/A	3000	2273	28000	3.92×10^6	8.50	1300	1000	60	1.239	0.244	150	0.016	W43
M2273VF360	N/A	3600	2273	28000	3.92×10^6	8.50	1300	1000	60	1.239	0.244	150	0.016	W43
M2322ZC300	SM30CXC384	3000	2322	23000	2.64×10^6	6.50	1450	1000	150	1.670	0.186	125	0.011	W7
M2322ZC400	SM40CXC384	4000	2322	23000	2.64×10^6	6.50	1450	1000	150	1.670	0.186	125	0.011	W7
M2322ZD300	SM30DXC384	3000	2322	23000	2.64×10^6	6.50	1450	1000	150	1.670	0.186	125	0.011	W42
M2322ZD400	SM40DXC384	4000	2322	23000	2.64×10^6	6.50	1450	1000	150	1.670	0.186	125	0.011	W42
M2413VC200	N/A	2000	2413	32000	5.12×10^6	5.00	1275	1000	200	1.090	0.120	125	0.016	W6
M2413VC250	N/A	2000	2413	32000	5.12×10^6	5.00	1275	1000	200	1.090	0.120	125	0.016	W6
M2413VF200	N/A	2000	2413	32000	5.12×10^6	5.00	1275	1000	200	1.090	0.120	125	0.016	W43
M2413VF250	N/A	2000	2413	32000	5.12×10^6	5.00	1275	1000	200	1.090	0.120	125	0.016	W43

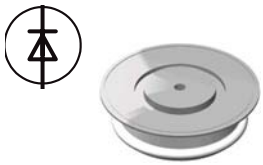

Fig. W1 - 70 g

Fig. W2 - 80 g

Fig. W3 - 140 g

Fig. W4 - 340 g

Fig. W5 - 510 g

Fig. W6 - 1000 g

Fig. W7 - 1700 g

Fig. W42 - 1200 g

Fig. W43 - 800 g

Outlines on pages 188 - 224

WESTCODE

Extra Fast Recovery Diodes - Capsule Types

These products are designed to offer the lowest practical values of recovered charge whilst offering wide safe operating area and high di/dt capability required by modern switching components.

Type		V_{RRM}	I_{FAV}	I_{FSM}	I^2t	Typ. Reverse Recovery Parameters					V_{T0}	r_T	$T_{j\,max}$	R_{thJK}	Fig. No.
			T_K=	10ms ½ sine	$V_R \leq 60\%$	$T_{j\,max}$ (50% Chord)					@$T_{j\,max}$			d.c.	
➤ New Part No.	Old Part No.	V	55°C A	$V_R \leq 60\%$ V_{RRM} A	V_{RRM} A^2s	I_{RM} A	t_{rr} µs	Q_r µC	@I_{FM} A	@-di_F/dt A/µs	V	mΩ	°C	180° sine K/W	
➤ F0240YC250	N/A	250	240	3100	48.1×10^3	40	2.0	40	550	40	2.271	2.853	150	0.100	W3
➤ F0240YH250	N/A	250	240	3100	48.1×10^3	40	2.0	40	550	40	2.271	2.853	150	0.100	W2
➤ F0240YC300	N/A	300	240	3100	48.1×10^3	40	2.0	40	550	40	2.271	2.853	150	0.100	W3
➤ F0240YH300	N/A	300	240	3100	48.1×10^3	40	2.0	40	550	40	2.271	2.853	150	0.100	W2
F0300WC140	F0258WC140	1400	240	2700	36.5×10^3	530	0.3	75	300	2000	1.760	2.210	125	0.095	W1
F0300WC180	F0258WC180	1800	240	2700	36.5×10^3	530	0.3	75	300	2000	1.760	2.210	125	0.095	W1
F0800LC140	F0400LC140	1400	775	7630	291×10^3	380	1.1	200	800	1000	1.494	0.692	125	0.032	W4
F0800LC180	F0400LC180	1800	775	7630	291×10^3	380	1.1	200	800	1000	1.494	0.692	125	0.032	W4
F0900VC450	FX055VC450	4500	816	10450	546×10^3	3000	1.4	2000	900	2000	2.024	1.274	115	0.016	W6
F0900VC520	FX055VC520	5200	816	10450	546×10^3	3000	1.4	2000	900	2000	2.024	1.274	115	0.016	W6
F0900VF450	FX055VF450	4500	816	10450	546×10^3	3000	1.4	2000	900	2000	2.024	1.274	115	0.016	W43
F0900VF520	FX055VF520	5200	816	10450	546×10^3	3000	1.4	2000	900	2000	2.024	1.274	115	0.016	W43
F1000LC080	F0500LC080	800	826	8500	361×10^3	320	1.6	250	1000	800	1.530	0.547	125	0.032	W4
F1000LC120	F0500LC120	1200	826	8500	361×10^3	320	1.6	250	1000	800	1.530	0.547	125	0.032	W4
F1400NC140	FX004NC140	1400	1093	17250	1.49×10^6	800	1.5	600	1400	1000	1.618	0.388	125	0.024	W5
F1400NC180	FX004NC180	1800	1093	17250	1.49×10^6	800	1.5	600	1400	1000	1.618	0.388	125	0.024	W5
F1500NC200	FX056NC200	2000	1054	13750	950×10^3	1065	1.5	800	1500	2000	1.372	0.535	125	0.024	W5
F1500NC250	FX056NC250	2500	1054	13750	950×10^3	1065	1.5	800	1500	2000	1.372	0.535	125	0.024	W5
F1600NC080	FX021NC080	800	1326	20000	2.0×10^6	480	2.3	550	1600	800	1.320	0.268	125	0.024	W5
F1600NC120	FX021NC120	1200	1326	20000	2.0×10^6	480	2.3	550	1600	800	1.320	0.268	125	0.024	W5

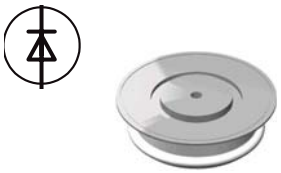

Fig. W1 - 70 g

Fig. W2 - 80 g

Fig. W3 - 140 g

Fig. W4 - 340 g

Fig. W5 - 510 g

Fig. W6 - 1000 g

Fig. W43 - 800 g

Outlines on pages 188 - 224

High Power Sonic-FRDs™ - Capsule Types

Introducing a new world-leading class of ultra fast and ultra soft recovery diode available from 1.7kV to 4.5kV in current ratings from 300 to 2500A. These diodes incorporate a unique manufacturing process and novel lifetime control to offer a class leading trade-off between conduction and switching loses. Their exceptionally wide safe operating area (SOA) makes them the number one choice for freewheeling diodes for snubberless IGBT and IGCT applications. In fact, most applications which require a fast, low loss diode can benefit from this new technology - for example, traction, medium voltage drives, induction heating and pulsed power applications.

Type		V_{RRM}	I_{FAV} T_K= 55°C	I_{FSM} 10ms ½ sine $V_R \leq 60\%$ V_{RRM}	I^2t $V_R \leq 60\%$ V_{RRM}	Typ. Reverse Recovery Parameters $T_{j\,max}$(50% Chord)					V_{T0} @$T_{j\,max}$	r_T @$T_{j\,max}$	$T_{j\,max}$	R_{thJK} 180° Sine	Fig. No.
Part No.	Old Part No.	V	A	A	A^2s	I_{rm} A	t_{rr} µs	Q_r µC	@I_{FM} A	@-di_F/dt A/µs	V	mΩ	°C	K/W	
E0300YH400	N/A	4000	277	2630	34.58×10^3	605	0.75	245	300	2000	2.170	3.800	150	0.073	W3
E0300YH450	N/A	4500	277	2630	34.58×10^3	605	0.75	245	300	2000	2.170	3.800	150	0.073	W3
E0400YH200	N/A	2000	348	3542	62.7×10^3	572	0.74	175	400	1500	1.770	2.290	150	0.073	W3
E0400YH250	N/A	2500	348	3542	62.7×10^3	572	0.74	175	400	1500	1.770	2.290	150	0.073	W3
E0900NC400	N/A	4000	969	15270	1.17×10^6	1340	2.20	1440	900	2000	2.140	1.150	150	0.020	W5
E0900NC450	N/A	4500	969	15270	1.17×10^6	1340	2.20	1440	900	2000	2.140	1.150	150	0.020	W5
E1500NC200	N/A	2000	1557	15180	1.15×10^6	1450	2.30	1550	1500	2000	1.670	0.360	150	0.020	W5
E1500NC250	N/A	2500	1557	15180	1.15×10^6	1450	2.30	1550	1500	2000	1.670	0.360	150	0.020	W5
E1500VF400	N/A	4000	1995	23600	2.78×10^6	1730	3.00	2700	1500	2000	2.350	0.270	150	0.013	W6
E1500VF450	N/A	4500	1995	23600	2.78×10^6	1730	3.00	2700	1500	2000	2.350	0.270	150	0.013	W6
E2000NC140	N/A	1400	1568	16500	1.13×10^6	1880	1.00	950	2000	4000	1.770	0.350	150	0.020	W5
E2000NC170	N/A	1700	1568	16500	1.13×10^6	1880	1.00	950	2000	4000	1.770	0.350	150	0.020	W5
E2500VF200	N/A	2000	2516	28600	4.10×10^6	1750	1.40	1350	2500	3000	1.630	0.210	150	0.013	W6
E2500VF250	N/A	2500	2516	28600	4.10×10^6	1750	1.40	1350	2500	3000	1.630	0.210	150	0.013	W6
EX175TC400	N/A	4000	Product Under Development										150	0.008	W28
EX175TC450	N/A	4500											150	0.008	W28

Under development

Fig. W3
Weight 140 g

Fig. W5
Weight 510 g

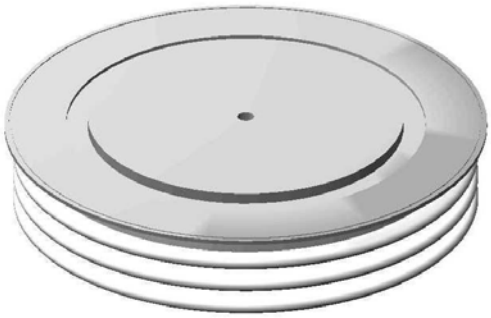

Fig. W6
Weight 1000 g

Fig. W7
Weight 1700 g

Phase Control Thyristors

WESTCODE

We provide one of the most comprehensive ranges of standard phase control thyristors available in the Industry.

Devices with voltage ranges from 600V up to 4.5kV are available, making them suitable for applications with line voltages from 230V to over 1kV (higher voltage applications are now served by our range of Medium Voltage Thyristors).

Westcode is a leading supplier of phase control products into demanding markets such as industrial DC drives, induction melting, marine / rail propulsion systems, wind power converters, electrochemical power supplies and soft starters.

These devices are optimised to give low conduction losses and are primarily intended for applications from line frequency up to 400Hz.

Phase Control Thyristors - Stud Types

Type ➤ New Part No.	Old Part No.	V_{DRM} / V_{RRM} V	I_{TAV} T_K= 55°C A	I_{TSM} 10ms ½ sine V_R = 60% V_{RRM} A	I^2t V_R = 60% V_{RRM} A^2s	V_{T0} @$T_{j\,max}$ V	r_T @$T_{j\,max}$ mΩ	$T_{j\,max}$ °C	R_{thJC} d.c. 180° sine K/W	R_{thJC} 120° Rect. K/W	Fig. No.
N0131SH120	N086PH12	1200	131	1700	14×10^3	1.570	2.290	125	0.23	0.28	W17
N0131SH160	N086PH16	1600	131	1700	14×10^3	1.570	2.290	125	0.23	0.28	W17
➤ N0131SJ120	N/A	1200	131	1700	14×10^3	1.570	2.290	125	0.23	0.28	W16
➤ N0131SJ160	N/A	1600	131	1700	14×10^3	1.570	2.290	125	0.23	0.28	W16
N0180SH120	N105PH12	1200	180	2450	30×10^3	0.900	1.790	125	0.23	0.28	W17
N0180SH160	N105PH16	1600	180	2450	30×10^3	0.900	1.790	125	0.23	0.28	W17
➤ N0180SJ120	N/A	1200	180	2450	30×10^3	0.900	1.790	125	0.23	0.28	W16
➤ N0180SJ160	N/A	1600	180	2450	30×10^3	0.900	1.790	125	0.23	0.28	W16
N0290SC120	N170PH12	1200	290	4200	88.2×10^3	1.080	1.300	125	0.12	0.14	W18
N0290SC160	N170PH16	1600	290	4200	88.2×10^3	1.080	1.300	125	0.12	0.14	W18
➤ N0290SG120	N/A	1200	290	4200	88.2×10^3	1.080	1.300	125	0.12	0.14	W25
➤ N0290SG160	N/A	1600	290	4200	88.2×10^3	1.080	1.300	125	0.12	0.14	W25
N0335SC120	N195PH12	1200	335	4650	108×10^3	0.920	0.990	125	0.12	0.14	W18
N0335SC160	N195PH16	1600	335	4650	108×10^3	0.920	0.990	125	0.12	0.14	W18
➤ N0335SG120	N/A	1200	335	4650	108×10^3	0.920	0.990	125	0.12	0.14	W25
➤ N0335SG160	N/A	1600	335	4650	108×10^3	0.920	0.990	125	0.12	0.14	W25
N0416SC020	N275PH02	200	416	6000	180×10^3	0.850	0.535	125	0.12	0.14	W18
N0416SC080	N275PH08	800	416	6000	180×10^3	0.850	0.535	125	0.12	0.14	W18
➤ N0416SG020	N/A	200	416	6000	180×10^3	0.850	0.535	125	0.12	0.14	W25
➤ N0416SG080	N/A	800	416	6000	180×10^3	0.850	0.535	125	0.12	0.14	W25

Fig. W16
Weight 100 g

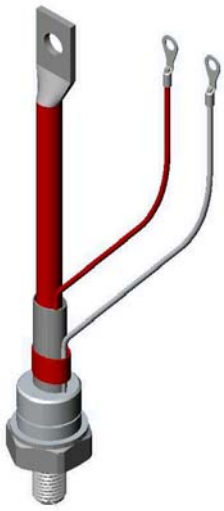

Fig. W17
Weight 130 g

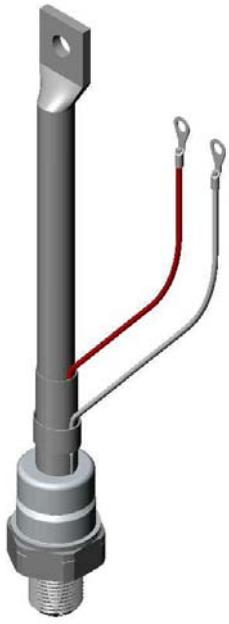

Fig. W18
Weight 250 g

Fig. W25
Weight 220g

Outlines on pages 188 - 224

WESTCODE

The Wespack outline is a new concept in phase control thyristors for applications requiring devices rated to 2200V. It gives the maximum power rating for weight and volume without compromising on quality and reliability. It also gives the maximum current rating and lowest thermal resistance for the package size.

WESPACK *Phase Control Thyristors - Capsule Types*

Type		V_{DRM} / V_{RRM}	I_{TAV}	I_{TSM} 10ms ½ sine	I^2t $V_R \leq 60\%$ V_{RRM}	V_{T0} @$T_{j\,max}$	r_T @$T_{j\,max}$	$T_{j\,max}$	R_{thJK} d.c.	R_{thJK} 120° Rect.	Fig. No.
			TK=55°C	$V_R \leq 60\%$ V_{RRM}					180° sine		
Part No.	Old Part No.	V	A	A	A^2s	V	mΩ	°C	K/W	K/W	
NX159JK200	n/a	2000	Product under development - Refer to Westcode factory								WP1
NX159JK220	n/a	2200									WP1
NX159JK160	n/a	1600	Product under development - Refer to Westcode factory								WP1
NX159JK180	n/a	1800									WP1
NX159JK120	n/a	1200	Product under development - Refer to Westcode factory								WP1
NX159JK140	n/a	1400									WP1
NX159JK020	n/a	200	Product under development - Refer to Westcode factory								WP1
NX159JK060	n/a	600									WP1
N1651QK200	n/a	2000	1651	17300	1.50×10^6	1.060	0.317	125	0.018	0.0217	WP2
N1651QK220	n/a	2200	1651	17300	1.50×10^6	1.060	0.317	125	0.018	0.0217	WP2
N1806QK160	n/a	1600	1806	19100	1.82×10^6	1.022	0.253	125	0.018	0.0217	WP2
N1806QK180	n/a	1800	1806	19100	1.82×10^6	1.022	0.253	125	0.018	0.0217	WP2
N2083QK080	n/a	800	2083	22000	2.42×10^6	0.955	0.177	125	0.018	0.0217	WP2
N2083QK140	n/a	1400	2083	22000	2.42×10^6	0.955	0.177	125	0.018	0.0217	WP2
NX155QK020	n/a	200	Product under development - Refer to Westcode factory						0.018	0.0217	WP2
NX155QK060	n/a	600							0.018	0.0217	WP2
N2367MK200	n/a	2000	2367	32400	5.25×10^6	0.883	0.210	125	0.014	0.0157	WP3
N2367MK220	n/a	2200	2367	32400	5.25×10^6	0.883	0.210	125	0.014	0.0157	WP3
N2593MK160	n/a	1600	2593	34500	5.95×10^6	0.940	0.154	125	0.014	0.0157	WP3
N2593MK180	n/a	1800	2593	34500	5.95×10^6	0.940	0.154	125	0.014	0.0157	WP3
NX149MK120	n/a	1200	Product under development - Refer to Westcode factory						0.014	0.0157	WP3
NX149MK140	n/a	1400							0.014	0.0157	WP3
N4004MK020	n/a	200	4004	45400	10.3×10^6	0.990	0.053	125	0.014	0.0157	WP3
N4004MK060	n/a	600	4004	45400	10.3×10^6	0.990	0.053	125	0.014	0.0157	WP3
NX160HK200	n/a	2000	Product under development - Refer to Westcode factory						0.009	0.0099	WP4
NX160HK220	n/a	2200							0.009	0.0099	WP4
N4472HK160	n/a	1600	4472	59000	17.40×10^6	0.986	0.068	125	0.009	0.0099	WP4
N4472HK180	n/a	1800	4472	59000	17.40×10^6	0.986	0.068	125	0.009	0.0099	WP4
NX160HK120	n/a	1200	Product under development - Refer to Westcode factory						0.009	0.0099	WP4
NX160HK140	n/a	1400							0.009	0.0099	WP4
NX157HK020	n/a	200	Product under development - Refer to Westcode factory						0.009	0.0099	WP4
NX157HK060	n/a	600							0.009	0.0099	WP4

Fig. WP1
Weight 180 g

Fig. WP2
Weight 200 g

Fig. WP3
Weight 260 g

Fig. WP4
Weight 550 g

Under development

Outlines on pages 188 - 224

Phase Control Thyristors - Capsule Types

Type		V_{DRM} / V_{RRM}	I_{TAV} T_K=55°C	I_{TSM} 10ms ½ sine $V_R \leq 60\%$ V_{RRM}	I^2t $V_R \leq 60\%$ V_{RRM}	V_{T0} @$T_{j\,max}$	r_T @$T_{j\,max}$	$T_{j\,max}$	R_{thJK} 180° Sine	R_{thJK} 120° Rect.	Fig. No.
Part No.	Old Part No.	V	A	A	A^2s	V	mΩ	°C	K/W	K/W	
N0194WC120	N086CH12	1200	194	1700	14.5×10^3	1.570	2.290	125	0.135	0.190	W8
N0194WC160	N086CH16	1600	194	1700	14.5×10^3	1.570	2.290	125	0.135	0.190	W8
N0255WC120	N105CH12	1200	255	2450	30.0×10^3	0.900	1.790	125	0.135	0.190	W8
N0255WC160	N105CH16	1600	255	2450	30.0×10^3	0.900	1.790	125	0.135	0.190	W8
N0339WC120	N170CH12	1200	339	4200	88.2×10^3	1.080	1.300	125	0.095	0.110	W8
N0339WC160	N170CH16	1600	339	4200	88.2×10^3	1.080	1.300	125	0.095	0.110	W8
N0392WC120	N195CH12	1200	392	4650	108×10^3	0.920	0.990	125	0.095	0.110	W8
N0392WC160	N195CH16	1600	392	4650	108×10^3	0.920	0.990	125	0.095	0.110	W8
N0491WC020	N275CH02	200	491	6000	180×10^3	0.850	0.535	125	0.095	0.110	W8
N0491WC080	N275CH08	800	491	6000	180×10^3	0.850	0.535	125	0.095	0.110	W8
N0606YS200	N282SH20	2000	606	7100	252×10^3	1.103	0.804	125	0.050	0.058	W9
N0606YS250	N/A	2500	606	7100	252×10^3	1.103	0.804	125	0.050	0.058	W9
N0616LC400	N255CH40	4000	616	5250	138×10^3	1.220	1.530	125	0.032	0.040	W10
N0616LC450	N255CH45	4500	616	5250	138×10^3	1.220	1.530	125	0.032	0.040	W10
N0634LC380	N257CH38	3800	634	7000	245×10^3	1.100	1.500	125	0.032	0.040	W10
N0634LC420	N257CH42	4200	634	7000	245×10^3	1.100	1.500	125	0.032	0.040	W10
N0646LC300	N260CH30	3000	646	5700	162×10^3	1.210	1.360	125	0.032	0.040	W10
N0646LC360	N260CH36	3600	646	5700	162×10^3	1.210	1.360	125	0.032	0.040	W10
N0676YS120	N281SH12	1200	676	7500	281×10^3	1.090	0.587	125	0.050	0.058	W9
N0676YS180	N281SH18	1800	676	7500	281×10^3	1.090	0.587	125	0.050	0.058	W9
N0734YS120	N280SH12	1200	734	8400	353×10^3	1.030	0.483	125	0.050	0.058	W9
N0734YS160	N280SH16	1600	734	8400	353×10^3	1.030	0.483	125	0.050	0.058	W9
N0782YS120	N283SH12	1200	782	9420	444×10^3	0.920	0.450	125	0.050	0.058	W9
N0782YS140	N283SH14	1600	782	9420	444×10^3	0.920	0.450	125	0.050	0.058	W9
N0882NC400	N320CH40	4000	882	7700	296×10^3	1.300	0.920	125	0.024	0.030	W11
N0882NC450	N320CH45	5000	882	7700	296×10^3	1.300	0.920	125	0.024	0.030	W11
N0910LS200	N330SH20	2000	910	9200	423×10^3	1.040	0.606	125	0.032	0.040	W10a
N0910LS260	N330SH26	2600	910	9200	423×10^3	1.040	0.606	125	0.032	0.040	W10a
N0992YS020	N310SH02	200	992	11000	605×10^3	0.820	0.240	125	0.050	0.058	W9
N0992YS060	N310SH06	600	992	11000	605×10^3	0.820	0.240	125	0.050	0.058	W9
N1010NC300	N360CH30	3000	1010	12100	732×10^3	1.170	0.687	125	0.024	0.030	W11
N1010NC380	N360CH38	3800	1010	12100	732×10^3	1.170	0.687	125	0.024	0.030	W11
N1042LS120	N350SH12	1200	1042	11500	661×10^3	1.080	0.395	125	0.032	0.040	W10a
N1042LS180	N350SH18	1800	1042	11500	661×10^3	1.080	0.395	125	0.032	0.040	W10a
N1114LS120	N370SH12	1200	1114	12700	806×10^3	1.000	0.349	125	0.032	0.040	W10a
N1114LS180	N370SH18	1800	1114	12700	806×10^3	1.000	0.349	125	0.032	0.040	W10a
N1132NC300	N390CH30	3000	1132	14300	1.02×10^6	1.150	0.510	125	0.024	0.030	W11
N1132NC320	N390CH32	3200	1132	14300	1.02×10^6	1.150	0.510	125	0.024	0.030	W11
N1159NC380	N500CH38	3800	1159	14500	1.05×10^6	1.100	0.574	125	0.022	0.027	W11
N1159NC420	N500CH42	4200	1159	14500	1.05×10^6	1.100	0.574	125	0.022	0.027	W11
N1265LS120	N520SH12	1200	1265	15000	1.13×10^6	0.900	0.265	125	0.032	0.040	W10a
N1265LS150	N520SH15	1500	1265	15000	1.13×10^6	0.900	0.265	125	0.032	0.040	W10a
N1297NS200	N450SH20	2000	1297	17600	1.55×10^6	1.030	0.380	125	0.024	0.030	W11a
N1297NS260	N450SH26	2600	1297	17600	1.55×10^6	1.030	0.380	125	0.024	0.030	W11a
N1314NC300	N570CH30	3000	1314	16600	1.38×10^6	1.000	0.437	125	0.024	0.030	W11
N1314NC360	N570CH36	3600	1314	16600	1.38×10^6	1.000	0.437	125	0.024	0.030	W11
N1351VC400	N560CH40	4000	1351	17500	1.53×10^6	1.200	0.553	125	0.017	0.020	W12
N1351VC450	N560CH45	4500	1351	17500	1.53×10^6	1.200	0.553	125	0.017	0.020	W12
N1351VD400	N/A	4000	1351	17500	1.53×10^6	1.200	0.553	125	0.017	0.020	W50
N1351VD450	N/A	4500	1351	17500	1.53×10^6	1.200	0.553	125	0.017	0.020	W50
N1467NS200	N490SH20	2000	1467	21500	2.31×10^6	1.000	0.272	125	0.024	0.030	W11a
N1467NS260	N490SH26	2600	1467	21500	2.31×10^6	1.000	0.272	125	0.024	0.030	W11a
N1479NS240	N620SH24	2400	1436	21000	2.21×10^6	1.000	0.342	125	0.022	0.026	W11a
N1479NS300	N620SH30	3000	1436	21000	2.21×10^6	1.000	0.342	125	0.022	0.026	W11a
N1547NS160	N510SH16	1600	1547	23300	2.71×10^6	0.920	0.252	125	0.024	0.030	W11a
N1547NS200	N510SH20	2000	1547	23300	2.71×10^6	0.920	0.252	125	0.024	0.030	W11a
N1588NS200	N680SH20	2000	1588	22500	2.53×10^6	0.951	0.268	125	0.022	0.027	W11a
N1588NS260	N680SH26	2600	1588	22500	2.53×10^6	0.951	0.268	125	0.022	0.027	W11a

Outlines on pages 188 - 224

Phase Control Thyristors - Capsule Types, continued

Type		V_{DRM} / V_{RRM}	I_{TAV} T_K=55°C	I_{TSM} 10ms ½ sine $V_R \leq 60\%$ V_{RRM}	I^2t $V_R \leq 60\%$ V_{RRM}	V_{T0} @$T_{j\,max}$	r_T @$T_{j\,max}$	$T_{j\,max}$	R_{thJK} 180° Sine	R_{thJK} 120° Rect.	Fig. No.
Part No.	Old Part No.	V	A	A	A^2s	V	mΩ	°C	K/W	K/W	
N1661VC300	N630CH30	3000	1661	23000	2.65×10^6	1.040	0.350	125	0.017	0.020	W12
N1661VC360	N630CH36	3600	1661	23000	2.65×10^6	1.040	0.350	125	0.017	0.020	W12
N1661VD300	N/A	3000	1661	23000	2.65×10^6	1.040	0.350	125	0.017	0.020	W50
N1661VD360	N/A	3600	1661	23000	2.65×10^6	1.040	0.350	125	0.017	0.020	W50
N1712VC240	N640CH24	2400	1712	24500	3.00×10^6	1.050	0.320	125	0.017	0.020	W12
N1712VC300	N640CH30	3000	1712	24500	3.00×10^6	1.050	0.320	125	0.017	0.020	W12
N1712VD240	N/A	2400	1712	24500	3.00×10^6	1.050	0.320	125	0.017	0.020	W50
N1712VD300	N/A	3000	1712	24500	3.00×10^6	1.050	0.320	125	0.017	0.020	W50
N1718NS120	N540SH12	1200	1718	27200	3.70×10^6	0.979	0.169	125	0.024	0.030	W11a
N1718NS180	N540SH18	1800	1718	27200	3.70×10^6	0.979	0.169	125	0.024	0.030	W11a
N1802NS120	N600SH12	1200	1802	29600	4.38×10^6	0.855	0.171	125	0.024	0.030	W11a
N1802NS160	N600SH16	1600	1802	29600	4.38×10^6	0.855	0.171	125	0.024	0.030	W11a
N2046NS120	N740SH12	1200	2046	29200	4.26×10^6	0.980	0.114	125	0.022	0.026	W11a
N2046NS160	N740SH16	1600	2046	29200	4.26×10^6	0.980	0.114	125	0.022	0.026	W11a
N2086NS060	N610SH06	600	2086	35000	6.13×10^6	0.840	0.108	125	0.024	0.030	W11a
N2086NS100	N610SH10	1000	2086	35000	6.13×10^6	0.840	0.108	125	0.024	0.030	W11a
N2172ZC400	N750CH40	4000	2172	28000	3.92×10^6	1.350	0.294	125	0.011	0.012	W13
N2172ZC450	N750CH45	4500	2172	28000	3.92×10^6	1.350	0.294	125	0.011	0.012	W13
N2172ZD400	N750DH40	4000	2172	28000	3.92×10^6	1.350	0.294	125	0.011	0.012	W46
N2172ZD450	N750DH45	4500	2172	28000	3.92×10^6	1.350	0.294	125	0.011	0.012	W46
N2293VC180	N760CH18	1800	2293	33800	5.71×10^6	0.956	0.148	125	0.017	0.020	W12
N2293VC220	N760CH22	2200	2293	33800	5.71×10^6	0.956	0.148	125	0.017	0.020	W12
N2293VD180	N/A	1800	2293	33800	5.71×10^6	0.956	0.148	125	0.017	0.020	W50
N2293VD220	N/A	2200	2293	33800	5.71×10^6	0.956	0.148	125	0.017	0.020	W50
N2418ZC300	N850CH30	3000	2418	30000	4.50×10^6	1.160	0.246	125	0.011	0.012	W13
N2418ZC360	N850CH36	3600	2418	30000	4.50×10^6	1.160	0.246	125	0.011	0.012	W13
N2418ZD300	N/A	3000	2418	30000	4.50×10^6	1.160	0.246	125	0.011	0.012	W46
N2418ZD360	N/A	3600	2418	30000	4.50×10^6	1.160	0.246	125	0.011	0.012	W46
N2500VC120	N990CH12	1200	2500	37000	6.85×10^6	0.880	0.124	125	0.017	0.020	W12
N2500VC160	N990CH16	1600	2500	37000	6.85×10^6	0.880	0.124	125	0.017	0.020	W12
N2500VD120	N/A	1200	2500	37000	6.85×10^6	0.880	0.124	125	0.017	0.020	W50
N2500VD160	N/A	1600	2500	37000	6.85×10^6	0.880	0.124	125	0.017	0.020	W50
N2543ZC240	N880CH24	2400	2543	32000	5.12×10^6	0.780	0.274	125	0.011	0.012	W13
N2543ZC300	N880CH30	3000	2543	32000	5.12×10^6	0.780	0.274	125	0.011	0.012	W13
N2543ZD240	N/A	2400	2543	32000	5.12×10^6	0.780	0.274	125	0.011	0.012	W46
N2543ZD300	N/A	3000	2543	32000	5.12×10^6	0.780	0.274	125	0.011	0.012	W46
N3012ZC200	N900CH20	2000	3012	45100	10.2×10^6	0.920	0.160	125	0.011	0.012	W13
N3012ZC260	N900CH26	2600	3012	45100	10.2×10^6	0.920	0.160	125	0.011	0.012	W13
N3012ZD200	N/A	2000	3012	45100	10.2×10^6	0.920	0.160	125	0.011	0.012	W46
N3012ZD260	N/A	2600	3012	45100	10.2×10^6	0.920	0.160	125	0.011	0.012	W46
N3476TC360	N1463CH36	3600	3476	46800	10.95×10^6	0.970	0.180	125	0.008	0.009	W14
N3476TC420	N1463CH42	4200	3476	46800	10.95×10^6	0.970	0.180	125	0.008	0.009	W14
N3476TD360	N1463DH36	3600	3476	46800	10.95×10^6	0.970	0.180	125	0.008	0.009	W19
N3476TD420	N1463DH42	4200	3476	46800	10.95×10^6	0.970	0.180	125	0.008	0.009	W19
N3533ZC140	N1400CH14	1400	3533	50000	12.50×10^6	0.970	0.095	125	0.011	0.012	W13
N3533ZC220	N1400CH22	2200	3533	50000	12.50×10^6	0.970	0.095	125	0.011	0.012	W13
N3533ZD140	N/A	1400	3533	50000	12.50×10^6	0.970	0.095	125	0.011	0.012	W46
N3533ZD220	N/A	2200	3533	50000	12.50×10^6	0.970	0.095	125	0.011	0.012	W46
N3839TC300	N1663CH30	3000	3839	49500	12.25×10^6	0.950	0.140	125	0.008	0.012	W14
N3839TC350	N1663CH35	3500	3839	49500	12.25×10^6	0.950	0.140	125	0.008	0.012	W14
N3839TD300	N1663DH30	3000	3839	49500	12.25×10^6	0.950	0.140	125	0.008	0.012	W19
N3839TD350	N1663DH35	3500	3839	49500	12.25×10^6	0.950	0.140	125	0.008	0.012	W19
N4085ZC080	N1600CH08	800	4085	64000	20.5×10^6	0.850	0.070	125	0.011	0.012	W13
N4085ZC120	N1600CH12	1200	4085	64000	20.5×10^6	0.850	0.070	125	0.011	0.012	W13
N4085ZD080	N/A	800	4085	64000	20.5×10^6	0.850	0.070	125	0.011	0.012	W46
N4085ZD120	N/A	1200	4085	64000	20.5×10^6	0.850	0.070	125	0.011	0.012	W46

Outlines on pages 188 - 224

Phase Control Thyristors - Capsule Types, continued

Type		V_{DRM} / V_{RRM}	I_{TAV} T_K=55°C	I_{TSM} 10ms ½ sine $V_R \leq 60\%$ V_{RRM}	I^2t $V_R \leq 60\%$ V_{RRM}	V_{T0} @$T_{j\,max}$	r_T @$T_{j\,max}$	$T_{j\,max}$	R_{thJK} 180° Sine	R_{thJK} 120° Rect.	Fig. No.
Part No.	Old Part No.	V	A	A	A^2s	V	mΩ	°C	K/W	K/W	
N4151FC360	N1483CH36	3600	4151	54000	14.6×10^6	0.850	0.170	125	0.0065	0.0068	W15
N4151FC420	N1483CH42	4200	4151	54000	14.6×10^6	0.850	0.170	125	0.0065	0.0068	W15
N4151FD360	N1483DH36	3600	4151	54000	14.6×10^6	0.850	0.170	125	TBC	TBC	W48
N4151FD420	N1483DH42	4200	4151	54000	14.6×10^6	0.850	0.170	125	TBC	TBC	W48
N4400TC120	N1863CH12	1200	4400	54000	14.6×10^6	0.900	0.100	125	0.008	0.0085	W14
N4400TC220	N1863CH22	2200	4400	54000	14.6×10^6	0.900	0.100	125	0.008	0.0085	W14
N4400TC280	N1863CH28	2800	4400	54000	14.6×10^6	0.900	0.100	125	0.008	0.0085	W14
N4400TD120	N1863DH12	1200	4400	54000	14.6×10^6	0.900	0.100	125	0.008	0.0085	W19
N4400TD220	N1863DH22	2200	4400	54000	14.6×10^6	0.900	0.100	125	0.008	0.0085	W19
N4400TD280	N1863DH28	2800	4400	54000	14.6×10^6	0.900	0.100	125	0.008	0.0085	W19
N4803FC300	N1683CH30	3000	4803	60000	18.0×10^6	0.920	0.110	125	0.0065	0.0068	W15
N4803FC350	N1683CH35	3500	4803	60000	18.0×10^6	0.920	0.110	125	0.0065	0.0068	W15
N4803FD300	N/A	3000	4803	60000	18.0×10^6	0.920	0.110	125	TBC	TBC	W48
N4803FD350	N/A	3500	4803	60000	18.0×10^6	0.920	0.110	125	TBC	TBC	W48
N5177FC200	N1883CH20	2000	5177	67500	22.8×10^6	0.800	0.100	125	0.0065	0.0068	W15
N5177FC280	N1883CH28	2800	5177	67500	22.8×10^6	0.800	0.100	125	0.0065	0.0068	W15
N5177FD200	N/A	2000	5177	67500	22.8×10^6	0.800	0.100	125	TBC	TBC	W48
N5177FD280	N/A	2800	5177	67500	22.8×10^6	0.800	0.100	125	TBC	TBC	W48
N5946FC180	N1983CH18	1800	5946	72000	25.9×10^6	0.855	0.065	125	0.0065	0.0068	W15
N5946FC220	N1983CH22	2200	5946	72000	25.9×10^6	0.855	0.065	125	0.0065	0.0068	W15
N5946FD180	N/A	1800	5946	72000	25.9×10^6	0.855	0.065	125	TBC	TBC	W48
N5946FD220	N/A	2200	5946	72000	25.9×10^6	0.855	0.065	125	TBC	TBC	W48

Fig. W8
Weight 70 g

Fig. W9
Weight 90 g

Fig. W10
Weight 340 g

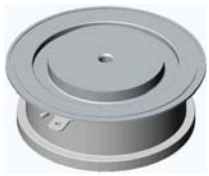

Fig. W10a
Weight 340 g

Fig. W11
Weight 510 g

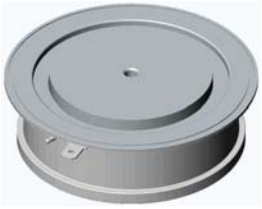

Fig. W11a
Weight 510 g

Fig. W12
Weight 1000 g

Fig. W13
Weight 1700 g

Fig. W14
Weight 1300 g

Fig. W15
Weight 2800 g

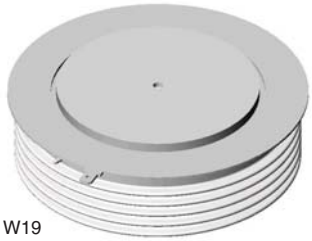

Fig. W19
Weight 1700 g

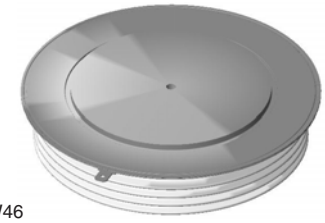

Fig. W46
Weight 1200 g

Fig. W48
Weight 1200 g

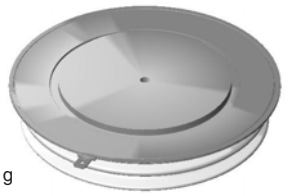

Fig. W50
Weight 750 g

Outlines on pages 188 - 224

WESTCODE

Medium voltage applications place additional demands on phase controlled thyristors. To meet these demands we have developed a comprehensive range of thyristors optimised for medium voltage applications. As voltages increase, so do switching losses and turn-off time – to a point where they become significant in line frequency applications.

Our patented distributed gate architecture ensures excellent switching performance over a wide range of voltage, current and di/dt. Device lifetime is also engineered to achieve an optimum balance between conduction losses, commutation losses and turn off time to give maximum power handling from line frequency to 400 Hz. This also gives significant benefits when series or parallel connection of devices is required.

Medium voltage thyristors are available from 3.2 kV up to 6.5 kV with silicon diameters from 38 mm to 100 mm making them particularly suitable for high power converters such as medium voltage DC drives, medium voltage soft starts and utility applications such as HVDC, static VAr compensators, excitation and transfer switches.

We recognise the importance of reliability in these large, capital intensive applications and as a result we subject these parts to extended levels of both routine and type testing to ensure that your investment gives years of trouble free service.

Medium Voltage Thyristors - Capsule Types

Under development

Type		V_{DRM} / V_{RRM}	I_{TAV} T_K= 55°C	I_{TSM} 10ms ½ sine $V_R \leq 60\%$ V_{RRM}	I^2t $V_R \leq 60\%$ V_{RRM}	t_q @ 200V/µs	Typ. Reverse Recovery Charge $T_{j\,max}$, 50% Chord			V_{T0}	r_T	$T_{j\,max}$	R_{thJK}		Fig. No.
➤ New Part No.	Old Part No.	V	A	A	A^2s	µs	Q_{ra} µC	@I_{TM} A	@-di/dt A/µs	@$T_{j\,max}$ V	mΩ	°C	180° Sine K/W	120° Rect. K/W	
K0349LC600	P201CH60	6000	349	4800	115×10^3	900-1200	900	1000	60	1.568	2.428	115	0.047	0.049	W10
K0349LC650	P201CH65	6500	349	4800	115×10^3	900-1200	900	1000	60	1.568	2.428	115	0.047	0.049	W10
K0769NC600	P410CH60	6000	769	8600	370×10^3	900-1200	2050	1000	10	1.566	1.172	115	0.024	0.029	W11
K0769NC650	P410CH65	6500	769	8600	370×10^3	900-1200	2050	1000	10	1.566	1.172	115	0.024	0.029	W11
K0890NC360	R295CH36	3600	890	10900	594×10^3	350-550	1500	1000	10	1.516	0.800	125	0.024	0.029	W11
K0890NC420	R295CH42	4200	890	10900	594×10^3	350-550	1500	1000	10	1.516	0.800	125	0.024	0.029	W11
K1121NC320	P440CH32	3200	1121	15000	1.13×10^6	400-500	1000	1000	10	1.098	0.542	125	0.024	0.029	W11
K1121NC360	P440CH36	3600	1121	15000	1.13×10^6	400-500	1000	1000	10	1.098	0.542	125	0.024	0.029	W11
K1197NC300	P480CH30	3000	1197	10646	567×10^3	200-300	1400	1000	10	1.210	0.430	125	0.024	0.029	W11
K1197NC320	P480CH32	3200	1197	10646	567×10^3	200-300	1400	1000	10	1.210	0.430	125	0.024	0.029	W11
➤ K1351VC600	N/A	6000	1351	14300	1.02×10^6	800-1500	4500	2000	10	1.410	0.600	115	0.013	0.014	W12
➤ K1351VC650	N/A	6500	1351	14300	1.02×10^6	800-1500	4500	2000	10	1.410	0.600	115	0.013	0.014	W12
➤ K1351VF600	N/A	6000	1351	14300	1.02×10^6	800-1500	4500	2000	10	1.410	0.600	115	0.013	0.014	W50
➤ K1351VF650	N/A	6500	1351	14300	1.02×10^6	800-1500	4500	2000	10	1.410	0.600	115	0.013	0.014	W50
K1947ZC400	P855CH40	4000	1947	25000	3.13×10^6	600-700	3500	1000	10	1.221	0.425	125	0.011	0.012	W13
K1947ZC450	P855CH45	4500	1947	25000	3.13×10^6	600-700	3500	1000	10	1.221	0.425	125	0.011	0.012	W13
K1947ZD400	P855CH40	4000	1947	25000	3.13×10^6	600-700	3500	1000	10	1.221	0.425	125	0.011	0.012	W46
K1947ZD450	P855CH45	4500	1947	25000	3.13×10^6	600-700	3500	1000	10	1.221	0.425	125	0.011	0.012	W46
K2095ZC360	P880CH36	3600	2095	18200	1.66×10^6	400-500	2400	2000	10	1.502	0.296	125	0.011	0.012	W13
K2095ZC420	P880CH42	4200	2095	18200	1.66×10^6	400-500	2400	2000	10	1.502	0.296	125	0.011	0.012	W13
K2095ZD360	P880DH36	3600	2095	18200	1.66×10^6	400-500	2400	2000	10	1.502	0.296	125	0.011	0.012	W46
K2095ZD420	P880DH42	4200	2095	18200	1.66×10^6	400-500	2400	2000	10	1.502	0.296	125	0.011	0.012	W46
K2359TC600	P1063CH60	6000	2359	27000	3.65×10^6	1100-1500	6800	2000	10	1.391	0.360	115	0.0085	0.009	W14
K2359TC650	P1063CH65	6500	2359	27000	3.65×10^6	1100-1500	6800	2000	10	1.391	0.360	115	0.0085	0.009	W14
K2359TD600	N/A	6000	2359	27000	3.65×10^6	1100-1500	6800	2000	10	1.391	0.360	115	0.0085	0.009	W19
K2359TD650	N/A	6500	2359	27000	3.65×10^6	1100-1500	6800	2000	10	1.391	0.360	115	0.0085	0.009	W19
K2623TC450	R1263CH45	4500	2623	27000	3.65×10^6	500-1000	2600	2000	60	1.421	0.295	125	0.008	0.009	W14
K2623TC520	R1263CH52	5200	2623	27000	3.65×10^6	500-1000	2600	2000	60	1.421	0.295	125	0.008	0.009	W14
K2623TD450	N/A	4500	2623	27000	3.65×10^6	500-1000	2600	2000	60	1.421	0.295	125	0.008	0.009	W19
K2623TD520	N/A	5200	2623	27000	3.65×10^6	500-1000	2600	2000	60	1.421	0.295	125	0.008	0.009	W19
K2960TC450	N/A	4500	2960	32500	5.28×10^6	800-1600	11000	4000	10	1.229	0.212	125	0.0085	0.009	W14
K2960TC520	N/A	5200	2960	32500	5.28×10^6	800-1600	11000	4000	10	1.229	0.212	125	0.0085	0.009	W14
K2960TD450	N/A	4500	2960	32500	5.28×10^6	800-1600	11000	4000	10	1.229	0.212	125	0.0085	0.009	W19
K2960TD520	N/A	5200	2960	32500	5.28×10^6	800-1600	11000	4000	10	1.229	0.212	125	0.0085	0.009	W19
K2973FC600	N/A	6000	2973	35400	6.27×10^6	1100-1500	6200	4000	10	1.581	0.207	115	0.0065	0.007	W15
K2973FC650	N/A	6500	2973	35400	6.27×10^6	1100-1500	6200	4000	10	1.581	0.207	115	0.0065	0.007	W15
K2973FD600	N/A	6000	2973	35400	6.27×10^6	1100-1500	6200	4000	10	1.581	0.207	115	TBC	TBC	W48
K2973FD650	N/A	6500	2973	35400	6.27×10^6	1100-1500	6200	4000	10	1.581	0.207	115	TBC	TBC	W48
K3362TC360	N/A	3600	3362	39500	7.80×10^6	1000-2000	7400	4000	10	1.052	0.168	125	0.0085	0.009	W14
K3362TC420	N/A	4200	3362	39500	7.80×10^6	1000-2000	7400	4000	10	1.052	0.168	125	0.0085	0.009	W14
K3362TD360	N/A	3600	3362	39500	7.80×10^6	1000-2000	7400	4000	10	1.052	0.168	125	0.0085	0.009	W19
K3362TD420	N/A	4200	3362	39500	7.80×10^6	1000-2000	7400	4000	10	1.052	0.168	125	0.0085	0.009	W19
K3503FC450	N/A	4500	3503	43200	9.33×10^6	900-1800	5500	4000	10	1.375	0.196	125	0.0065	0.007	W15
K3503FC520	N/A	5200	3503	43200	9.33×10^6	900-1800	5500	4000	10	1.375	0.196	125	0.0065	0.007	W15
K3503FD450	N/A	4500	3503	43200	9.33×10^6	900-1800	5500	4000	10	1.375	0.196	125	TBC	TBC	W48
K3503FD520	N/A	5200	3503	43200	9.33×10^6	900-1800	5500	4000	10	1.375	0.196	125	TBC	TBC	W48
KX101FC360	N/A	3600	Product under development									125	0.0065	0.007	W15
KX101FC420	N/A	4200										125	0.0065	0.007	W15
KX101FD360	N/A	3600										125	TBC	TBC	W48
KX101FD420	N/A	4200										125	TBC	TBC	W48

Outlines on pages 188 - 224

Fig. W10
Weight 340 g

Fig. W11
Weight 510 g

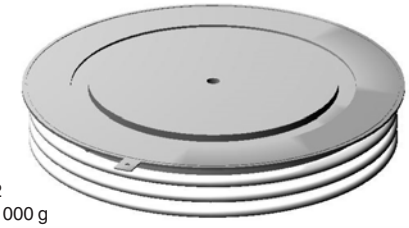

Fig. W12
Weight 1000 g

Fig. W13
Weight 1700 g

Fig. W14
Weight 1300 g

Fig. W15
Weight 2800 g

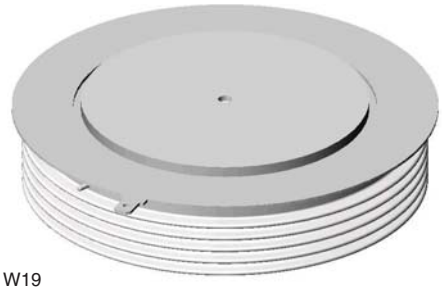

Fig. W19
Weight 1700 g

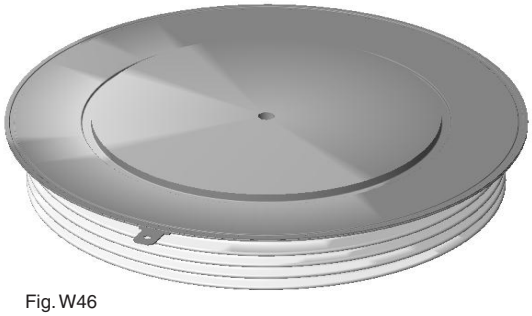

Fig. W46
Weight 1200 g

Fig. W50
Weight 750 g

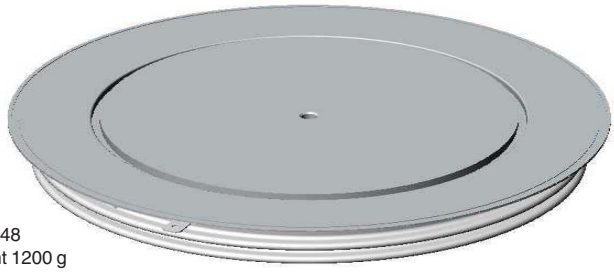

Fig. W48
Weight 1200 g

WESTCODE

We are widely acknowledged as the global leader in fast switching thyristor technologies.

Devices with blocking voltages up to 4.5kV and current ratings up to 4kA are available with turn off times as low as 10µs. Our patented distributed gate architecture together with highly efficient axial lifetime control produce a unique combination of high di/dt capability, fast / soft recovery and low conduction losses.

Fast Turn-Off and Distributed Gate Thyristor devices allow the development of highly efficient, compact and reliable high frequency resonant converters for demanding applications such as induction heating, traction and UPS.

Additionally these devices make an excellent choice for fast high-energy switches such as pulsed power and crowbars. As with all of our high power semiconductors, these parts utilise advanced compression bonded construction ensuring long term reliability in applications subject to repeated power cycles.

Fast Turn-Off Thyristors - Stud Types

Type		V_{DRM} / V_{RRM}	I_{TAV} T_K= 55°C	I_{TSM} 10ms ½ sine $V_R \leq 60\%$ V_{RRM}	I^2t $V_R \leq 60\%$ V_{RRM}	t_q @ 200V/µs	Typ. Reverse Recovery Charge $T_{j\,max}$, 50% Chord			V_{T0} @$T_{j\,max}$	r_T @$T_{j\,max}$	$T_{j\,max}$	R_{thJC} d.c. 180° sine	Fig. No.
Part No.	Old Part No.	V	A	A	A^2s	µs	Q_r µC	@I_{TM} A	@-di/dt A/µs	V	mΩ	°C	K/W	
P0128SH10D	N/A	1000	128	1700	19×10^3	20	25	100	10	1.600	2.490	125	0.23	W17
P0128SH10E	N/A	1000	128	1700	19×10^3	25	25	100	10	1.600	2.490	125	0.23	W17
P0128SH10F	N/A	1000	128	1700	19×10^3	30	25	100	10	1.600	2.490	125	0.23	W17
P0128SH12D	N/A	1200	128	1700	19×10^3	20	25	100	10	1.600	2.490	125	0.23	W17
P0128SH12E	N/A	1200	128	1700	19×10^3	25	25	100	10	1.600	2.490	125	0.23	W17
P0128SH12F	N/A	1200	128	1700	19×10^3	30	25	100	10	1.600	2.490	125	0.23	W17
P0128SJ10D	N/A	1000	128	1700	19×10^3	20	25	100	10	1.600	2.490	125	0.23	W16
P0128SJ10E	N/A	1000	128	1700	19×10^3	25	25	100	10	1.600	2.490	125	0.23	W16
P0128SJ10F	N/A	1000	128	1700	19×10^3	30	25	100	10	1.600	2.490	125	0.23	W16
P0128SJ12D	N/A	1200	128	1700	19×10^3	20	25	100	10	1.600	2.490	125	0.23	W16
P0128SJ12E	N/A	1200	128	1700	19×10^3	25	25	100	10	1.600	2.490	125	0.23	W16
P0128SJ12F	N/A	1200	128	1700	19×10^3	30	25	100	10	1.600	2.490	125	0.23	W16
P0248SC10D	P200PH10	1000	248	2700	36.5×10^3	20	25	300	20	1.600	1.230	125	0.12	W18
P0248SC10E	P200PH10	1000	248	2700	36.5×10^3	25	25	300	20	1.600	1.230	125	0.12	W18
P0248SC10F	P200PH10	1000	248	2700	36.5×10^3	30	25	300	20	1.600	1.230	125	0.12	W18
P0248SC12D	P200PH12	1200	248	2700	36.5×10^3	20	25	300	20	1.600	1.230	125	0.12	W18
P0248SC12E	P200PH12	1200	248	2700	36.5×10^3	25	25	300	20	1.600	1.230	125	0.12	W18
P0248SC12F	P200PH12	1200	248	2700	36.5×10^3	30	25	300	20	1.600	1.230	125	0.12	W18
P0248SG10D	N/A	1000	248	2700	36.5×10^3	20	25	300	20	1.600	1.230	125	0.12	W25
P0248SG10E	N/A	1000	248	2700	36.5×10^3	25	25	300	20	1.600	1.230	125	0.12	W25
P0248SG10F	N/A	1000	248	2700	36.5×10^3	30	25	300	20	1.600	1.230	125	0.12	W25
P0248SG12D	N/A	1200	248	2700	36.5×10^3	20	25	300	20	1.600	1.230	125	0.12	W25
P0248SG12E	N/A	1200	248	2700	36.5×10^3	25	25	300	20	1.600	1.230	125	0.12	W25
P0248SG12F	N/A	1200	248	2700	36.5×10^3	30	25	300	20	1.600	1.230	125	0.12	W25
P0273SC10D	P202PH10	1000	273	3250	52.8×10^3	20	45	300	20	1.550	0.870	125	0.12	W18
P0273SC10E	P202PH10	1000	273	3250	52.8×10^3	25	45	300	20	1.550	0.870	125	0.12	W18
P0273SC10F	P202PH10	1000	273	3250	52.8×10^3	30	45	300	20	1.550	0.870	125	0.12	W18
P0273SC12D	P202PH12	1200	273	3250	52.8×10^3	20	45	300	20	1.550	0.870	125	0.12	W18
P0273SC12E	P202PH12	1200	273	3250	52.8×10^3	25	45	300	20	1.550	0.870	125	0.12	W18
P0273SC12F	P202PH12	1200	273	3250	52.8×10^3	30	45	300	20	1.550	0.870	125	0.12	W18
P0273SG10D	N/A	1000	273	3250	52.8×10^3	20	45	300	20	1.550	0.870	125	0.12	W25
P0273SG10E	N/A	1000	273	3250	52.8×10^3	25	45	300	20	1.550	0.870	125	0.12	W25
P0273SG10F	N/A	1000	273	3250	52.8×10^3	30	45	300	20	1.550	0.870	125	0.12	W25
P0273SG12D	N/A	1200	273	3250	52.8×10^3	20	45	300	20	1.550	0.870	125	0.12	W25
P0273SG12E	N/A	1200	273	3250	52.8×10^3	25	45	300	20	1.550	0.870	125	0.12	W25
P0273SG12F	N/A	1200	273	3250	52.8×10^3	30	45	300	20	1.550	0.870	125	0.12	W25
P0306SC04A	P214PH04	400	306	4700	101×10^3	10	25	300	20	1.400	0.670	125	0.12	W18
P0306SC04B	P214PH04	400	306	4700	101×10^3	12	25	300	20	1.400	0.670	125	0.12	W18
P0306SC04C	P214PH04	400	306	4700	101×10^3	15	25	300	20	1.400	0.670	125	0.12	W18
P0306SC08A	P214PH08	800	306	4700	101×10^3	10	25	300	20	1.400	0.670	125	0.12	W18
P0306SC08B	P214PH08	800	306	4700	101×10^3	12	25	300	20	1.400	0.670	125	0.12	W18
P0306SC08C	P214PH08	800	306	4700	101×10^3	15	25	300	20	1.400	0.670	125	0.12	W18
P0306SG04A	N/A	400	306	4700	101×10^3	10	25	300	20	1.400	0.670	125	0.12	W25
P0306SG04B	N/A	400	306	4700	101×10^3	12	25	300	20	1.400	0.670	125	0.12	W25
P0306SG04C	N/A	400	306	4700	101×10^3	15	25	300	20	1.400	0.670	125	0.12	W25
P0306SG08A	N/A	800	306	4700	101×10^3	10	25	300	20	1.400	0.670	125	0.12	W25
P0306SG08B	N/A	800	306	4700	101×10^3	12	25	300	20	1.400	0.670	125	0.12	W25
P0306SG08C	N/A	800	306	4700	101×10^3	15	25	300	20	1.400	0.670	125	0.12	W25

Outlines on pages 188 - 224

Fast Turn-Off Thyristors - Stud Types, continued

Type		V_{DRM} / V_{RRM}	I_{TAV} T_K= 55°C	I_{TSM} 10ms ½ sine $V_R \leq 60\%$ V_{RRM}	I^2t $V_R \leq 60\%$ V_{RRM}	t_q @ 200V/µs	Typ. Reverse Recovery Charge $T_{j\,max}$, 50% Chord Q_r	@I_{TM}	@-di/dt	V_{T0} @$T_{j\,max}$	r_T	$T_{j\,max}$	R_{thJC} d.c. 180° sine	Fig. No.
Part No.	Old Part No.	V	A	A	A^2s	µs	µC	A	A/µs	V	mΩ	°C	K/W	
P0311SC10E	P205PH10	1000	311	3600	64.8 x 10^3	25	30	300	20	1.170	0.920	125	0.12	W18
P0311SC10F	P205PH10	1000	311	3600	64.8 x 10^3	30	30	300	20	1.170	0.920	125	0.12	W18
P0311SC10G	P205PH10	1000	311	3600	64.8 x 10^3	35	30	300	20	1.170	0.920	125	0.12	W18
P0311SC12E	P205PH12	1200	311	3600	64.8 x 10^3	25	30	300	20	1.170	0.920	125	0.12	W18
P0311SC12F	P205PH12	1200	311	3600	64.8 x 10^3	30	30	300	20	1.170	0.920	125	0.12	W18
P0311SC12G	P205PH12	1200	311	3600	64.8 x 10^3	35	30	300	20	1.170	0.920	125	0.12	W18
P0311SG10E	N/A	1000	311	3600	64.8 x 10^3	25	30	300	20	1.170	0.920	125	0.12	W25
P0311SG10F	N/A	1000	311	3600	64.8 x 10^3	30	30	300	20	1.170	0.920	125	0.12	W25
P0311SG10G	N/A	1000	311	3600	64.8 x 10^3	35	30	300	20	1.170	0.920	125	0.12	W25
P0311SG12E	N/A	1200	311	3600	64.8 x 10^3	25	30	300	20	1.170	0.920	125	0.12	W25
P0311SG12F	N/A	1200	311	3600	64.8 x 10^3	30	30	300	20	1.170	0.920	125	0.12	W25
P0311SG12G	N/A	1200	311	3600	64.8 x 10^3	35	30	300	20	1.170	0.920	125	0.12	W25
P0330SC04C	P215PH04	400	330	5000	125 x 10^3	15	30	300	20	1.050	0.880	125	0.12	W18
P0330SC04D	P215PH04	400	330	5000	125 x 10^3	20	30	300	20	1.050	0.880	125	0.12	W18
P0330SC08C	P215PH08	800	330	5000	125 x 10^3	15	30	300	20	1.050	0.880	125	0.12	W18
P0330SC08D	P215PH08	800	330	5000	125 x 103	20	30	300	20	1.050	0.880	125	0.12	W18
P0330SG04C	N/A	400	330	5000	125 x 10^3	15	30	300	20	1.050	0.880	125	0.12	W25
P0330SG04D	N/A	400	330	5000	125 x 10^3	20	30	300	20	1.050	0.880	125	0.12	W25
P0330SG08C	N/A	800	330	5000	125 x 10^3	15	30	300	20	1.050	0.880	125	0.12	W25
P0330SG08D	N/A	800	330	5000	125 x 10^3	20	30	300	20	1.050	0.880	125	0.12	W25
P0431SC04B	P270PH04	400	431	6500	211 x 10^3	12	106	300	20	0.950	0.377	125	0.12	W18
P0431SC04C	P270PH04	400	431	6500	211 x 10^3	15	106	300	20	0.950	0.377	125	0.12	W18
P0431SC06B	P270PH06	600	431	6500	211 x 10^3	12	106	300	20	0.950	0.377	125	0.12	W18
P0431SC06C	P270PH06	600	431	6500	211 x 10^3	15	106	300	20	0.950	0.377	125	0.12	W18
P0431SG04B	N/A	400	431	6500	211 x 10^3	12	106	300	20	0.950	0.377	125	0.12	W25
P0431SG04C	N/A	400	431	6500	211 x 10^3	15	106	300	20	0.950	0.377	125	0.12	W25
P0431SG06B	N/A	600	431	6500	211 x 10^3	12	106	300	20	0.950	0.377	125	0.12	W25
P0431SG06C	N/A	600	431	6500	211 x 10^3	15	106	300	20	0.950	0.377	125	0.12	W25

Fig. W16
Weight 100 g

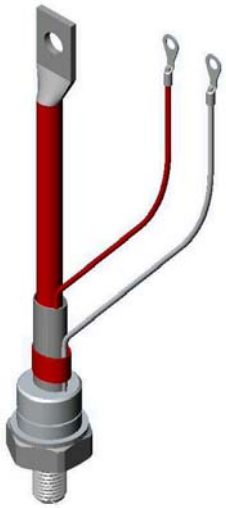

Fig. W17
Weight 130 g

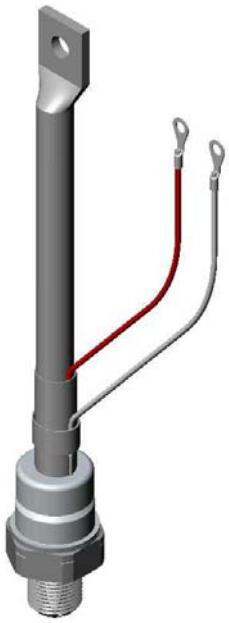

Fig. W18
Weight 250 g

Fig. W25
Weight 220g

Outlines on pages 188 - 224

WESTCODE

Westcode "P" series of fast switching thyristors have regenerative gate structure to ensure low switching losses and high di/dt performance. "P" Series devices are particularly attractive to; Inverter, DC chopper drives, UPS and Pulse Power applications. In addition to pressure contact technology these devices offer lower reverse recovery charge values, low forward switching losses and high reliability.

Fast Turn-Off Thyristors - Capsule Types

Type		V_{DRM} / V_{RRM}	I_{TAV} T_K= 55°C	I_{TSM} 10ms ½ sine $V_R \leq 60\%$ V_{RRM}	I^2t $V_R \leq 60\%$ V_{RRM}	t_q @ 200V/µs	Typ. Reverse Recovery Charge $T_{j\,max}$, 50% Chord Q_r	@I_{TM}	@-di/dt	V_{T0} @$T_{j\,max}$	r_T	$T_{j\,max}$	R_{thJK} d.c. 180° sine	Fig. No.
Part No.	Old Part No	V	A	A	A^2s	µs	µC	A	A/µs	V	mΩ	°C	K/W	
P0295WC12D	P200CH12	1200	295	2700	36.5 x 10^3	20	25	300	20	1.600	1.230	125	0.095	W8
P0295WC12E	P200CH12	1200	295	2700	36.5 x 10^3	25	25	300	20	1.600	1.230	125	0.095	W8
P0295WC12F	P200CH12	1200	295	2700	36.5 x 10^3	30	25	300	20	1.600	1.230	125	0.095	W8
P0327WC12D	P202CH12	1200	327	3250	52.8 x 10^3	20	45	300	20	1.550	0.870	125	0.095	W8
P0327WC12E	P202CH12	1200	327	3250	52.8 x 10^3	25	45	300	20	1.550	0.870	125	0.095	W8
P0327WC12F	P202CH12	1200	327	3250	52.8 x 10^3	30	45	300	20	1.550	0.870	125	0.095	W8
P0366WC04A	P214CH04	400	366	4700	110 x 10^3	10	20	300	20	1.400	0.670	125	0.095	W8
P0366WC04B	P214CH04	400	366	4700	110 x 10^3	12	20	300	20	1.400	0.670	125	0.095	W8
P0366WC04C	P214CH04	400	366	4700	110 x 10^3	15	20	300	20	1.400	0.670	125	0.095	W8
P0366WC08A	P214CH08	800	366	4700	110 x 10^3	10	20	300	20	1.400	0.670	125	0.095	W8
P0366WC08B	P214CH08	800	366	4700	110 x 10^3	12	20	300	20	1.400	0.670	125	0.095	W8
P0366WC08C	P214CH08	800	366	4700	110 x 10^3	15	20	300	20	1.400	0.670	125	0.095	W8
P0367WC12E	P205CH12	1200	367	3600	64.8 x 10^3	25	45	300	20	1.170	0.920	125	0.095	W8
P0367WC12F	P205CH12	1200	367	3600	64.8 x 10^3	30	45	300	20	1.170	0.920	125	0.095	W8
P0367WC12G	P205CH12	1200	367	3600	64.8 x 10^3	35	45	300	20	1.170	0.920	125	0.095	W8
P0389WC04C	P215CH04	400	389	5000	125 x 10^3	15	30	300	20	1.050	0.880	125	0.095	W8
P0389WC04D	P215CH04	400	389	5000	125 x 10^3	20	30	300	20	1.050	0.880	125	0.095	W8
P0389WC08C	P215CH08	800	389	5000	125 x 10^3	15	30	300	20	1.050	0.880	125	0.095	W8
P0389WC08D	P215CH08	800	389	5000	125 x 10^3	20	30	300	20	1.050	0.880	125	0.095	W8
P0515WC04B	P270CH04	400	515	6500	211 x10^3	12	100	300	20	0.950	0.377	125	0.095	W8
P0515WC04C	P270CH04	400	515	6500	211 x10^3	15	100	300	20	0.950	0.377	125	0.095	W8
P0515WC04D	P270CH04	400	515	6500	211 x10^3	20	100	300	20	0.950	0.377	125	0.095	W8
P0515WC06B	P270CH06	600	515	6500	211 x10^3	12	100	300	20	0.950	0.377	125	0.095	W8
P0515WC06C	P270CH06	600	515	6500	211 x10^3	15	100	300	20	0.950	0.377	125	0.095	W8
P0515WC06D	P270CH06	600	515	6500	211 x10^3	20	100	300	20	0.950	0.377	125	0.095	W8
P0848YS04B	P280SH04	400	848	8750	383 x 10^3	12	80	550	40	1.010	0.305	125	0.050	W9
P0848YS04C	P280SH04	400	848	8750	383 x 10^3	15	80	550	40	1.010	0.305	125	0.050	W9
P0848YS04D	P280SH04	400	848	8750	383 x 10^3	20	80	550	40	1.010	0.305	125	0.050	W9
P0848YS06B	P280SH06	600	848	8750	383 x 10^3	12	80	550	40	1.010	0.305	125	0.050	W9
P0848YS06C	P280SH06	600	848	8750	383 x 10^3	51	80	550	40	1.010	0.305	125	0.050	W9
P0848YS06D	P280SH06	600	848	8750	383 x 10^3	20	80	550	40	1.010	0.305	125	0.050	W9
P1007LS12D	P300SH12	1200	1007	9500	451 x 10^3	20	200	800	50	1.509	0.265	125	0.032	W10a
P1007LS12E	P300SH12	1200	1007	9500	451 x 10^3	25	200	800	50	1.509	0.265	125	0.032	W10a
P1007LS12F	P300SH12	1200	1007	9500	451 x 10^3	30	200	800	50	1.509	0.265	125	0.032	W10a

Fig. W8
Weight 70 g

Fig. W10a
Weight 340 g

Fig. W9
Weight 90 g

Outlines on pages 188 - 224

WESTCODE

Recognised as the worldwide leader in distributed gate thyristor technology, these devices are available with blocking voltages to 5.2kV and currents to 3kA, with t_q from 10 to 300µs.

The unique distributed gate design and lifetime control features give these devices both high di/dt capability and fast low recovery turn-off, while maintaining a low forward voltage drop.

Ideally suited to applications including; induction heating, power supplies, high frequency inverters/converters, UPS and pulse power.

Distributed Gate Thyristors - Capsule Types

Type		V_{DRM} /V_{RRM}	I_{TAV} T_K= 55°C	I_{TSM} 10ms ½ sine $V_R \leq 60\%$ V_{RRM}	I^2t $V_R \leq 60\%$ V_{RRM}	t_q @ 200V/µs	Typ. Reverse Recovery Charge $T_{j\,max}$, 50% Chord Q_{ra}	@ I_{TM}	@ -di/dt	V_{T0} @$T_{j\,max}$	r_T	$T_{j\,max}$	R_{thJK} 180° Sine	Fig. No.
Part No.	Old Part No	V	A	A	A^2s	µs	µC	A	A/µs	V	mΩ	°C	K/W	
R0487YS10D	R210SH10	1000	487	4300	92.45×10^3	20	40	550	40	1.738	0.943	125	0.050	W9
R0487YS10E	R210SH10	1000	487	4300	92.45×10^3	25	40	550	40	1.738	0.943	125	0.050	W9
R0487YS10F	R210SH10	1000	487	4300	92.45×10^3	30	40	550	40	1.738	0.943	125	0.050	W9
R0487YS14D	R210SH14	1400	487	4300	92.45×10^3	20	40	550	40	1.738	0.943	125	0.050	W9
R0487YS14E	R210SH14	1400	487	4300	92.45×10^3	25	40	550	40	1.738	0.943	125	0.050	W9
R0487YS14F	R210SH14	1400	487	4300	92.45×10^3	30	40	550	40	1.738	0.943	125	0.050	W9
R0577YS08C	R185SH08	800	577	6000	180×10^3	15	85	550	40	1.510	0.640	125	0.050	W9
R0577YS08D	R185SH08	800	577	6000	180×10^3	20	85	550	40	1.510	0.640	125	0.050	W9
R0577YS08E	R185SH08	800	577	6000	180×10^3	25	85	550	40	1.510	0.640	125	0.050	W9
R0577YS12C	R185SH12	1200	577	6000	180×10^3	15	85	550	40	1.510	0.640	125	0.050	W9
R0577YS12D	R185SH12	1200	577	6000	180×10^3	20	85	550	40	1.510	0.640	125	0.050	W9
R0577YS12E	R185SH12	1200	577	6000	180×10^3	25	85	550	40	1.510	0.640	125	0.050	W9
R0633YS08D	R216SH08	800	633	6300	199×10^3	20	85	125	40	1.250	0.614	125	0.050	W9
R0633YS08E	R216SH08	800	633	6300	199×10^3	25	85	125	40	1.250	0.614	125	0.050	W9
R0633YS08F	R216SH08	800	633	6300	199×10^3	30	85	125	40	1.250	0.614	125	0.050	W9
R0633YS12D	R216SH12	1200	633	6300	199×10^3	20	85	125	40	1.250	0.612	125	0.050	W9
R0633YS12E	R216SH12	1200	633	6300	199×10^3	25	85	125	40	1.250	0.614	125	0.050	W9
R0633YS12F	R216SH12	1200	633	6300	199×10^3	30	85	125	40	1.250	0.614	125	0.050	W9
R0717LS14G	R181SH06	1400	717	7050	249×10^3	35	150	1000	60	1.752	0.732	125	0.032	W10a
R0717LS14H	R181SH06	1400	717	7050	249×10^3	40	150	1000	60	1.752	0.732	125	0.032	W10a
R0717LS14J	R181SH06	1400	717	7050	249×10^3	50	150	1000	60	1.752	0.732	125	0.032	W10a
R0717LS16G	R181SH10	1600	717	7050	249×10^3	35	150	1000	60	1.752	0.732	125	0.032	W10a
R0717LS16H	R181SH10	1600	717	7050	249×10^3	40	150	1000	60	1.752	0.732	125	0.032	W10a
R0717LS16J	R181SH10	1600	717	7050	249×10^3	50	150	1000	60	1.752	0.732	125	0.032	W10a
R0736LS20J	R175SH20	2000	736	6800	231×10^3	50	240	1000	60	1.842	0.619	125	0.032	W10a
R0736LS20K	R175SH20	2000	736	6800	231×10^3	60	240	1000	60	1.842	0.619	125	0.032	W10a
R0736LS20L	R175SH20	2000	736	6800	231×10^3	65	240	1000	60	1.842	0.619	125	0.032	W10a
R0736LS20M	R175SH20	2000	736	6800	231×10^3	70	240	1000	60	1.842	0.619	125	0.032	W10a
R0736LS25J	R175SH25	2500	736	6800	231×10^3	50	240	1000	60	1.842	0.619	125	0.032	W10a
R0736LS25K	R175SH25	2500	736	6800	231×10^3	60	240	1000	60	1.842	0.619	125	0.032	W10a
R0736LS25L	R175SH25	2500	736	6800	231×10^3	65	240	1000	60	1.842	0.619	125	0.032	W10a
R0736LS25M	R175SH25	2500	736	6800	231×10^3	70	240	1000	60	1.842	0.619	125	0.032	W10a
R0809LS06A	R180SH06	600	809	8000	320×10^3	10	50	1000	60	2.100	0.300	125	0.032	W10a
R0809LS06B	R180SH06	600	809	8000	320×10^3	12	50	1000	60	2.100	0.300	125	0.032	W10a
R0809LS06C	R180SH06	600	809	8000	320×10^3	15	50	1000	60	2.100	0.300	125	0.032	W10a
R0809LS10A	R180SH10	1000	809	8000	320×10^3	10	50	1000	60	2.100	0.300	125	0.032	W10a
R0809LS10B	R180SH10	1000	809	8000	320×10^3	12	50	1000	60	2.100	0.300	125	0.032	W10a
R0809LS10C	R180SH10	1000	809	8000	320×10^3	15	50	1000	60	2.100	0.300	125	0.032	W10a
R0830LS10D	R190SH10	1000	830	8500	361×10^3	20	110	1000	60	1.900	0.357	125	0.032	W10a
R0830LS10E	R190SH10	1000	830	8500	361×10^3	25	110	1000	60	1.900	0.357	125	0.032	W10a
R0830LS10F	R190SH10	1000	830	8500	361×10^3	30	110	1000	60	1.900	0.357	125	0.032	W10a
R0830LS10G	R190SH10	1000	830	8500	361×10^3	35	110	1000	60	1.900	0.357	125	0.032	W10a
R0830LS14D	R190SH14	1400	830	8500	361×10^3	20	110	1000	60	1.900	0.357	125	0.032	W10a
R0830LS14E	R190SH14	1400	830	8500	361×10^3	25	110	1000	60	1.900	0.357	125	0.032	W10a
R0830LS14F	R190SH14	1400	830	8500	361×10^3	30	110	1000	60	1.900	0.357	125	0.032	W10a
R0830LS14G	R190SH14	1400	830	8500	361×10^3	35	110	1000	60	1.900	0.357	125	0.032	W10a
R0878LS14K	R200SH16	1600	878	7500	281×10^3	60	350	1000	60	1.447	0.480	125	0.032	W10a
R0878LS14M	R200SH16	1600	878	7500	281×10^3	70	350	1000	60	1.447	0.480	125	0.032	W10a
R0878LS18K	R200SH18	1800	878	7500	281×10^3	60	350	1000	60	1.447	0.480	125	0.032	W10a
R0878LS18M	R200SH18	1800	878	7500	281×10^3	70	350	1000	60	1.447	0.480	125	0.032	W10a
R0878LS21K	R200SH21	2100	878	7500	281×10^3	60	350	1000	60	1.447	0.480	125	0.032	W10a
R0878LS21M	R200SH21	2100	878	7500	281×10^3	70	350	1000	60	1.447	0.480	125	0.032	W10a

Outlines on pages 188 - 224

Distributed Gate Thyristors - Capsule Types, continued

Type		V_{DRM} /V_{RRM}	I_{TAV} T_K= 55°C	I_{TSM} 10ms ½ sine $V_R \leq 60\%$ V_{RRM}	I^2t $V_R \leq 60\%$ V_{RRM}	t_q @ 200V/µs	Typ. Reverse Recovery Charge $T_{j\,max}$, 50% Chord Q_{ra}	@ I_{TM}	@ -di/dt	V_{T0} @$T_{j\,max}$	r_T	$T_{j\,max}$	R_{thJK} 180° Sine	Fig. No.
Part No.	Old Part No	V	A	A	A^2s	µs	µC	A	A/µs	V	mΩ	°C	K/W	
R0929LS08C	R219SH08	800	929	9000	405×10^3	15	85	1000	60	1.549	0.350	125	0.032	W10a
R0929LS08D	R219SH08	800	929	9000	405×10^3	20	85	1000	60	1.549	0.350	125	0.032	W10a
R0929LS08E	R219SH08	800	929	9000	405×10^3	25	85	1000	60	1.549	0.350	125	0.032	W10a
R0929LS12C	R219SH12	1200	929	9000	405×10^3	15	85	1000	60	1.549	0.350	125	0.032	W10a
R0929LS12D	R219SH12	1200	929	9000	405×10^3	20	85	1000	60	1.549	0.350	125	0.032	W10a
R0929LS12E	R219SH12	1200	929	9000	405×10^3	25	85	1000	60	1.549	0.350	125	0.032	W10a
R0964LS08D	R220SH08	800	964	9400	442×10^3	20	75	1000	60	1.530	0.309	125	0.032	W10a
R0964LS08E	R220SH08	800	964	9400	442×10^3	25	75	1000	60	1.530	0.309	125	0.032	W10a
R0964LS08F	R220SH08	800	964	9400	442×10^3	30	75	1000	60	1.530	0.309	125	0.032	W10a
R0964LS12D	R220SH12	1200	964	9400	442×10^3	20	75	1000	60	1.530	0.309	125	0.032	W10a
R0964LS12E	R220SH12	1200	964	9400	442×10^3	25	75	1000	60	1.530	0.309	125	0.032	W10a
R0964LS12F	R220SH12	1200	964	9400	442×10^3	30	75	1000	60	1.530	0.309	125	0.032	W10a
R0990LS04A	R270SH08	800	990	11000	605×10^3	10	40	1000	60	1.350	0.350	125	0.032	W10a
R0990LS04B	R270SH08	800	990	11000	605×10^3	12	40	1000	60	1.350	0.350	125	0.032	W10a
R0990LS04C	R270SH08	800	990	11000	605×10^3	15	40	1000	60	1.350	0.350	125	0.032	W10a
R0990LS08A	R270SH12	1200	990	11000	605×10^3	10	40	1000	60	1.350	0.350	125	0.032	W10a
R0990LS08B	R270SH12	1200	990	11000	605×10^3	12	40	1000	60	1.350	0.350	125	0.032	W10a
R0990LS08C	R270SH12	1200	990	11000	605×10^3	15	40	1000	60	1.350	0.350	125	0.032	W10a
R1124NS14K	R305SH14	1400	1124	13500	911×10^3	60	400	1000	60	1.540	0.379	125	0.024	W11a
R1124NS14M	R305SH14	1400	1124	13500	911×10^3	70	400	1000	60	1.540	0.379	125	0.024	W11a
R1124NS18K	R305SH18	1800	1124	13500	911×10^3	60	400	1000	60	1.540	0.379	125	0.024	W11a
R1124NS18M	R305SH18	1800	1124	13500	911×10^3	70	400	1000	60	1.540	0.379	125	0.024	W11a
R1124NS21K	R305SH21	2100†	1124	13500	911×10^3	60	400	1000	60	1.540	0.379	125	0.024	W11a
R1124NS21M	R305SH21	2100†	1124	13500	911×10^3	70	400	1000	60	1.540	0.379	125	0.024	W11a
R1127NC32R	D315CH32	3200	1127	12800	819×10^3	140	1500	1000	60	1.500	0.474	125	0.022	W11
R1127NC32S	D315CH32	3200	1127	12800	819×10^3	160	1500	1000	60	1.500	0.474	125	0.022	W11
R1127NC32T	D315CH32	3200	1127	12800	819×10^3	200	1500	1000	60	1.500	0.474	125	0.022	W11
R1127NC36R	D315CH36	3600	1127	12800	819×10^3	140	1500	1000	60	1.500	0.474	125	0.022	W11
R1127NC36S	D315CH36	3600	1127	12800	819×10^3	160	1500	1000	60	1.500	0.474	125	0.022	W11
R1127NC36T	D315CH36	3600	1127	12800	819×10^3	200	1500	1000	60	1.500	0.474	125	0.022	W11
R1158NS24N	D350SH24	2400	1158	14500	1.05×10^6	100	900	1000	60	1.600	0.400	125	0.022	W11a
R1158NS24P	D350SH24	2400	1158	14500	1.05×10^6	120	900	1000	60	1.600	0.400	125	0.022	W11a
R1158NS26N	D350SH26	2600	1158	14500	1.05×10^6	100	900	1000	60	1.600	0.400	125	0.022	W11a
R1158NS26P	D350SH26	2600	1158	14500	1.05×10^6	120	900	1000	60	1.600	0.400	125	0.022	W11a
R1178NS10E	R325SH10	1000	1178	17000	1.45×10^6	25	170	1000	60	1.600	0.300	125	0.024	W11a
R1178NS10F	R325SH10	1000	1178	17000	1.45×10^6	30	170	1000	60	1.600	0.300	125	0.024	W11a
R1178NS10G	R325SH10	1000	1178	17000	1.45×10^6	35	170	1000	60	1.600	0.300	125	0.024	W11a
R1178NS14E	R325SH14	1400	1178	17000	1.45×10^6	25	170	1000	60	1.600	0.300	125	0.024	W11a
R1178NS14F	R325SH14	1400	1178	17000	1.45×10^6	30	170	1000	60	1.600	0.300	125	0.024	W11a
R1178NS14G	R325SH14	1400	1178	17000	1.45×10^6	35	170	1000	60	1.600	0.300	125	0.024	W11a
R1211NS08D	R350SH08	800	1211	17600	1.55×10^6	20	100	1000	60	1.720	0.230	125	0.024	W11a
R1211NS08E	R350SH08	800	1211	17600	1.55×10^6	25	100	1000	60	1.720	0.230	125	0.024	W11a
R1211NS12D	R350SH12	1200	1211	17600	1.55×10^6	20	100	1000	60	1.720	0.230	125	0.024	W11a
R1211NS12E	R350SH12	1200	1211	17600	1.55×10^6	25	100	1000	60	1.720	0.230	125	0.024	W11a
R1271NS08D	R355SH08	800	1271	18000	1.62×10^6	20	120	1000	60	1.550	0.236	125	0.024	W11a
R1271NS08E	R355SH08	800	1271	18000	1.62×10^6	25	120	1000	60	1.550	0.236	125	0.024	W11a
R1271NS08G	R355SH08	800	1271	18000	1.62×10^6	35	120	1000	60	1.550	0.236	125	0.024	W11a
R1271NS12D	R355SH12	1200	1271	18000	1.62×10^6	20	120	1000	60	1.550	0.236	125	0.024	W11a
R1271NS12E	R355SH12	1200	1271	18000	1.62×10^6	25	120	1000	60	1.550	0.236	125	0.024	W11a
R1271NS12G	R355SH12	1200	1271	18000	1.62×10^6	35	120	1000	60	1.550	0.236	125	0.024	W11a
R1275NS14L	R395SH14	1400	1275	15500	1.20×10^6	65	420	1000	60	1.207	0.342	125	0.024	W11a
R1275NS14M	R395SH14	1400	1275	15500	1.20×10^6	70	420	1000	60	1.207	0.342	125	0.024	W11a
R1275NS18L	R395SH18	1800	1275	15500	1.20×10^6	65	420	1000	60	1.207	0.342	125	0.024	W11a
R1275NS18M	R395SH18	1800	1275	15500	1.20×10^6	70	420	1000	60	1.207	0.342	125	0.024	W11a
R1275NS21L	R395SH21	2100†	1275	15500	1.20×10^6	65	420	1000	60	1.207	0.342	125	0.024	W11a
R1275NS21M	R395SH21	2100†	1275	15500	1.20×10^6	70	420	1000	60	1.207	0.342	125	0.024	W11a

Outlines on pages 188 - 224

Distributed Gate Thyristors - Capsule Types, continued

Type		V_{DRM} /V_{RRM}	I_{TAV} T_K= 55°C	I_{TSM} 10ms ½ sine $V_R \leq 60\%$ V_{RRM}	I^2t $V_R \leq 60\%$ V_{RRM}	t_q @ 200V/µs	Typ. Reverse Recovery Charge $T_{j\,max}$, 50% Chord Q_{ra}	@ I_{TM}	@ -di/dt	V_{T0} @$T_{j\,max}$	r_T	$T_{j\,max}$	R_{thJK} 180° Sine	Fig. No.
Part No.	Old Part No	V	A	A	A^2s	µs	µC	A	A/µs	V	mΩ	°C	K/W	
R1279NS22J	D391SH22	2200	1279	14800	1.10×10^6	50	700	1000	60	1.440	0.330	125	0.022	W11a
R1279NS22K	D391SH22	2200	1279	14800	1.10×10^6	60	700	1000	60	1.440	0.330	125	0.022	W11a
R1279NS22M	D391SH22	2200	1279	14800	1.10×10^6	70	700	1000	60	1.440	0.330	125	0.022	W11a
R1279NS25J	D391SH25	2500	1279	14800	1.10×10^6	50	700	1000	60	1.440	0.330	125	0.022	W11a
R1279NS25K	D391SH25	2500	1279	14800	1.10×10^6	60	700	1000	60	1.440	0.330	125	0.022	W11a
R1279NS25M	D391SH25	2500	1279	14800	1.10×10^6	70	700	1000	60	1.440	0.330	125	0.022	W11a
R1280NS18J	D390SH18	1800	1280	14800	1.10×10^6	50	600	1000	60	1.440	0.330	125	0.022	W11a
R1280NS18K	D390SH18	1800	1280	14800	1.10×10^6	60	600	1000	60	1.440	0.330	125	0.022	W11a
R1280NS18M	D390SH18	1800	1280	14800	1.10×10^6	70	600	1000	60	1.440	0.330	125	0.022	W11a
R1280NS21J	D390SH21	2100	1280	14800	1.10×10^6	50	600	1000	60	1.440	0.330	125	0.022	W11a
R1280NS21K	D390SH21	2100	1280	14800	1.10×10^6	60	600	1000	60	1.440	0.330	125	0.022	W11a
R1280NS21M	D390SH21	2100	1280	14800	1.10×10^6	70	600	1000	60	1.440	0.330	125	0.022	W11a
R1280NS25J	D390SH25	2500	1280	14800	1.10×10^6	50	600	1000	60	1.440	0.330	125	0.022	W11a
R1280NS25K	D390SH25	2500	1280	14800	1.10×10^6	60	600	1000	60	1.440	0.330	125	0.022	W11a
R1280NS25M	D390SH25	2500	1280	14800	1.10×10^6	70	600	1000	60	1.440	0.330	125	0.022	W11a
R1331NS10B	D450SH10	1000	1331	18200	1.66×10^6	12	80	1000	60	1.450	0.285	125	0.022	W11a
R1331NS10C	D450SH10	1000	1331	18200	1.66×10^6	15	80	1000	60	1.450	0.285	125	0.022	W11a
R1331NS10D	D450SH10	1000	1331	18200	1.66×10^6	20	80	1000	60	1.450	0.285	125	0.022	W11a
R1331NS12B	D450SH12	1200	1331	18200	1.66×10^6	12	80	1000	60	1.450	0.285	125	0.022	W11a
R1331NS12C	D450SH12	1200	1331	18200	1.66×10^6	15	80	1000	60	1.450	0.285	125	0.022	W11a
R1331NS12D	D450SH12	1200	1331	18200	1.66×10^6	20	80	1000	60	1.450	0.285	125	0.022	W11a
R1446NS08E	R400SH08	800	1446	19500	1.90×10^6	25	120	1000	60	1.304	0.200	125	0.024	W11a
R1446NS08F	R400SH08	800	1446	19500	1.90×10^6	30	120	1000	60	1.304	0.200	125	0.024	W11a
R1446NS08G	R400SH08	800	1446	19500	1.90×10^6	35	120	1000	60	1.304	0.200	125	0.024	W11a
R1446NS12E	R400SH12	1200	1446	19500	1.90×10^6	25	120	1000	60	1.304	0.200	125	0.024	W11a
R1446NS12F	R400SH12	1200	1446	19500	1.90×10^6	30	120	1000	60	1.304	0.200	125	0.024	W11a
R1446NS12G	R400SH12	1200	1446	19500	1.90×10^6	35	120	1000	60	1.304	0.200	125	0.024	W11a
R1448NS14H	D405SH14	1400	1448	15500	1.20×10^6	40	500	1000	60	1.350	0.250	125	0.022	W11a
R1448NS14J	D405SH14	1400	1448	15500	1.20×10^6	50	500	1000	60	1.350	0.250	125	0.022	W11a
R1448NS14L	D405SH14	1400	1448	15500	1.20×10^6	65	500	1000	60	1.350	0.250	125	0.022	W11a
R1448NS18H	D405SH18	1800	1448	15500	1.20×10^6	40	500	1000	60	1.350	0.250	125	0.022	W11a
R1448NS18J	D405SH18	1800	1448	15500	1.20×10^6	50	500	1000	60	1.350	0.250	125	0.022	W11a
R1448NS18L	D405SH18	1800	1448	15500	1.20×10^6	65	500	1000	60	1.350	0.250	125	0.022	W11a
R1448NS20H	N/A	2000	1448	15500	1.20×10^6	40	500	1000	60	1.350	0.250	125	0.022	W11a
R1448NS20J	N/A	2000	1448	15500	1.20×10^6	50	500	1000	60	1.350	0.250	125	0.022	W11a
R1448NS20L	N/A	2000	1448	15500	1.20×10^6	65	500	1000	60	1.350	0.250	125	0.022	W11a
R2475ZC20N	R500CH20	2000	2475	31000	4.81×10^6	100	1700	4000	60	1.504	0.174	125	0.011	W13
R2475ZC28N	R500CH28	2800	2475	31000	4.81×10^6	100	1700	4000	60	1.504	0.174	125	0.011	W13
R2475ZD20N	R500DH20	2000	2475	31000	4.81×10^6	100	1700	4000	60	1.504	0.174	125	0.011	W46
R2475ZD28N	R500DH28	2800	2475	31000	4.81×10^6	100	1700	4000	60	1.504	0.174	125	0.011	W46
R2619ZC18J	R600CH18	1800	2619	33800	5.71×10^6	50	1100	4000	60	1.308	0.173	125	0.011	W13
R2619ZC18K	R600CH18	1800	2619	33800	5.71×10^6	60	1100	4000	60	1.308	0.173	125	0.011	W13
R2619ZC18L	R600CH18	1800	2619	33800	5.71×10^6	65	1100	4000	60	1.308	0.173	125	0.011	W13
R2619ZC21J	R600CH21	2100†	2619	33800	5.71×10^6	50	1100	4000	60	1.308	0.173	125	0.011	W13
R2619ZC21K	R600CH21	2100†	2619	33800	5.71×10^6	60	1100	4000	60	1.308	0.173	125	0.011	W13
R2619ZC21L	R600CH21	2100†	2619	33800	5.71×10^6	65	1100	4000	60	1.308	0.173	125	0.011	W13
R2619ZC25J	R600CH25	2500†	2619	33800	5.71×10^6	50	1100	4000	60	1.308	0.173	125	0.011	W13
R2619ZC25K	R600CH25	2500†	2619	33800	5.71×10^6	60	1100	4000	60	1.308	0.173	125	0.011	W13
R2619ZC25L	R600CH25	2500†	2619	33800	5.71×10^6	65	1100	4000	60	1.308	0.173	125	0.011	W13
R2619ZD18J	N/A	1800	2619	33800	5.71×10^6	50	1100	4000	60	1.308	0.173	125	0.011	W46
R2619ZD18K	N/A	1800	2619	33800	5.71×10^6	60	1100	4000	60	1.308	0.173	125	0.011	W46
R2619ZD18L	N/A	1800	2619	33800	5.71×10^6	65	1100	4000	60	1.308	0.173	125	0.011	W46
R2619ZD21J	N/A	2100†	2619	33800	5.71×10^6	50	1100	4000	60	1.308	0.173	125	0.011	W46
R2619ZD21K	N/A	2100†	2619	33800	5.71×10^6	60	1100	4000	60	1.308	0.173	125	0.011	W46
R2619ZD21L	N/A	2100†	2619	33800	5.71×10^6	65	1100	4000	60	1.308	0.173	125	0.011	W46
R2619ZD25J	N/A	2500†	2619	33800	5.71×10^6	50	1100	4000	60	1.308	0.173	125	0.011	W46
R2619ZD25K	N/A	2500†	2619	33800	5.71×10^6	60	1100	4000	60	1.308	0.173	125	0.011	W46
R2619ZD25L	N/A	2500†	2619	33800	5.71×10^6	65	1100	4000	60	1.308	0.173	125	0.011	W46

NB: † - V_{rrm} 1800V max

Distributed Gate Thyristors - Capsule Types, continued

Type		V_{DRM} /V_{RRM}	I_{TAV} T_K= 55°C	I_{TSM} 10ms ½ sine $V_R \leq 60\%$ V_{RRM}	I^2t $V_R \leq 60\%$ V_{RRM}	t_q @ 200V/µs	Typ. Reverse Recovery Charge $T_{j\,max}$, 50% Chord Q_{ra}	@ I_{TM}	@ -di/dt	V_{T0} @$T_{j\,max}$	r_T	$T_{j\,max}$	R_{thJK} 180° Sine	Fig. No.
Part No.	Old Part No	V	A	A	A^2s	µs	µC	A	A/µs	V	mΩ	°C	K/W	
R2620ZC22J	R610CH22	2200	2620	33800	5.71×10^6	50	1200	4000	60	1.500	0.143	125	0.011	W13
R2620ZC22K	R610CH22	2200	2620	33800	5.71×10^6	60	1200	4000	60	1.500	0.143	125	0.011	W13
R2620ZC22L	R610CH22	2200	2620	33800	5.71×10^6	65	1200	4000	60	1.500	0.143	125	0.011	W13
R2620ZC25J	R610CH25	2500	2620	33800	5.71×10^6	50	1200	4000	60	1.500	0.143	125	0.011	W13
R2620ZC25K	R610CH25	2500	2620	33800	5.71×10^6	60	1200	4000	60	1.500	0.143	125	0.011	W13
R2620ZC25L	R610CH25	2500	2620	33800	5.71×10^6	65	1200	4000	60	1.500	0.143	125	0.011	W13
R2620ZD22J	N/A	2200	2620	33800	5.71×10^6	50	1200	4000	60	1.500	0.143	125	0.011	W46
R2620ZD22K	N/A	2200	2620	33800	5.71×10^6	60	1200	4000	60	1.500	0.143	125	0.011	W46
R2620ZD22L	N/A	2200	2620	33800	5.71×10^6	65	1200	4000	60	1.500	0.143	125	0.011	W46
R2620ZD25J	N/A	2500	2620	33800	5.71×10^6	50	1200	4000	60	1.500	0.143	125	0.011	W46
R2620ZD25K	N/A	2500	2620	33800	5.71×10^6	60	1200	4000	60	1.500	0.143	125	0.011	W46
R2620ZD25L	N/A	2500	2620	33800	5.71×10^6	65	1200	4000	60	1.500	0.143	125	0.011	W46
R2714ZC16H	R800CH16	1600	2714	35600	6.34×10^6	40	700	4000	60	1.250	0.163	125	0.011	W13
R2714ZC16J	R800CH16	1600	2714	35600	6.34×10^6	50	700	4000	60	1.250	0.163	125	0.011	W13
R2714ZC16K	R800CH16	1600	2714	35600	6.34×10^6	60	700	4000	60	1.250	0.163	125	0.011	W13
R2714ZC18H	R800CH18	1800	2714	35600	6.34×10^6	40	700	4000	60	1.250	0.163	125	0.011	W13
R2714ZC18J	R800CH18	1800	2714	35600	6.34×10^6	50	700	4000	60	1.250	0.163	125	0.011	W13
R2714ZC18K	R800CH18	1800	2714	35600	6.34×10^6	60	700	4000	60	1.250	0.163	125	0.011	W13
R2714ZD16H	N/A	1600	2714	35600	6.34×10^6	40	700	4000	60	1.250	0.163	125	0.011	W46
R2714ZD16J	N/A	1600	2714	35600	6.34×10^6	50	700	4000	60	1.250	0.163	125	0.011	W46
R2714ZD16K	N/A	1600	2714	35600	6.34×10^6	60	700	4000	60	1.250	0.163	125	0.011	W46
R2714ZD18H	N/A	1800	2714	35600	6.34×10^6	40	700	4000	60	1.250	0.163	125	0.011	W46
R2714ZD18J	N/A	1800	2714	35600	6.34×10^6	50	700	4000	60	1.250	0.163	125	0.011	W46
R2714ZD18K	N/A	1800	2714	35600	6.34×10^6	60	700	4000	60	1.250	0.163	125	0.011	W46
R3047TC24N	R1863CH24	2400	3047	50000	12.5×10^6	100	1400	4000	60	1.580	0.170	125	0.008	W14
R3047TC24R	R1863CH24	2400	3047	50000	12.5×10^6	140	1400	4000	60	1.580	0.170	125	0.008	W14
R3047TC24T	R1863CH24	2400	3047	50000	12.5×10^6	200	1400	4000	60	1.580	0.170	125	0.008	W14
R3047TC28N	R1863CH28	2800	3047	50000	12.5×10^6	100	1400	4000	60	1.580	0.170	125	0.008	W14
R3047TC28R	R1863CH28	2800	3047	50000	12.5×10^6	140	1400	4000	60	1.580	0.170	125	0.008	W14
R3047TC28T	R1863CH28	2800	3047	50000	12.5×10^6	200	1400	4000	60	1.580	0.170	125	0.008	W14
R3047TD24N	R1863DH24	2400	3047	50000	12.5×10^6	100	1400	4000	60	1.580	0.170	125	0.008	W19
R3047TD24R	R1863DH24	2400	3047	50000	12.5×10^6	140	1400	4000	60	1.580	0.170	125	0.008	W19
R3047TD24T	R1863DH24	2400	3047	50000	12.5×10^6	200	1400	4000	60	1.580	0.170	125	0.008	W19
R3047TD28N	R1863DH28	2800	3047	50000	12.5×10^6	100	1400	4000	60	1.580	0.170	125	0.008	W19
R3047TD28R	R1863DH28	2800	3047	50000	12.5×10^6	140	1400	4000	60	1.580	0.170	125	0.008	W19
R3047TD28T	R1863DH28	2800	3047	50000	12.5×10^6	200	1400	4000	60	1.580	0.170	125	0.008	W19
R3370ZC10C	R1200CH10	1000	3370	43900	9.64×10^6	15	240	4000	60	1.353	0.064	125	0.011	W13
R3370ZC10D	R1200CH10	1000	3370	43900	9.64×10^6	20	240	4000	60	1.353	0.064	125	0.011	W13
R3370ZC10E	R1200CH10	1000	3370	43900	9.64×10^6	25	240	4000	60	1.353	0.064	125	0.011	W13
R3370ZC12C	R1200CH12	1200	3370	43900	9.64×10^6	15	240	4000	60	1.353	0.064	125	0.011	W13
R3370ZC12D	R1200CH12	1200	3370	43900	9.64×10^6	20	240	4000	60	1.353	0.064	125	0.011	W13
R3370ZC12E	R1200CH12	1200	3370	43900	9.64×10^6	25	240	4000	60	1.353	0.064	125	0.011	W13
R3370ZD10C	N/A	1000	3370	43900	9.64×10^6	15	240	4000	60	1.353	0.064	125	0.011	W46
R3370ZD10D	N/A	1000	3370	43900	9.64×10^6	20	240	4000	60	1.353	0.064	125	0.011	W46
R3370ZD10E	N/A	1000	3370	43900	9.64×10^6	25	240	4000	60	1.353	0.064	125	0.011	W46
R3370ZD12C	N/A	1200	3370	43900	9.64×10^6	15	240	4000	60	1.353	0.064	125	0.011	W46
R3370ZD12D	N/A	1200	3370	43900	9.64×10^6	20	240	4000	60	1.353	0.064	125	0.011	W46
R3370ZD12E	N/A	1200	3370	43900	9.64×10^6	25	240	4000	60	1.353	0.064	125	0.011	W46
R3559TC16K	R1966CH16	1600	3559	38900	7.57×10^6	60	750	4000	60	1.173	0.155	125	0.008	W14
R3559TC16N	R1966CH16	1600	3559	38900	7.57×10^6	100	750	4000	60	1.173	0.155	125	0.008	W14
R3559TC16R	R1966CH16	1600	3559	38900	7.57×10^6	140	750	4000	60	1.173	0.155	125	0.008	W14
R3559TC16T	R1966CH16	1600	3559	38900	7.57×10^6	200	750	4000	60	1.173	0.155	125	0.008	W14
R3559TC20K	R1966CH20	2000	3559	38900	7.57×10^6	60	750	4000	60	1.173	0.155	125	0.008	W14
R3559TC20N	R1966CH20	2000	3559	38900	7.57×10^6	100	750	4000	60	1.173	0.155	125	0.008	W14
R3559TC20R	R1966CH20	2000	3559	38900	7.57×10^6	140	750	4000	60	1.173	0.155	125	0.008	W14
R3559TC20T	R1966CH20	2000	3559	38900	7.57×10^6	200	750	4000	60	1.173	0.155	125	0.008	W14

Outlines on pages 188 - 224

WESTCODE

Distributed Gate Thyristors - Capsule Types, Packages

Type		V_{DRM} /V_{RRM}	I_{TAV} T_K= 55°C	I_{TSM} 10ms ½ sine $V_R \leq 60\%$ V_{RRM}	I^2t $V_R \leq 60\%$ V_{RRM}	t_q @ 200V/µs	Typ. Reverse Recovery Charge $T_{j\,max}$, 50% Chord Q_{ra}	@ I_{TM}	@ -di/dt	V_{T0} @$T_{j\,max}$	r_T	$T_{j\,max}$	R_{thJK} 180° Sine	Fig. No.
Part No.	Old Part No	V	A	A	A^2s	µs	µC	A	A/µs	V	mΩ	°C	K/W	
R3559TD16K	R1966DH16	1600	3559	38900	7.57×10^6	60	750	4000	60	1.173	0.155	125	0.008	W19
R3559TD16N	R1966DH16	1600	3559	38900	7.57×10^6	100	750	4000	60	1.173	0.155	125	0.008	W19
R3559TD16R	R1966DH16	1600	3559	38900	7.57×10^6	140	750	4000	60	1.173	0.155	125	0.008	W19
R3559TD16T	R1966DH16	1600	3559	38900	7.57×10^6	200	750	4000	60	1.173	0.155	125	0.008	W19
R3559TD20K	R1966DH20	2000	3559	38900	7.57×10^6	60	750	4000	60	1.173	0.155	125	0.008	W19
R3559TD20N	R1966DH20	2000	3559	38900	7.57×10^6	100	750	4000	60	1.173	0.155	125	0.008	W19
R3559TD20R	R1966DH20	2000	3559	38900	7.57×10^6	140	750	4000	60	1.173	0.155	125	0.008	W19
R3559TD20T	R1966DH20	2000	3559	38900	7.57×10^6	200	750	4000	60	1.173	0.155	125	0.008	W19
R3708FC40V	R1386CH40	4000††	3708	50000	12.5×10^6	250	4000	4000	60	1.473	0.156	125	0.0065	W15
R3708FC40W	R1386CH40	4000††	3708	50000	12.5×10^6	300	4000	4000	60	1.473	0.156	125	0.0065	W15
R3708FC45V	R1386CH45	4500††	3708	50000	12.5×10^6	250	4000	4000	60	1.473	0.156	125	0.0065	W15
R3708FC45W	R1386CH45	4500††	3708	50000	12.5×10^6	300	4000	4000	60	1.473	0.156	125	0.0065	W15
R3708FD40V	N/A	4000††	3708	50000	12.5×10^6	250	4000	4000	60	1.473	0.156	125	TBC	W48
R3708FD40W	N/A	4000††	3708	50000	12.5×10^6	300	4000	4000	60	1.473	0.156	125	TBC	W48
R3708FD45V	N/A	4500††	3708	50000	12.5×10^6	250	4000	4000	60	1.473	0.156	125	TBC	W48
R3708FD45W	N/A	4500††	3708	50000	12.5×10^6	300	4000	4000	60	1.473	0.156	125	TBC	W48
RX075FC24R	N/A	2400	3814	64500	20.8×10^6	140	1800	4000	60	1.568	0.133	125	0.0065	W15
RX075FC24T	N/A	2400	3814	64500	20.8×10^6	200	1800	4000	60	1.568	0.133	125	0.0065	W15
RX075FC28R	N/A	2800	3814	64500	20.8×10^6	140	1800	4000	60	1.568	0.133	125	0.0065	W15
RX075FC28T	N/A	2800	3814	64500	20.8×10^6	200	1800	4000	60	1.568	0.133	125	0.0065	W15
RX075FD24R	N/A	2400	3814	64500	20.8×10^6	140	1800	4000	60	1.568	0.133	125	TBC	W48
RX075FD24T	N/A	2400	3814	64500	20.8×10^6	200	1800	4000	60	1.568	0.133	125	TBC	W48
RX075FD28R	N/A	2800	3814	64500	20.8×10^6	140	1800	4000	60	1.568	0.133	125	TBC	W48
RX075FD28T	N/A	2800	3814	64500	20.8×10^6	200	1800	4000	60	1.568	0.133	125	TBC	W48

NB: †† - V_{rrm} 3000V max

Under development

Fig. W9
Weight 90 g

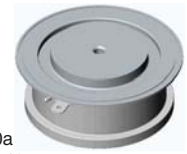

Fig. W10a
Weight 340 g

Fig. W11
Weight 510 g

Fig. W11a
Weight 510 g

Fig. W13
Weight 1700 g

Fig. W14
Weight 1300 g

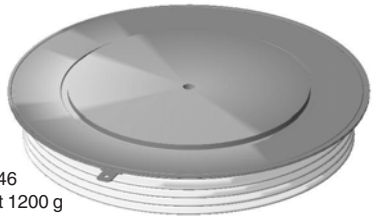

Fig. W46
Weight 1200 g

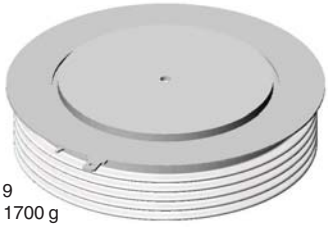

Fig. W19
Weight 1700 g

Fig. W15
Weight 2800 g

Fig. W48
Weight 1000 g

Outlines on pages 188 - 224

WESTCODE

We offer a broad range of high specification devices incorporating advanced features such as buffer layer, fine pattern and transparent emitter technologies.

Offering both symmetrical devices for applications with a reverse blocking requirement e.g. current sourced inverters and anode shorted devices for applications where no reverse blocking requirement exists e.g. voltage sourced inverters.

Devices with voltage ratings to 6kV (3.8kV DC link) and controllable current ratings of up to 4kA are available to meet the toughest demands in applications such as traction propulsion and auxiliaries, AC industrial drives, FACTs and active VAr controllers.

Gate Turn-Off Thyristors are still the component of choice when it comes to very high power converters and we remain totally committed to this technology for the foreseeable future.

Gate Turn-Off Thyristors - Capsule Types

Type		V_{DRM} V_{GK}= -2V	V_{RRM}	I_{TGQM} @ C_S		I_{TAV} T_K= 55°C	I_{TSM} 10ms ½ sine $V_R \leq 10V$	I^2t $V_R \leq 10V$	Typ. Switching Times		V_T I_T= I_{TGQM}	$T_{j\ max}$	R_{thJK} 180° Sine	Fig. No.
Part No.	Old Part No.	V	V	A	µF	A	kA	A^2s	t_{gt} µs	t_{gq} µs	V	°C	K/W	
S0500KC200	N/A	2000	2000	500	1.0	330	4.0	80×10^3	3.5	10	2.5	125	0.065	W34
S0500KC20Y	N/A	2000	100	500	1.0	330	4.0	80×10^3	3.5	10	2.5	125	0.065	W34
S0500KC25D	N/A	2500	2000	500	1.0	330	4.0	80×10^3	3.5	10	2.5	125	0.065	W34
S0500KC25Y	N/A	2500	100	500	1.0	330	4.0	80×10^3	3.5	10	2.5	125	0.065	W34
S0700KC140	N/A	1400	1400	700	1.5	430	5.0	125×10^3	3.0	10	2.2	125	0.065	W34
S0700KC14Y	N/A	1400	100	700	1.5	430	5.0	125×10^3	3.0	10	2.2	125	0.065	W34
S0700KC17D	N/A	1700	1400	700	1.5	430	5.0	125×10^3	3.0	10	2.2	125	0.065	W34
S0700KC17Y	N/A	1700	100	700	1.5	430	5.0	125×10^3	3.0	10	2.2	125	0.065	W34
S1200NC200	N/A	2000	2000	1200	3.0	790	13.0	840×10^3	4.5	19	2.7	125	0.027	W36
S1200NC20Y	N/A	2000	100	1200	3.0	790	13.0	840×10^3	4.5	19	2.7	125	0.027	W36
S1200NC25D	N/A	2500	2000	1200	3.0	790	13.0	840×10^3	4.5	19	2.7	125	0.027	W36
S1200NC25Y	N/A	2500	100	1200	3.0	790	13.0	840×10^3	4.5	19	2.7	125	0.027	W36
H0500KC200	N/A	2500	2000	500	1.0	280	3.0	45×10^3	2.0	5	3.2	125	0.065	W34
H0500KC20Y	N/A	2500	100	500	1.0	280	3.0	45×10^3	2.0	5	3.2	125	0.065	W34
H0500KC25D	N/A	2500	2000	500	1.0	280	3.0	45×10^3	2.0	5	3.2	125	0.065	W34
H0500KC25Y	N/A	2500	100	500	1.0	280	3.0	45×10^3	2.0	5	3.2	125	0.065	W34
H0700KC140	N/A	1400	1400	700	1.5	360	4.0	80×10^3	3.0	5	2.75	125	0.065	W34
H0700KC14Y	N/A	1400	100	700	1.5	360	4.0	80×10^3	3.0	5	2.75	125	0.065	W34
H0700KC17D	N/A	1700	1400	700	1.5	360	4.0	80×10^3	3.0	5	2.75	125	0.065	W34
H0700KC17Y	N/A	1700	100	700	1.5	360	4.0	80×10^3	3.0	5	2.75	125	0.065	W34
H1200NC200	N/A	2000	2000	1200	3.0	670	10.5	550×10^3	3.0	12	3.3	125	0.027	W36
H1200NC20Y	N/A	2000	100	1200	3.0	670	10.5	550×10^3	3.0	12	3.3	125	0.027	W36
H1200NC25D	N/A	2500	2000	1200	3.0	670	10.5	550×10^3	3.0	12	3.3	125	0.027	W36
H1200NC25Y	N/A	2500	100	1200	3.0	670	10.5	550×10^3	3.0	12	3.3	125	0.027	W36
GX152QC450	N/A	4500	18	1000	1.0	Product under development						125		W35
GX185QC250	N/A	2500	18	1000	1.0	Product under development						125		W35
G1000NC450	N/A	4500	18	1000	2.0	545	8.0	320×10^3	4.5	14	4.0	125	0.027	W36
G2000VC250	WG20025SN	2500	18	2000	4.0	1020	16.0	1.28×10^6	5.0	24	2.8	125	0.022	W31
G2000VC450	WG20045SN	4500	18	2000	4.0	870	13.0	845×10^3	8.0	25	3.5	125	0.022	W31
G3000TC250	WG30025SN	2500	18	3000	5.0	1640	30.0	4.50×10^6	3.0	25	2.5	125	0.015	W32
G3000TC450	WG30045SN	4500	18	3000	6.0	1180	24.0	2.88×10^6	9.0	28	4.0	125	0.015	W32
G3000TC600	WG30060SN	6000	18	3000	3.0	1100	24.0	2.88×10^6	7.5	28	3.5	110	0.015	W32
G4000EC450	WG40045SN	4500	18	4000	6.0	1270	25.0	3.13×10^6	7.5	28	4.4	125	0.014	W33

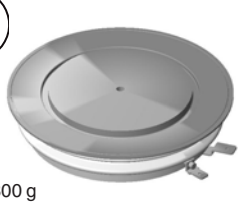

Fig. W31
Weight 800 g

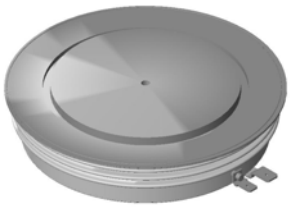

Fig. W32
Weight 1500 g

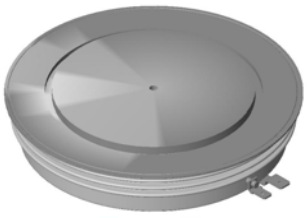

Fig. W33
Weight 1500 g

Under development

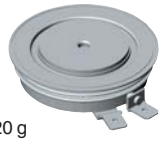

Fig. W34
Weight 120 g

Fig. W35
Weight approx 300 g
Product in development

Fig. W36
Weight 500 g

Outlines on pages 188 - 224

Pulse Thyristors

WESTCODE

We have long since been at the forefront of solid state pulsed power technology, offering custom solutions to complex pulsed power problems. Pulse thyristors are, in essence, optimised Gate Turn-Off thyristors and as such we are able to offer a flexible range of parts depending upon customer needs.

Devices with voltage ratings to 6kV (3.8kV DC link), pulsed currents to 150kA peak and di/dt capabilities to over 30kA/µs are available.

A selection of preferred parts is shown here, for other parts and technical support please contact the Westcode factory.

Pulse Thyristors - Capsule Types

Type		V_{DRM} V_{GK}= -2V	V_{RRM}	V_{DC} V_{GK}= -2V	I_{PULSE}	di/dt_{cr}	V_{T0} @$T_{j\ max}$	r_T @$T_{j\ max}$	$T_{j\ max}$	R_{thJK} d.c. 180° sine	Fig. No.
Part No.	Old Part No.	V	V	V	kA	kA/µs	V	mΩ	°C	K/W	
Y2002KC250	N/A	2500	2000	1500	20	5	1.216	2.196	125	0.065	W34
Y5002NC250	N/A	2500	2000	1500	50	11	1.755	1.122	125	0.027	W36
Y8002VC450	N/A	4500	17	2200	80	15	1.800	0.850	125	0.022	W31

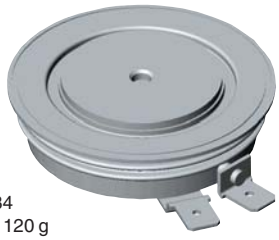

Fig. W34
Weight 120 g

Fig. W36
Weight 500 g

Fig. W31
Weight 800 g

Outlines on page 188 - 224

WESTCODE

As a pioneer of Press-Pack IGBT technology, we are able to offer a range of class leading devices with voltage ratings of 2.5kV (1.25kV DC link) and 4.5kV (2.8kV DC link).

The construction of these devices is totally free from wire and solder bonds which all but eliminates the problems of mechanical fatigue associated with conventional modules. Internal stray inductance in both the gate connections and emitter connections is vastly reduced when compared to conventional modules leading to improved ruggedness and short circuit behaviour, which is further enhanced by direct cooling of the emitter side of the chip.

These devices are based on a state-of-the-art soft punch through (SPT) process, which yields exceptional values $V_{CE(sat)}$ and quiet switching behaviour despite the high voltage ratings, yet the devices feature a positive temperature coefficient making them suitable for reliable parallel operation.

Devices are available with or without integral anti-parallel diode – a range of complementary High Power Sonic-FRDs™ optimised for use with these IGBTs are available, please contact your representative for further details.

The press pack construction offers several advantages over conventional IGBT modules.

- They exhibit exceptional power cycling performance – typically an order of magnitude better than modules – making them highly suited to applications such as induction heating and mass transits where there are repeated cyclic power demands.
- They are explosion rated making them a good choice in critical applications such as mining, the petro-chemical industry, and transportation applications.
- They have a stable short circuit failure mode which, as well as safety benefits, makes them an ideal choice for medium and high voltage applications where series connection is required. Press-pack construction is the obvious choice where series connection is needed and the short circuit failure mode allows for the design in of n+1 redundancy. Typical examples include HVDC, active VAr controllers and medium voltage drives.
- They are largely backwardly compatible with standard 2.5kV and 4.5kV Gate Turn-Off thyristors (including GCTs) in many applications such as AC drives. This makes these parts a simple and economical path to upgrade or refurbish equipment that previously used Gate Turn-Off thyristors, such as locomotives or medium voltage drives.
- They are suitable for all cooling options including direct liquid immersion.
- Applications include Medium Voltage drives, traction (main drives and auxilliaries), Utilities (HVDC and Active VAr controllers), motor control, pulsed power and induction heating power supplies. Press-pack IGBTs are particularly suited to Safety critical applications for the mining and petrochemical industries.
- Complementary gate drives, mounting clamps and passive components are available.

Press-Pack IGBTs - Capsule Types

Type	V_{CES}	I_C	I_{CM}	$V_{CE(sat)}$	IGBT Switching Typical		V_F	Diode Recovery Typical			$T_{j\ max}$	R_{thJK}		Fig. No.
				$I_C=I_C$	E_{ON}	E_{OFF}	$I_F=I_C$	I_{rm}	t_{rr}	Q_r		IGBT	Diode	
Part No.	V	A	A	V	J	J	V	A	µs	µC	°C	K/W	K/W	
T0160NA45A	4500	160	310	4.6	0.50	0.42	3.6	400	0.96	340	125	0.058	0.095	W40
T0240NA45E	4500	240	400	4.7	0.73	0.88	N/A	N/A	N/A	N/A	125	0.042	N/A	W40
T0360NA25A	2500	360	720	3.6	0.75	0.34	2.5	250	0.93	285	125	0.054	0.087	W40
T0500NA25E	2500	500	1000	3.6	0.80	0.50	N/A	N/A	N/A	N/A	125	0.039	N/A	W40
T0600TA45A	4500	600	1000	4.7	1.75	1.50	3.6	1400	0.92	650	125	0.016	0.039	W41
T0800TA45E	4500	800	1500	4.6	2.20	1.92	3.6	N/A	N/A	N/A	125	0.012	N/A	W41
T0900EA45A	4500	900	1500	4.6	2.80	2.60	3.6	1800	0.85	800	125	0.014	0.026	W44
T1200TA25A	2500	1200	2400	3.6	2.50	1.40	2.5	670	1.50	830	125	0.017	0.029	W41
T1200EA45E	4500	1200	2100	4.6	3.20	3.80	3.6	N/A	N/A	N/A	125	0.010	N/A	W44
T1500TA25E	2500	1500	3000	3.6	3.30	1.70	N/A	N/A	N/A	N/A	125	0.013	N/A	W41
T1800GA45A	4500	1800	3000	4.7	TBC	TBC	3.6	TBC	TBC	TBC	125	0.008	0.014	W45
T2400GA45E	4500	2400	4200	4.7	TBC	TBC	3.6	TBC	TBC	TBC	125	0.005	N/A	W45
TX168NA17A	1700	Products under development												W40
TX167NA17E	1700													W40
TX115TA17A	1700													W41
TX116TA17E	1700													W41

Under development

Outlines on pages 188 - 224

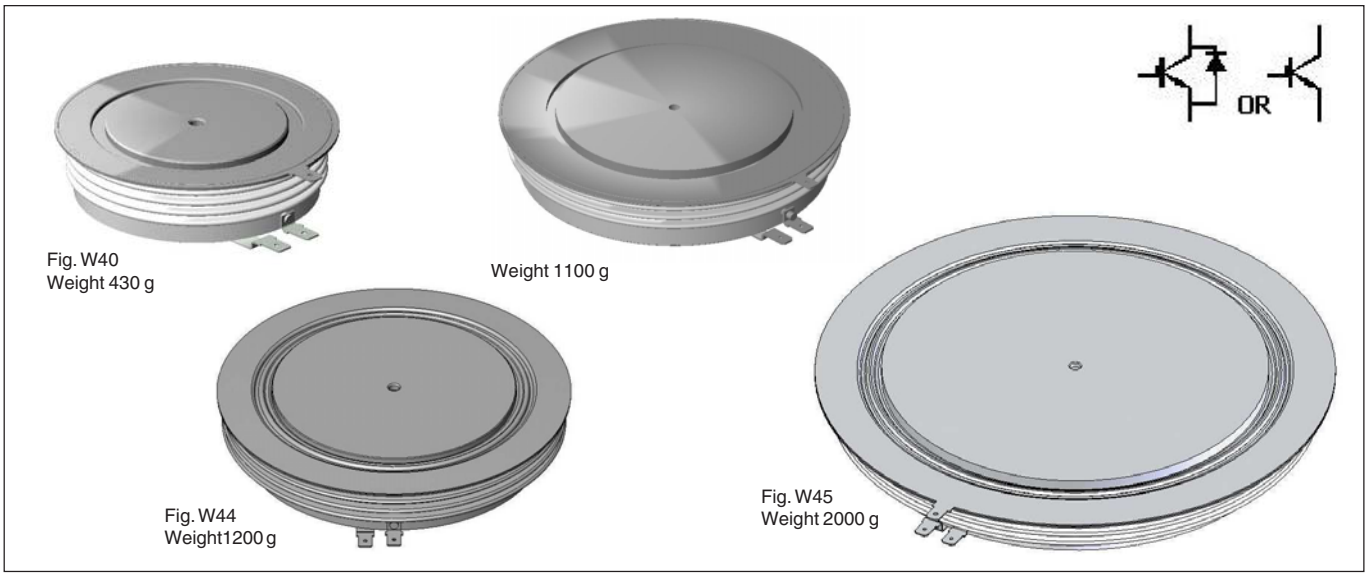

High Voltage IGBT Gate Drive Units – C0030BG400

The C0030BG400 is a single channel 30A peak rated gate drive unit (GDU), suitable for low and high side applications with DC link voltages of up to 3.5kV (5kV available on request) and with dv/dt immunity of over 100kV/µs.

This GDU performs all of the necessary supervisory functions including under voltage lockout and SCSOA protection with user configurable response and feedback. The unit requires a simple 15V DC power supply and features fibre optic command and feedback signals.

Type of IGBT	$R_{g(on)}$ W	$R_{g(off)}$ W	GDU part
T0360NA25A	33	15	C0030BG400SAA
T0500NA25E	22	15	C0030BG400SAB
T1200TA25A	12	6.8	C0030BG400SAC
T1500TA25E	10	6.8	C0030BG400SAD
T0160NA45A	15	8.2	C0030BG400SAK
T0240NA45E	10	8.2	C0030BG400SAL
T0600TA45A	5.6	3.3	C0030BG400SAM
T0800TA45E	4.7	3.3	C0030BG400SAN
T0900EA45A	3.9	2.7	C0030BG400SAP
T1200EA45E	3.3	2.2	C0030BG400SAR

This GDU is capable of driving virtually all IGBTs including our range of press-pack devices at frequencies from DC up to 20kHz with no duty cycle limitations.

Options include standard variants set up for use with each of Westcode's range of IGBTs (see table) and the core module for integration into end user PCBs. Additionally our application engineers can develop semi-custom solutions based around the standard core module.

Features

- 30A peak drive current (500ns rise time)
- 10kV AC rms isolation test
- Partial discharge free up to 4kV AC rms
- 100kV/µs dv/dt immunity
- Temperature range –40°C up to +70°C (–55°C up to +80°C available)
- ±15V gate drive voltage
- Standard HP Versatile Link™ Fibre Optic links
- Status feedback signal
- User configurable SCSOA protection

The launch of this new complementary product demonstrates our continued commitment to provide our customers with complete solutions for power electronics and further strengthens our assemblies' capability. This GDU also provides our customers with a rapid route to prototype with our range of high voltage press-pack IGBTs without having to solve the additional problems associated with high isolation voltage gate drives.

Outlines on pages 188 - 224

Power Semiconductor Assemblies from IXYS and Westcode

WESTCODE

Power Semiconductor Assemblies

From discrete devices to complete assemblies, our customers can procure our products in whatever form suits their needs on a global basis. Supply management is critical to every manufacturer and reducing costs without compromising quality is essential. Our experienced, international, team of engineers is on hand to help our customers to get more from their products and keep at the forefront of technology in an increasingly competitive marketplace.

Standard Assemblies

We have a comprehensive range of standard assemblies for all of the common converter topologies utilising either natural air, forced air or liquid cooling. These well-proven designs provide an economical alternative to in house design and assembly of discrete parts. These assemblies are available on short lead-times to suit most common line voltages and current ratings from 35A to 15kA.

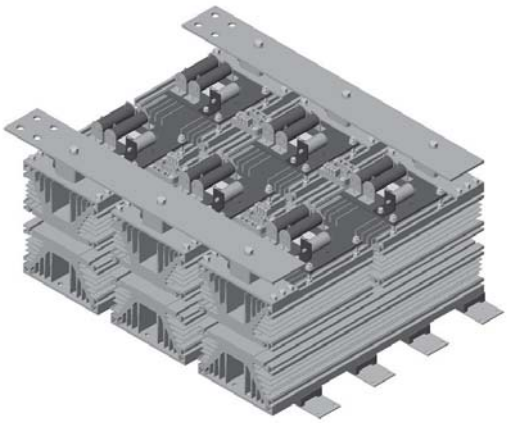

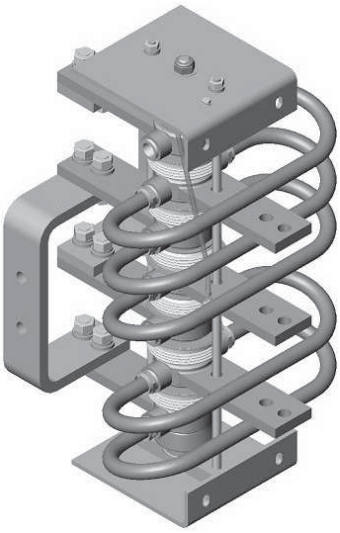

Custom Assemblies

With over 70 years of experience in power circuit design and manufacture, our dedicated team of design engineers can deliver customs solutions for a whole range of design problems ranging from simple crowbar applications to complicated multi-megawatt power converters. Utilising the latest 3D modeling techniques, we can reduce the cycle time from concept to manufacture and ensure successful system level integration into our customers equipment.

Pulsed Power

As a pioneer in the development of solid state pulsed power components and systems, we able to deliver anything from discrete components to fully integrated energy transfer switches. With systems successfully delivering voltage ratings of over 50kV and pulsed currents to 140kA, we have wealth of experience to put at your disposal. Our modular design solutions based on either pulse thyristor or press-pack IGBT technology and integrating control and protection functions provide you with a flexible “black box” approach to energy transfer problems.

We are involved with pulsed power on global basis, working with prestigious research organisations such as CERN, Switzerland as well as medium volume manufacture for emerging commercial applications such as laser supplies, PUV and PEF sterilisation, magnetisation and metal forming.

We have a philosophy of working closely with our customers to ensure that we deliver the right solution in the right time and right price – first time and every time.

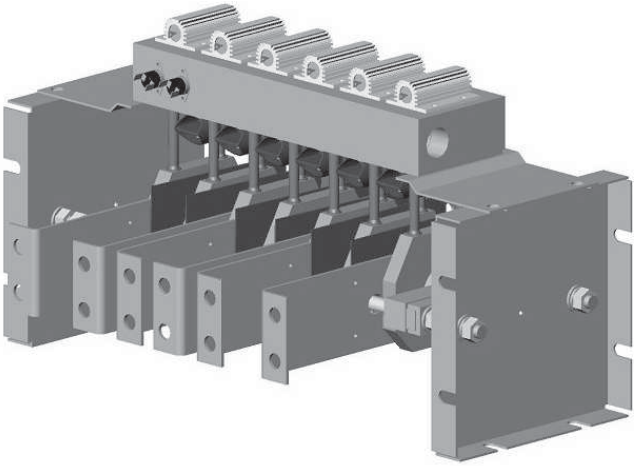

Outlines on pages 188 - 224

WESTCODE

Transportation

We have a long association with the railway industry and over the years have gained an enviable reputation within railway industry as a solution provider. Using our experience and wide ranging contacts within the industry, we are able to offer assistance in tackling issues such as component obsolescence, improving power equipment reliability, contract maintenance of power modules, refurbishment of power electronics and upgrades to existing systems.

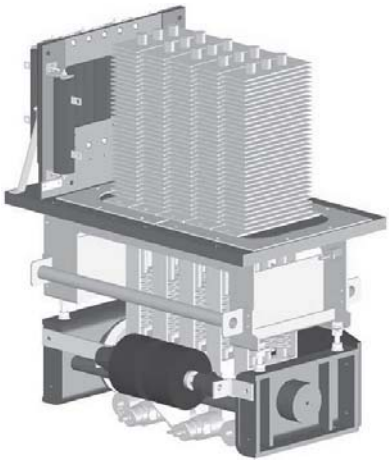

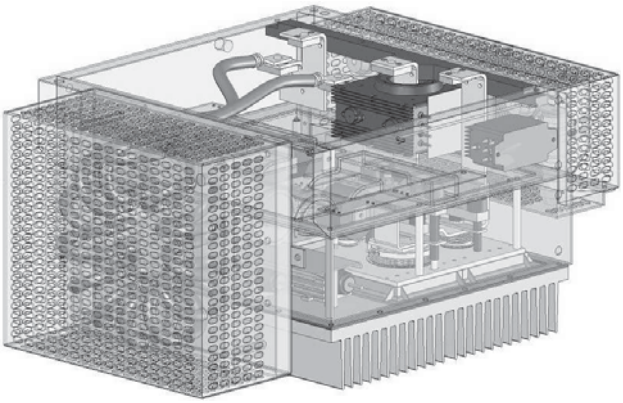

Working systematically to the highest international standards, we can give your equipment a new lease of life and help protect your investment in these valuable assets. For larger projects, such as fleet wide re-fits, we are able to work within a consortium of specialist companies to ensure that you have the right skills to hand to deliver a turnkey solution to your requirements.

Silicon Assemblies

A wide range of units is available, incorporating international standard outline silicon semiconductors. Westcode products have gained a worldwide reputation for quality in military, industrial and domestic applications.

Standard extruded aluminium heatsink profiles are used for mounting discrete semiconductor devices in various configurations, for example:

- Single-phase diode bridges with current ratings from 70 to 5170 Amps DC
- Single-phase half or fully controlled bridges from 35 to 2200 Amps DC
- Three-phase diode bridges with current ratings from 100 to 7190 Amps DC
- Three-phase half or fully controlled bridges from 45 to 3790 Amps DC
- Hexaphase single way diode assemblies from 200 to 14380 Amps DC
- Hexaphase single way Thyristor assemblies from 90 to 7580 Amps DC
- AC Regulators, single and three phase, from 40 to 2940 Amps RMS

Water Cooled AC Regulators

Included in our standard range are solid state, water cooled AC Regulators for resistance welding, with ratings from 315 to 3020 Amps RMS.

Also available are water cooled, single and three phase assemblies from 1200 to 6000 Amps DC.

All the above range is suitable for 440 VRMS 50Hz mains operation.

Beyond Semiconductors

Our flexible manufacturing facility is able to readily adapt to our customers needs. In additional to power semiconductor assembly, we can offer complementary sub-assemblies to our customer's requirements, such as fuse panels and capacitor banks as well as contract manufacture to your designs.

Application and Engineering Support

Our highly experienced technical team is on hand to provide our customers with first class support for everything from the application of our range of discrete devices to the design and development of complex systems. We can help you from concept through design to manufacture and test, working closely with you at every step of the way.

Components

We offer a full portfolio of components which are complementary to our range of power semiconductors including:

Heatsinks Coolers Mounting Clamps
Ultra Rapid Semiconductor Protection Fuses
Capacitors for Power Electronics
Gate Drive Units

Outlines on pages 188 - 224

Westack - *Modular Solutions*

WESTCODE

A standard assembly module provides the basic building block for this new range of assemblies.

Assembly modules can incorporate either single of dual devices and allow for the building of; single-phase diode and thyristor bridges, 3-phase diode and thyristor bridges, or 6-phase single way diode and thyristor assemblies.

A custom built assembly can be provided when a standard solution is not suitable.

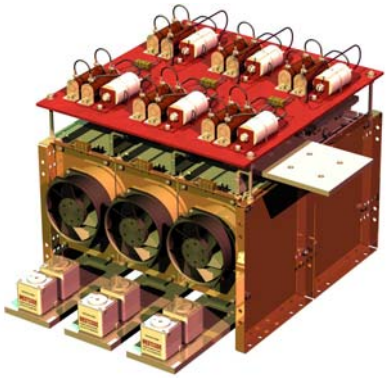

Westack - *Modular Solutions*

Single phase diode bridges — Approx. total loss $2xI_{DC}$ @ 25°C

Assembly Part Number	I_{DC} amps Air Forced 2.5m/s T_a 25°C	T_a 35°C	T_a 45°C	I_{FSM} amps / I_{TSM} amps	I^2t A^2s	Dimensions mm Fig.	W	H	D	Mass kg	Device Type and Quantity	Heat Sink Type
SXB1375B	1375	1303	1230	19500	$1.9x10^6$	1	382	325	405	20	W2058LC (4)	B(2x83,1x180)
SXB2096B	2096	1987	1874	33000	$5.45x10^6$	1	382	325	405	20	W3270NC (4)	B(2x83,1x180)
SXB3442B	3442	3277	3109	53000	$13.5x10^6$	2	382	593	405	40	W5696VC (4)	B(2x180)
SXB4264B	4264	4051	3835	72000	$22.5x10^6$	2	382	593	405	40	W8405ZC (4)	B(2x180)

Three phase diode bridges — Approx. total loss $2.5xI_{DC}$ @ 25°C

Assembly Part Number	I_{DC} amps Air Forced 2.5m/s T_a 25°C	T_a 35°C	T_a 45°C	I_{FSM} amps / I_{TSM} amps	I^2t A^2s	Dimensions mm Fig.	W	H	D	Mass kg	Device Type and Quantity	Heat Sink Type
SXB1920G	1920	1822	1721	19500	$1.9x10^6$	3	548	325	405	30	W2058LC (6)	B(2x83,1x180)
SXB2939G	2939	2788	2634	33000	$5.45x10^6$	3	548	325	405	30	W3270NC (6)	B(2x83,1x180)
SXB4869G	4869	4640	4407	53000	$13.5x10^6$	4	548	593	405	60	W5696VC (6)	B(2x180)
SXB5993G	5993	5701	5402	72000	$22.5x10^6$	4	548	593	405	60	W8405ZC (6)	B(2x180)

Six phase diode, single way with IPT — Approx. total loss $1.25xI_{DC}$ @ 25°C

Assembly Part Number	I_{DC} amps Air Forced 2.5m/s T_a 25°C	T_a 35°C	T_a 45°C	I_{FSM} amps / I_{TSM} amps	I^2t A^2s	Dimensions mm Fig.	W	H	D	Mass kg	Device Type and Quantity	Heat Sink Type
SXB3840HEX	3840	3644	3442	19500	$1.9x10^6$	5	548	325	395	30	W2058LC (6)	B(2x83,1x180)
SXB5877HEX	5877	5576	5268	33000	$5.45x10^6$	5	548	325	395	30	W3270NC (6)	B(2x83,1x180)
SXB9737HEX	9737	9281	8813	53000	$13.5x10^6$	6	548	593	395	60	W5696VC (6)	B(2x180)
SXB11987HEX	11987	11401	10804	72000	$22.5x10^6$	6	548	593	395	60	W8405ZC (6)	B(2x180)

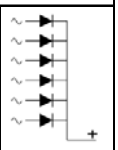

Six phase thyristor, single way with IPT — Approx. total loss $1.5xI_{DC}$ @ 25°C

Assembly Part Number	I_{DC} amps Air Forced 2.5m/s T_a 25°C	T_a 35°C	T_a 45°C	I_{FSM} amps / I_{TSM} amps	I^2t A^2s	Dimensions mm Fig.	W	H	D	Mass kg	Device Type and Quantity	Heat Sink Type
SXB2428HEXT	2428	2233	2030	15000	$1.13x10^6$	5	548	325	395	30	N1265LS (6)	B(2x83,1x180)
SXB3529HEXT	3529	3244	2949	29600	$4.38x10^6$	5	548	325	395	30	N1802NS (6)	B(2x83,1x180)
SXB4649HEXT	4649	4270	3878	37000	$6.85x10^6$	6	548	593	395	60	N2500VC (6)	B(2x180)
SXB6240HEXT	6240	5714	5173	64000	$20.5x10^6$	6	548	593	395	60	N4085ZC (6)	B(2x180)

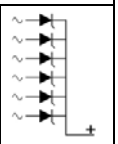

Single phase fully controlled bridges — Approx. total loss $2.5xI_{DC}$ @ 25°C

Assembly Part Number	I_{DC} amps Air Forced 2.5m/s T_a 25°C	T_a 35°C	T_a 45°C	I_{FSM} amps / I_{TSM} amps	I^2t A^2s	Dimensions mm Fig.	W	H	D	Mass kg	Device Type and Quantity	Heat Sink Type
SXB868FB	868	797	724	15000	$1.13x10^6$	1	382	325	405	20	N1265LS (4)	B(2x83,1x180)
SXB1265FB	1265	1161	1054	29600	$4.38x10^6$	1	382	325	405	20	N1802NS (4)	B(2x83,1x180)
SXB1645FB	1645	1508	1367	37000	$6.85x10^6$	2	382	593	405	40	N2500VC (4)	B(2x180)
SXB2167FB	2167	1981	1790	64000	$20.5x10^6$	2	382	593	405	40	N4085ZC (4)	B(2x180)

Three phase fully controlled bridges — Approx. total loss $3xI_{DC}$ @ 25°C

Assembly Part Number	I_{DC} amps Air Forced 2.5m/s T_a 25°C	T_a 35°C	T_a 45°C	I_{FSM} amps / I_{TSM} amps	I^2t A^2s	Dimensions mm Fig.	W	H	D	Mass kg	Device Type and Quantity	Heat Sink Type
SXB1214FG	1214	1116	1015	15000	$1.13x10^6$	3	548	325	405	30	N1265LS (6)	B(2x83,1x180)
SXB1764FG	1764	1622	1475	29600	$4.38x10^6$	3	548	325	405	30	N1802NS (6)	B(2x83,1x180)
SXB2324FG	2324	2135	1939	37000	$6.85x10^6$	4	548	593	405	60	N2500VC (6)	B(2x180)
SXB3120FG	3120	2857	2586	64000	$20.5x10^6$	4	548	593	405	60	N4085ZC (6)	B(2x180)

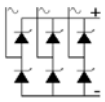

Outlines on pages 188 - 224

Cooling for each module section is provided by the use of a low noise 115/230V ac fan which is protected against overloading by an integral thermal cut-out.

Surge suppression and fusing provides reliable and safe operation. Surge suppression (protecting the devices from voltage transients) and high speed fuses (to protect against short circuit) are available. Contact Westcode for details.

All plastic components are UL recognised and meet the requirements of the European Union Directive 2002/95/EC covering the restricted use of certain hazardous substances in electrical and electronic equipment.

ISO 9000 2000 provides the standard against which all our products and services are measured.

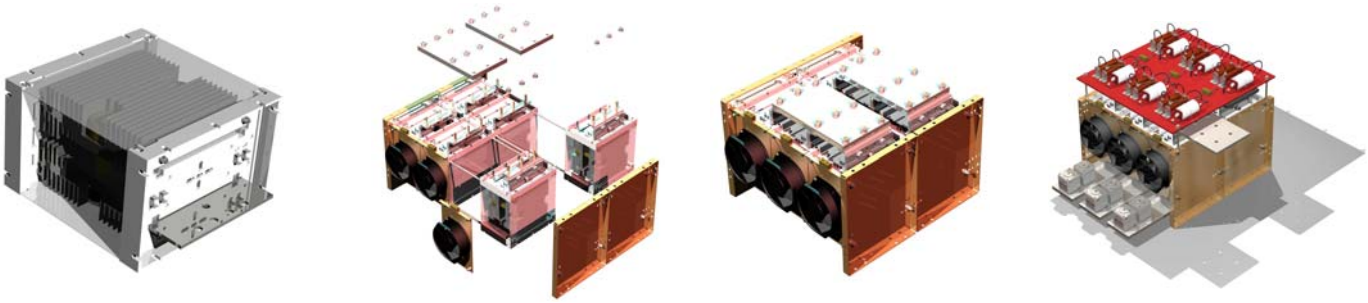

Westack - ***Modular Solutions are available in 6 standard configurations, others by request.***

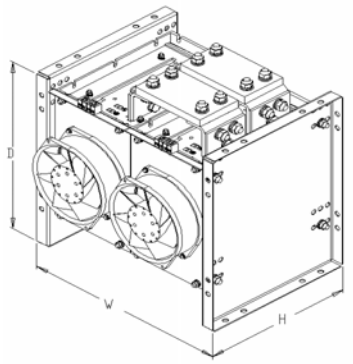

Figure 1
Weight 20 kg

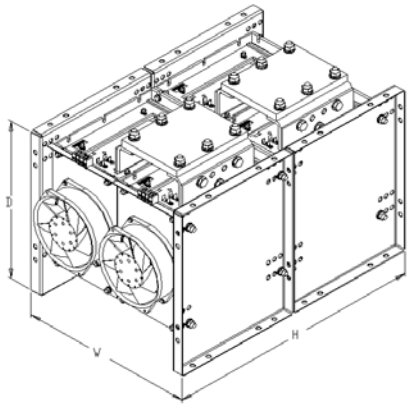

Figure 2
Weight 40 kg

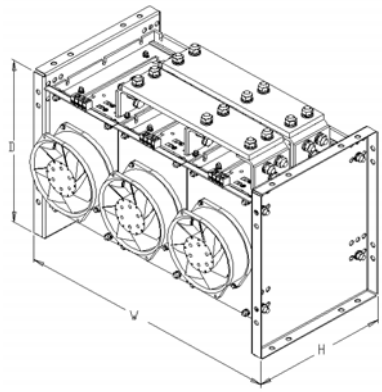

Figure 3
Weight 30 kg

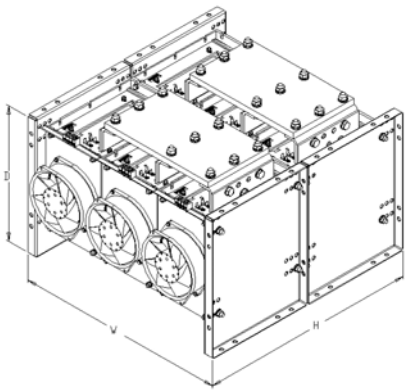

Figure 4
Weight 60 kg

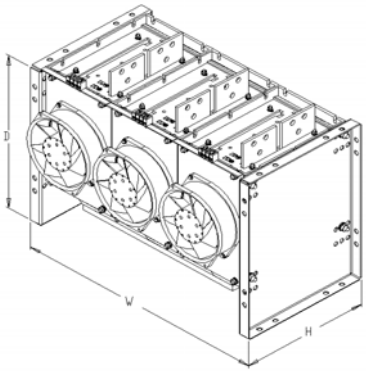

Figure 5
Weight 30 kg

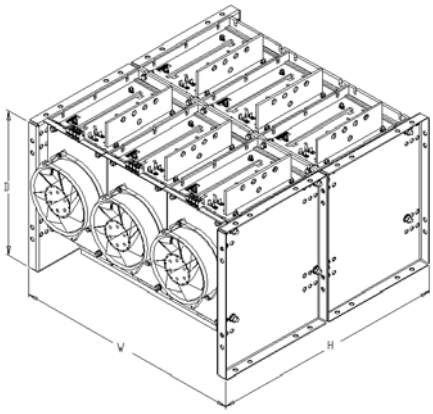

Figure 6
Weight 60 kg

Outlines on pages 188 - 224

Capsule Mounting Clamps

The "Bar" type clamp uses a two rod system with a straight bar spring that is bent over a central point to give the clamping force on the device. This force is achieved when the indicators, metal shims at each end of the clamp, become just trapped. (CMK 9000 uses a disc spring stack).

The "Box" type clamp uses a four bolt system with disc springs and the correct force on the device is achieved when the bottom of the box just touches the heatsink.

As the force indication is contained within these clamps, special equipment or torque spanners are not required. The clamps can therefore be reset to the correct force at any time, using only a box spanner.

Box clamps are suitable for devices with 19mm, 25mm or 34mm diameter mounting surfaces and of 13.8mm, 14.6 or 26.2mm nominal thicknesses respectively.

Bar clamps are suitable for devices with 19mm to 125mm diameter mounting surfaces ad 450kgf to 9000kgf clamping forces.

Bar Type	Fixing Centres mm	Rod Size	Capsule Device		
			Outline	Mounting Surface Diameter mm	Nominal Thickness mm
CMK450S56M CMK450D56M CMK450DT56M	65	M8	DO-200AA/TO-200AB	19.0	13.8
CMK550S56M CMK550D56M	65	M8	GTO	29.5	16.0
CMK900S56M CMK900D56M CMK900DT56M	65	M8	Diode/Thyristor	25.1	14.6
CMK0600S74M CMK0600D74M	89	M10	Press-Pack IGBTs	47.0	27.0
CMK1000S74M CMK1000D74M	89	M10	Press-Pack IGBTs	47.0	27.0
CMK1100D76M	89	M10	DO-200AB/TO-200AC	34.0	26.2
CMK1130S76M CMK1130D76M CMK1130DT76M	89	M10	DO-200AB/TO-200AC	34.0	26.2
CMK1800S76M CMK1800D76M CMK1800DT76M	89	M10	Wespack PCT	38.0	14.0
CMK2100S76M* CMK2100D76M*	89	M10	GTO	47.0	27.0
CMK2140S76M* CMK2140D76M* CMK2140DT76M*	89	M10	DO-200/Thyristor	47.0	26.8
CMK2700S76M CMK2700D76M CMK2700DT76M	89	M10	Wespack PCT	50.0	14.0

Bar Type	Fixing Centres mm	Rod Size	Capsule Device		
			Outline	Mounting Surface Diameter mm	Nominal Thickness mm
CMK2000S114M CMK2000D114M	132	M12	Press-Pack IGBTs	75.0	26.0
CMK2500S114M CMK2500D114M	132	M12	Press-Pack IGBTs	75.0	26.0
CMK2500S116M* CMK2500D116M*	132	M12	GTO	63.0	26.0
CMK3000S116M* CMK3000D116M*	132	M12	DO-200AD/Thyristor	63.0	33.0
CMK3500S116M* CMK3500D116M*	132	M12	GTO	75.0	26.0
CMK4000S116M* CMK4000D116M*	132	M12	Diode/Thyristor	73.0	36.8
CMK5000D128M*	146	M16	GTO	75.0	26.0
CMK7000D128M*	146	M16	Diode/Thyristor	75.0	26.6
CMK3060S140ML CMK3060D140ML	154	M12	Press-Pack IGBTs	85.1	26.0
CMK9000S160M* CMK9000D160M*	180	M16	Thyristor	99.3	35.8
CMK6120S180ML CMK6120D180ML	196	M16	Press-Pack IGBTs	125.0	26.0

* M for T_j up to 190°C, ML for T_j 125°C.

Note: 1Kgf = 9.8 Newtons

Outline Drawings for both Bar and Box type Clamps are available from Westcode via the website

www.westcode.com

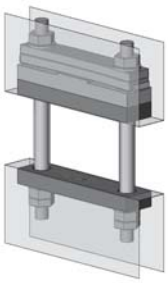

CMK	XXXX	S, D or DT	XX	M
Capsule Mounting Kit	Nominal Clamping Force Kgf	S-Single side cooled (tapped heatsink) D-Double side cooled (through hole in heatsink) DT-Double side cooled (tapped heatsink)	Maximum Capsule Diameter mm	Metric Fixings M8, 10 or 12

Box Type	Fixing Centres mm	Rod Size	Capsule Device		
			Outline	Mounting Surface Diameter mm	Nominal Thickness mm
CMK450B19M	50 PCD	M5x50 Bolts	DO-200AA/TO-200AB	19.0	13.8
CMK450B25M			Diode/Thyristor	25.1	14.6
CMK1500B34M	70 PCD	M6x50 Bolts	DO-200AB/TO-200AC	34.0	26.2

Note: 1Kgf = 9.8 Newtons

CMK	XXX	B	XX	M
Capsule Mounting Kit	Nominal Clamping Force Kgf	Box Clamp	Capsule Mounting Surface Diameter 19, 25 or 34mm	Metric Fixing Bolts (See Chart)

Outlines on pages 188 - 224

Coolers and Heatsinks

A comprehensive range of coolers and heatsinks are offered, details available upon request.

Heatsink Type Type	Weight Kg/m	Periphery mm	Area mm2
G Fin	8.1	1059	2979
GA Fin	15.6	1682	5867
H Fin	12.7	1684	4655
T Fin	20	2065	7573
TB Fin	29	2467	10905
TC Fin	28	2544	10561
LP100 Fin (40 Vane)	30	6620	11172
WS46 Fin	20	2822	7411
WS30 Copper FinDimensions 125mm x 125mm x 4 vanes			

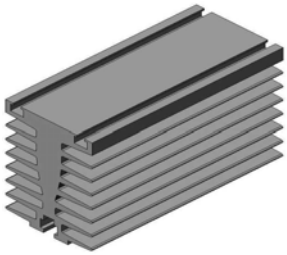

WH1 -G Fin

WH2 - GA Fin

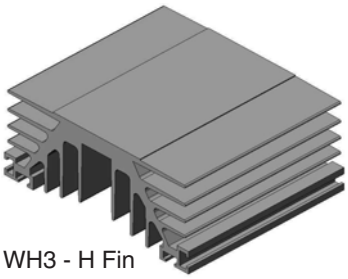

WH3 - H Fin

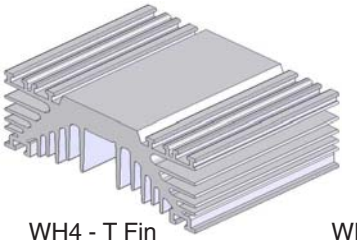

WH4 - T Fin

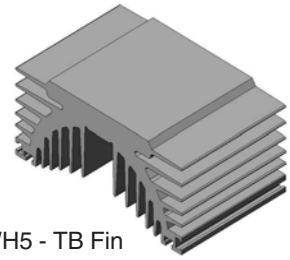

WH5 - TB Fin

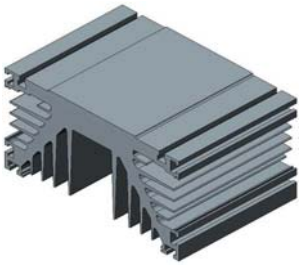

WH6 -TC Fin

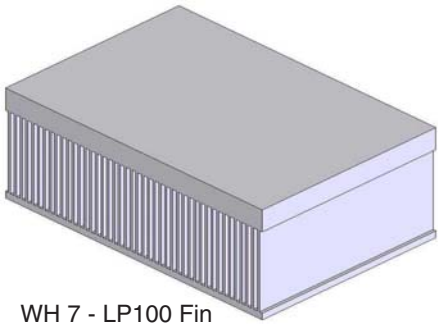

WH 7 - LP100 Fin

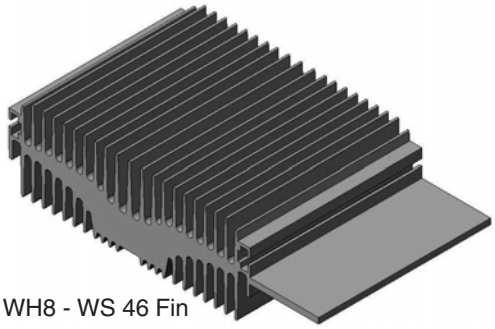

WH8 - WS 46 Fin

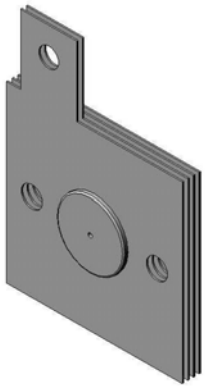

WH9 - WS 30 Copper Fin

Cooler Type	Weight kg	Cooler Thickness mm	Busbar Thickness mm
LK	0.612	16	6,4
LKA	0.418	16	n/a
LKB	1.75	20	10
LKC	1.30	20	n/a
WS27	0.375	15	n/a

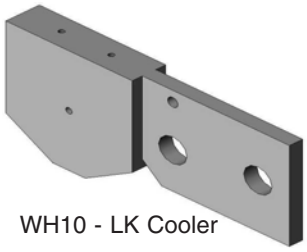

WH10 - LK Cooler

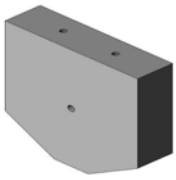

WH11 - LKA Cooler

WH14 - WS 27 Cooler

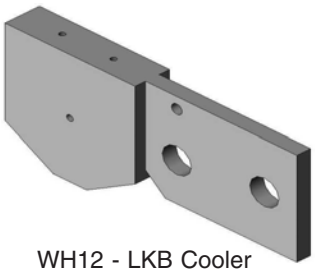

WH12 - LKB Cooler

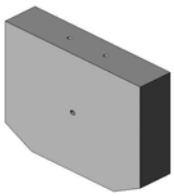

WH13 - LKC Cooler

Outlines on pages 188 - 224

Dimensions in mm and inches (1 mm = 0.0394")

D1 DE 150

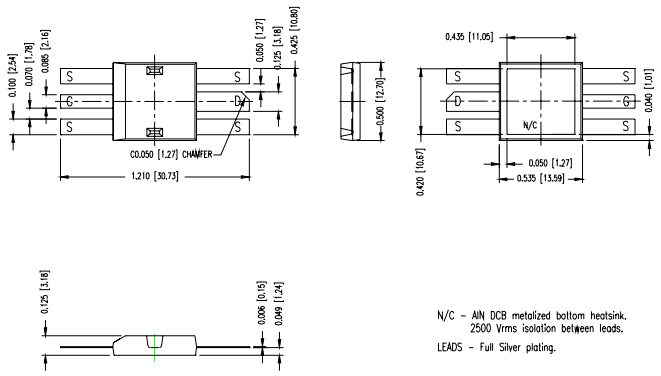

D2 DE 275

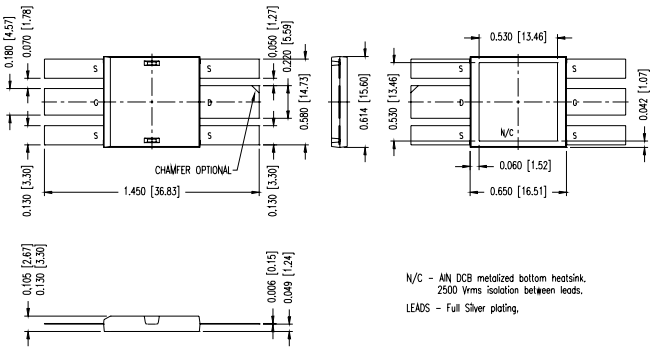

D3 DE 275x2

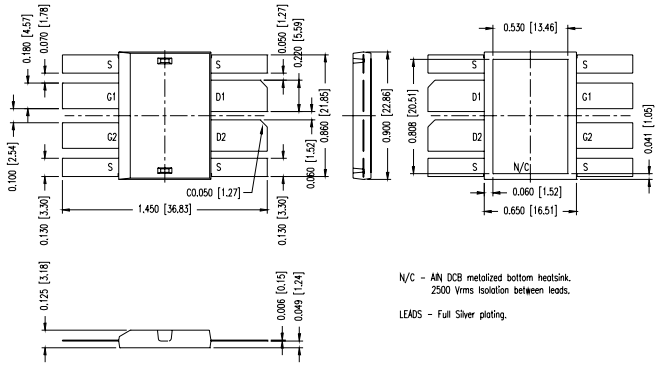

D4 DE 375

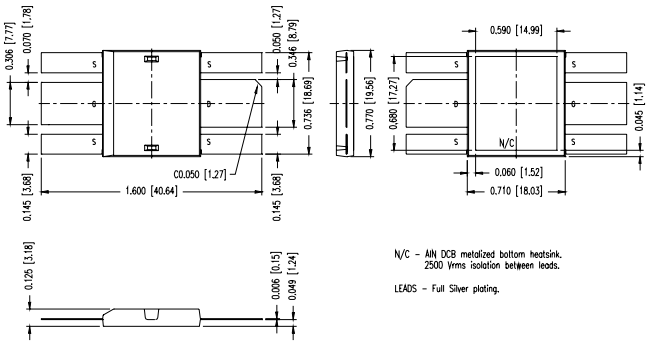

DE 475

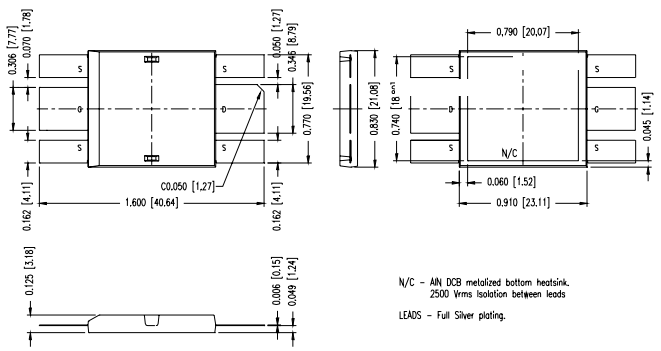

Package 754

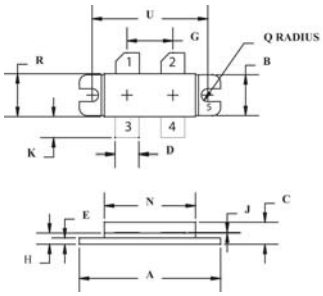

DIM	INCHES		MILIMETERS	
	MIN	MAX	MIN	MAX
A	1.330	1.350	33.79	34.21
B	0.370	0.100	9.40	10.41
C	0.190	0.230	4.83	5.84
D	0.215	0.235	5.47	5.96
E	0.050	0.070	1.27	1.77
G	0.430	0.440	10.92	11.18
H	0.102	0.112	2.59	2.84
J	0.004	0.006	0.11	0.15
K	0.185	0.215	4.83	5.33
N	0.845	0.875	21.46	22.23
Q	0.060	0.070	1.52	1.78
R	0.390	0.410	9.91	10.41
U	1.100 BSC		27.94 BSC	

DE275-IC

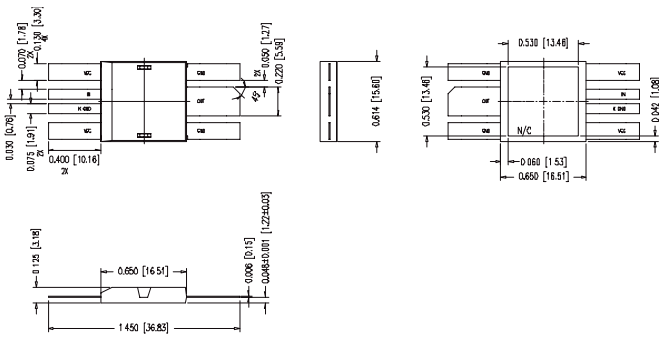

DE150-IC

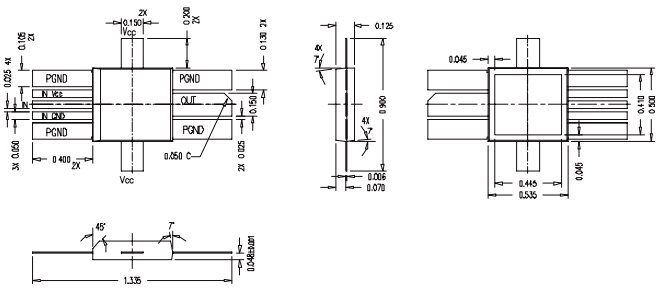

Outline drawings

Dimensions in mm and inches (1 mm = 0.0394")

Package 81

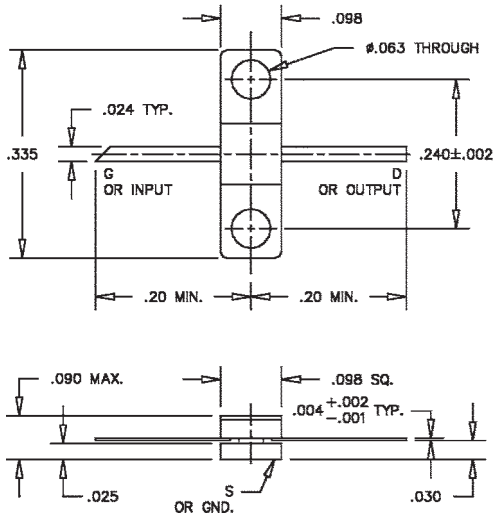

Package 82

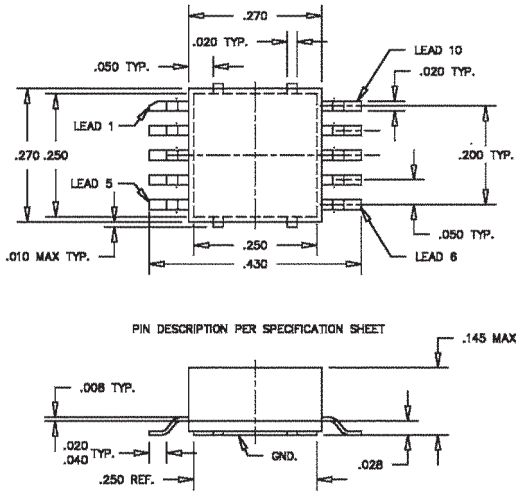

Package 83

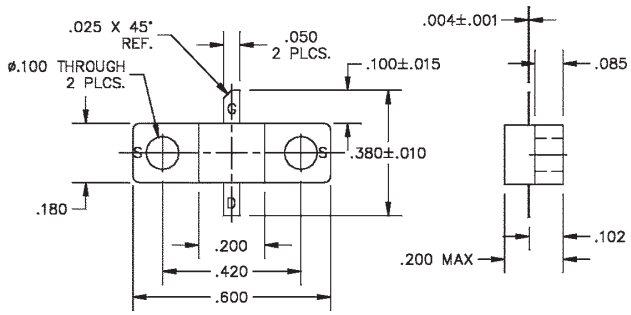

Package 84

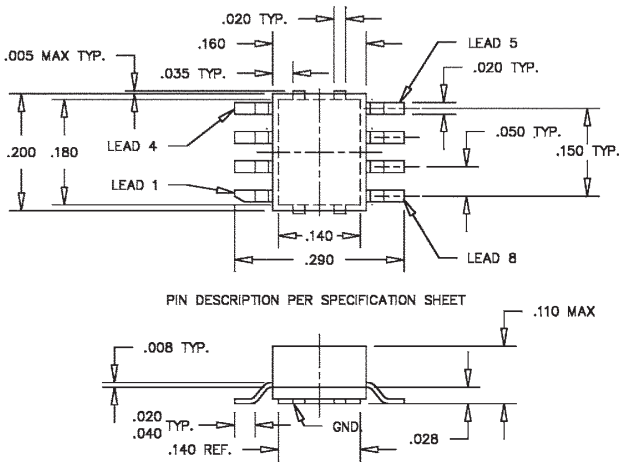

Package 85

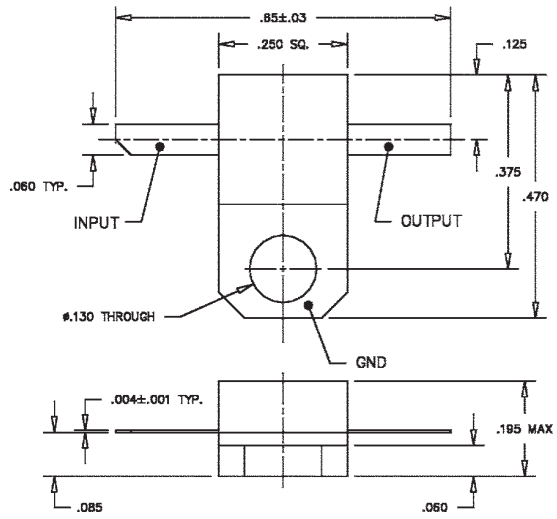

Outline drawings

Dimensions in mm and inches (1 mm = 0.0394")

Package 87

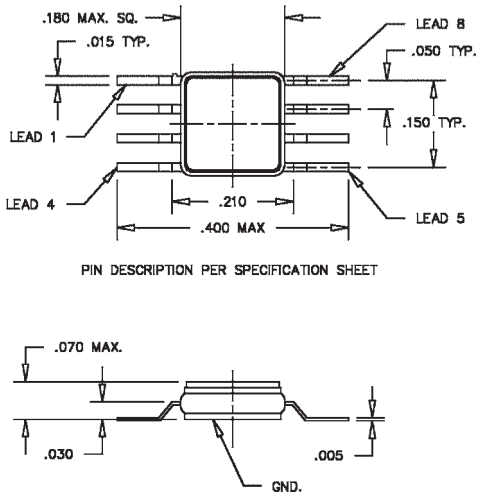

Package 70

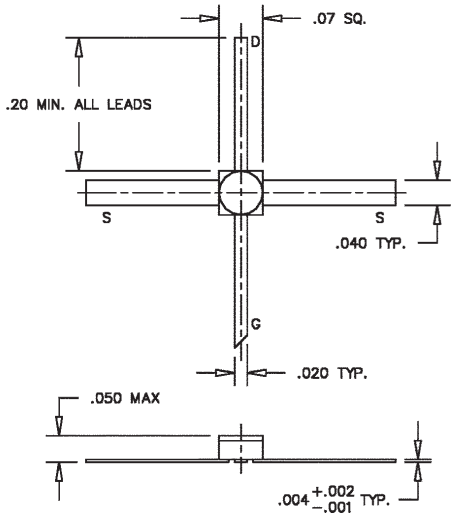

Package 71

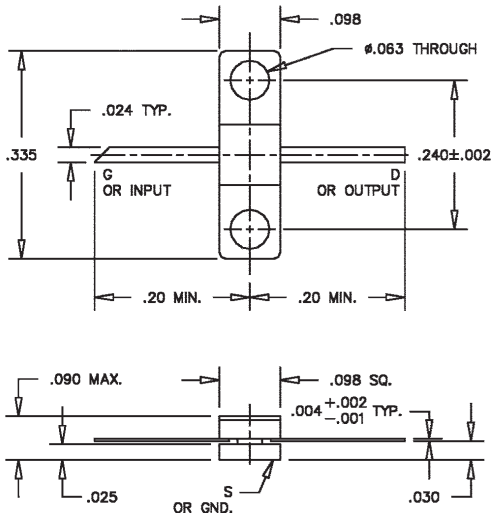

Package 73

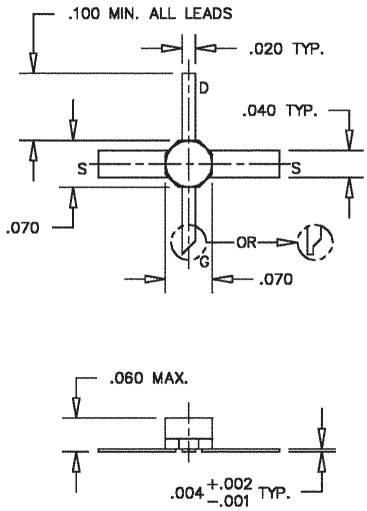

Slim-Pak

SH & SL Housing Series

SMA Female, DC Filter Feedthru

Though Hole Mounting

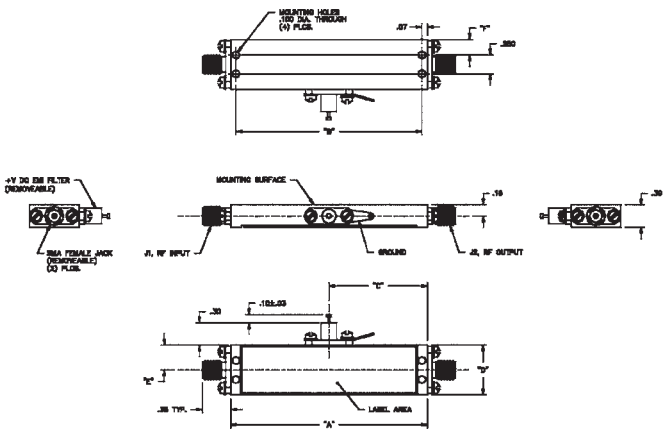

SZ-1

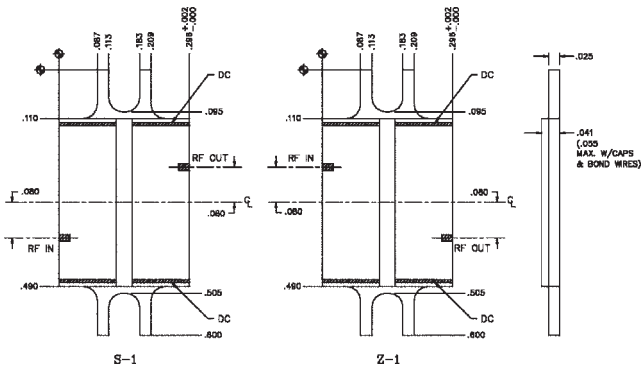

Outline drawings

Dimensions in mm and inches (1 mm = 0.0394")

SZ-2

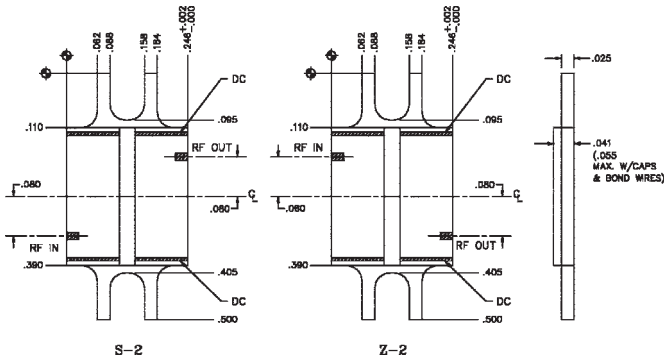

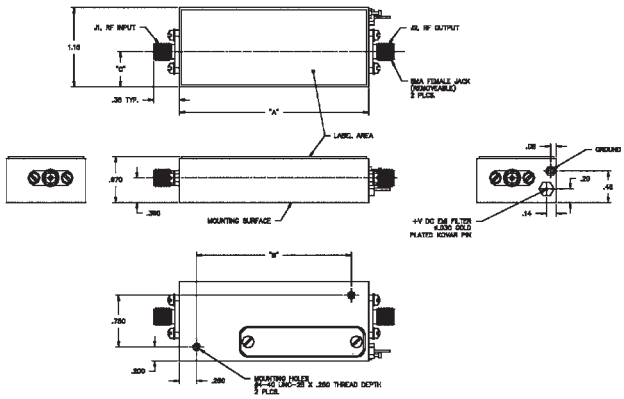

UL1

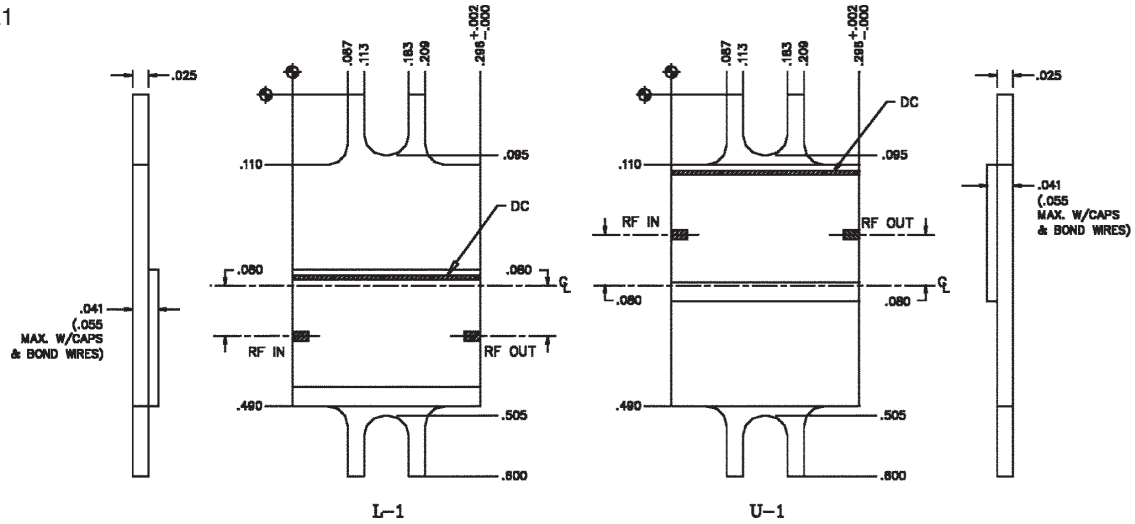

UL2

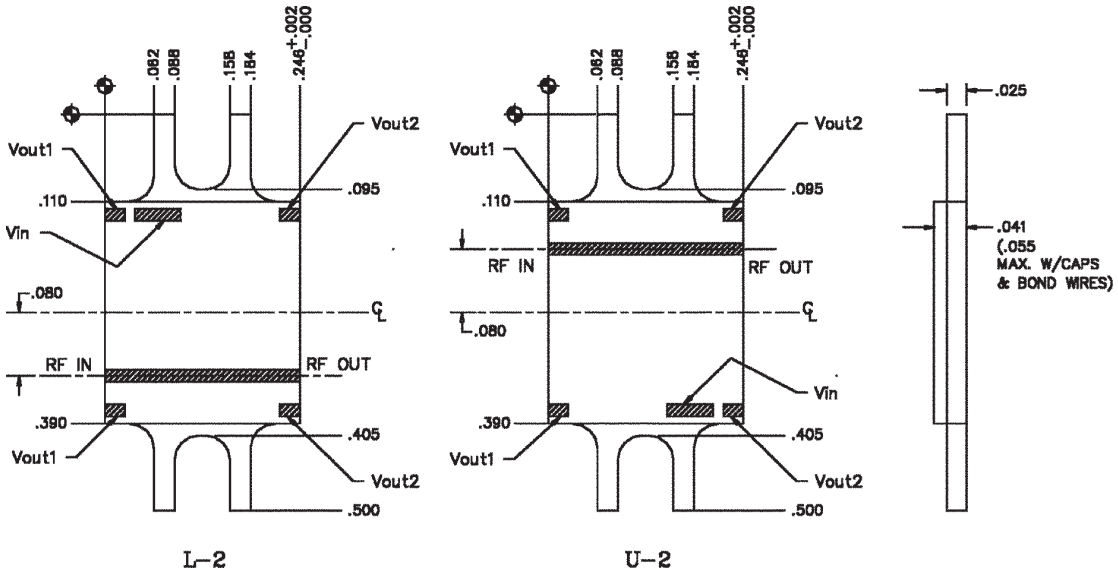

Outline drawings

Dimensions in mm and inches (1 mm = 0.0394")

Package 02

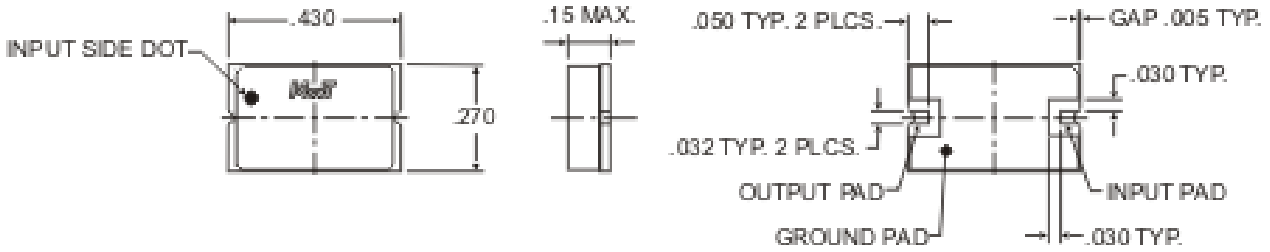

Package 96

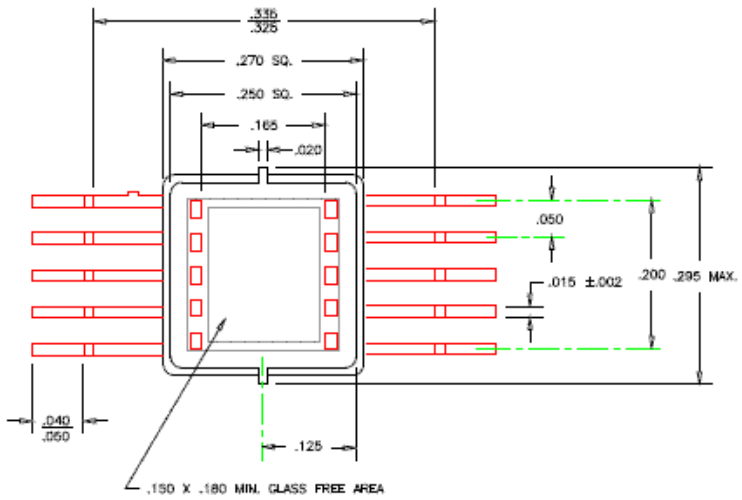

Package -QFN

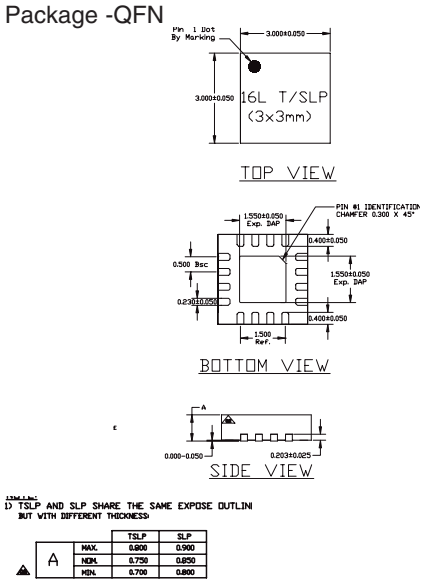

Package 99

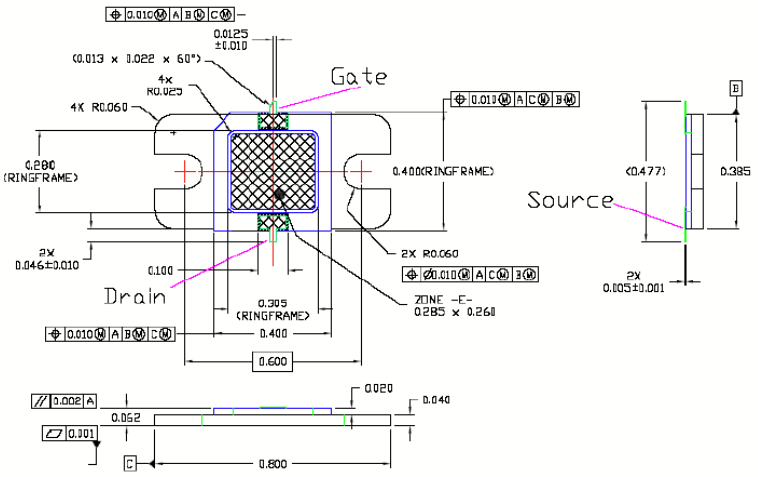

Package 89

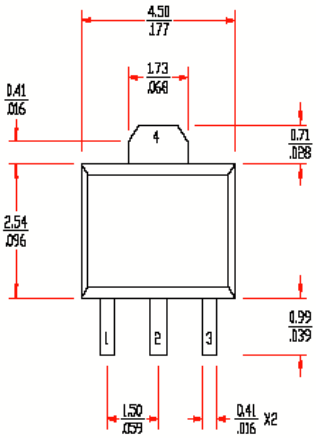

IXYS

Dimensions in mm and inches (1 mm = 0.0394")

X001 SMA (DO-214 AC)

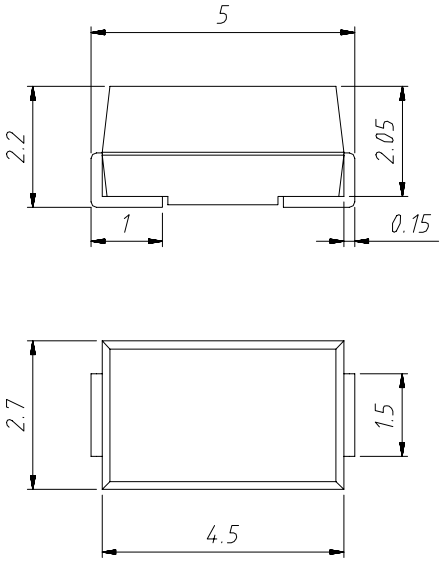

X002 SMB (DO-214 AA)

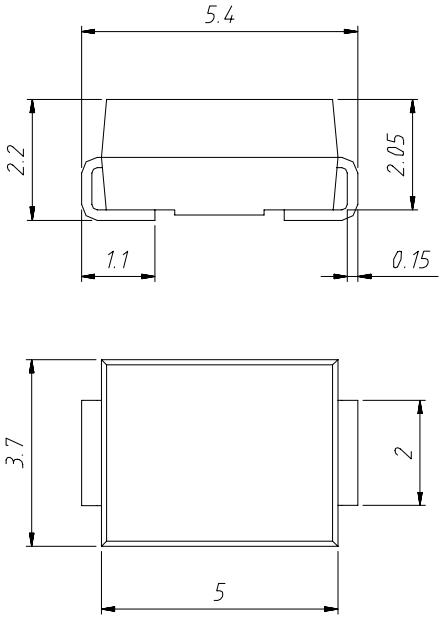

X003 TO-251 AA

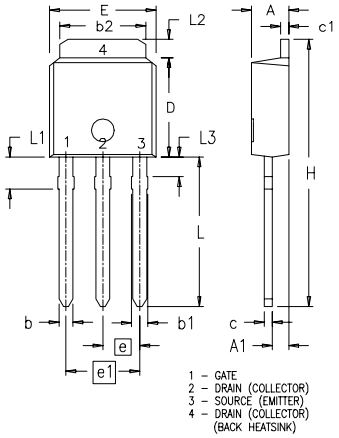

Dim.	Millimeter Min.	Millimeter Max.	Inches Min.	Inches Max.
A	2.19	2.38	.086	.094
A1	0.89	1.14	0.35	.045
b	0.64	0.89	.025	.035
b1	0.76	1.14	.030	.045
b2	5.21	5.46	.205	.215
c	0.46	0.58	.018	.023
c1	0.46	0.58	.018	.023
D	5.97	6.22	.235	.245
E	6.35	6.73	.250	.265
e	2.28	BSC	.090	BSC
e1	4.57	BSC	.180	BSC
H	17.02	17.78	.670	.700
L	8.89	9.65	.350	.380
L1	1.91	2.28	.075	.090
L2	0.89	1.27	.035	.050
L3	1.15	1.52	.045	.060

X004 TO-252 AA (D PAK)

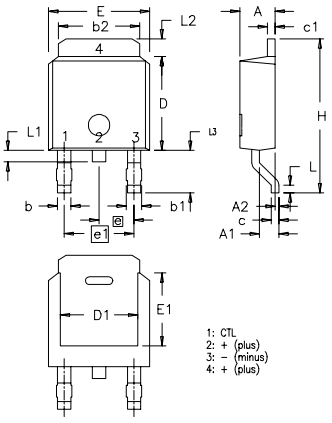

Dim.	Millimeter Min.	Millimeter Max.	Inches Min.	Inches Max.
A	2.20	2.40	0.086	0.094
A1	0.82	1.22	0.035	0.045
A2	-0.2	0.30	0	0.005
b	0.64	0.89	0.025	0.035
b1	0.76	1.14	0.030	0.045
b2	5.21	5.46	0.205	0.215
c	0.46	0.58	0.018	0.023
c1	0.46	0.58	0.018	0.023
D	5.97	6.22	0.235	0.245
D1	4.32	5.21	0.170	0.205
E	6.35	6.73	0.250	0.265
E1	4.32	5.21	0.170	0.205
e	2.28 BSC		0.090 BSC	
e1	4.57 BSC		0.180 BSC	
H	9.40	10.42	0.370	0.410
L	0.51	1.02	0.020	0.040
L1	0.64	1.02	0.025	0.040
L2	0.89	1.27	0.035	0.050
L3	2.54	2.92	0.100	0.115

X005a TO-220 AB

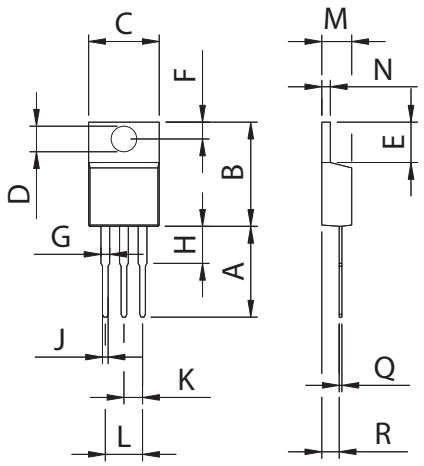

Dim.	Millimeter Min.	Millimeter Max.	Inches Min.	Inches Max.
A	12.70	13.97	0.500	0.550
B	14.73	16.00	0.580	0.630
C	9.91	10.66	0.390	0.420
D	3.54	4.08	0.139	0.161
E	5.85	6.85	0.230	0.270
F	2.54	3.18	0.100	0.125
G	1.15	1.65	0.045	0.065
H	2.79	5.84	0.110	0.230
J	0.64	1.01	0.025	0.040
K	2.54	BSC	0.100	BSC
M	4.32	4.82	0.170	0.190
N	1.14	1.39	0.045	0.055
Q	0.35	0.56	0.014	0.022
R	2.29	2.79	0.090	0.110

X005b TO-220 AC

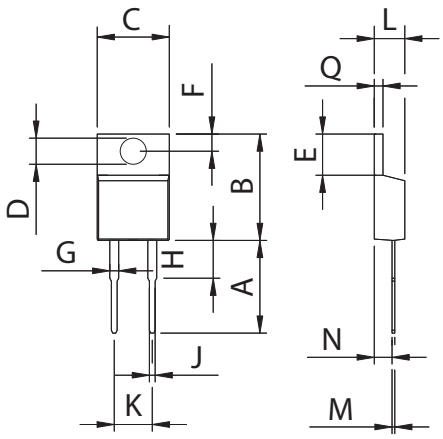

Dim.	Millimeter Min.	Millimeter Max.	Inches Min.	Inches Max.
A	12.70	14.73	0.500	0.580
B	14.23	16.51	0.560	0.650
C	9.66	10.66	0.380	0.420
D	3.54	4.08	0.139	0.161
E	5.85	6.85	2.300	0.420
F	2.54	3.42	0.100	0.135
G	1.15	1.77	0.045	0.070
H	-	6.35	-	0.250
J	0.64	0.89	0.025	0.035
K	4.83	5.33	0.190	0.210
L	3.56	4.82	0.140	0.190
M	0.51	0.76	0.020	0.030
N	2.04	2.49	0.080	0.115
Q	0.64	1.39	0.025	0.055

IXYS

Dimensions in mm and inches (1 mm = 0.0394")

X006 TO-220 (5)

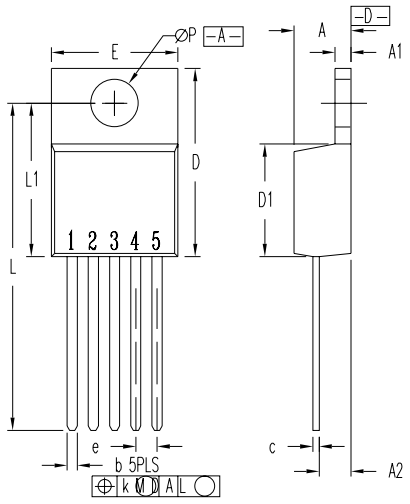

SYM	INCHES MIN	INCHES MAX	MILLIMETERS MIN	MILLIMETERS MAX
A	.170	.190	4.32	4.83
A1	.045	.055	1.14	1.40
A2	.090	.115	2.29	2.92
b	.025	.040	0.64	1.02
c	.015	.025	0.38	0.64
D	.580	.620	14.73	15.75
D1	.340	.370	8.64	9.40
E	.390	.415	9.91	10.54
e	.067 BSC		1.70 BSC	
k	0	.014	0	0.36
L	.995	1.045	25.27	26.54
L1	.470	.510	11.94	12.95
P	.139	.156	3.53	3.96

X007a TO-220 ABFP

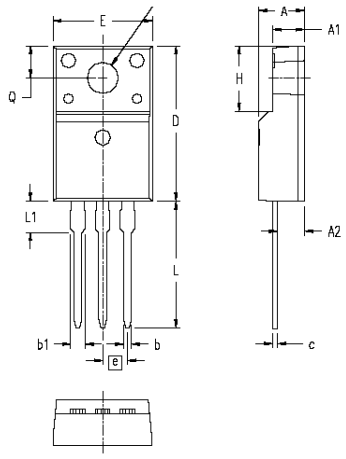

SYM	INCHES MIN	INCHES MAX	MILLIMETER MIN	MILLIMETER MAX
A	.177	.193	4.50	4.90
A1	.092	.108	2.34	2.74
A2	.101	.117	2.56	2.96
b	.028	.035	0.70	0.90
b1	.050	.058	1.27	1.47
c	.018	.024	0.45	0.60
D	.617	.633	15.67	16.07
E	.392	.408	9.96	10.36
e	.100BSC		2.54 BSC	
H	.255	.271	6.48	6.88
L	.499	.523	12.68	13.28
L1	.119	.135	3.03	3.43
Ø P	.0121	.129	3.08	3.28
Q	.126	.134	3.20	3.40

X007b TO-220 ACFP

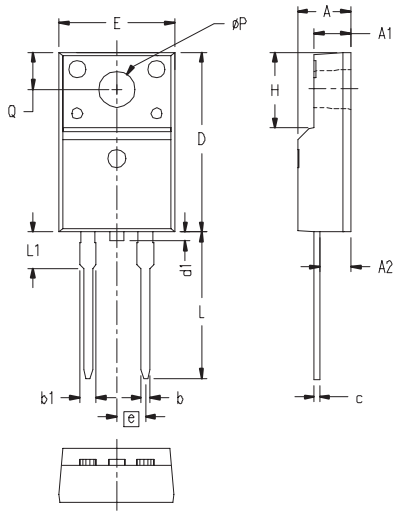

SYM	INCHES MIN	INCHES MAX	MILLIMETERS MIN	MILLIMETERS MAX
A	.177	.193	4.50	4.90
A1	.092	.108	2.34	2.74
A2	.101	.117	2.56	2.96
b	.028	.035	0.70	0.90
b1	.050	.058	1.27	1.47
c	.018	.024	0.45	0.60
D	.617	.633	15.67	16.07
d1	0	.043	0	1.10
E	.392	.408	9.96	10.36
e	.100 BSC		2.54 BSC	
H	.255	.271	6.48	6.88
L	.499	.523	12.68	13.28
L1	.119	.135	3.03	3.43
ØP	.121	.129	3.08	3.28
Q	.126	.134	3.20	3.40

X008 TO-262 I²PAK

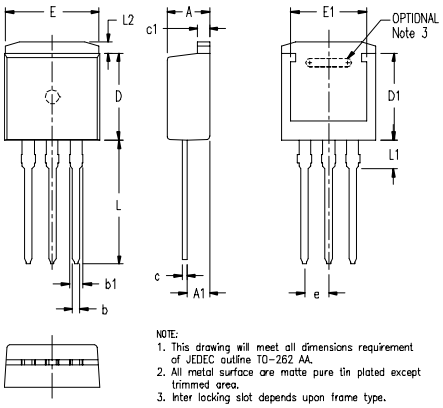

SYM	INCHES MIN	INCHES MAX	MILLIMETERS MIN	MILLIMETERS MAX
A	.160	.190	4.06	4.83
A1	.080	.110	2.03	2.79
b	.025	.035	0.64	0.88
b1	.025	.039	1.14	1.40
c	.018	.025	0.46	0.64
c1	.045	.055	1.14	1.40
D	.340	.380	8.64	9.65
D1	.270	.290	6.86	7.37
E	.380	.405	9.65	10.29
E1	.245	.320	6.22	8.13
e	.100 BSC		2.54 BSC	
L	.500	.560	12.70	14.22
L1	.100	.125	2.54	3.18
L2	.040	.055	1.02	1.40

X009 PLUS220

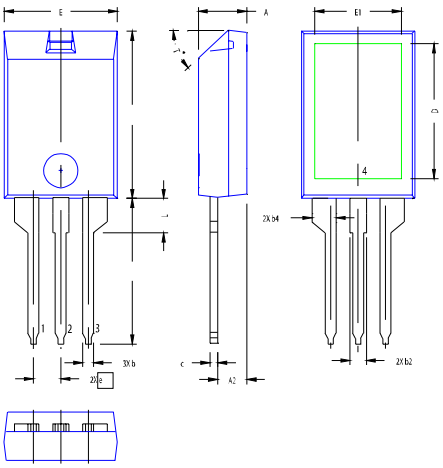

SYM	INCHES MIN	INCHES MAX	MILLIMETER MIN	MILLIMETER MAX
A	.157	.197	4.00	5.00
A2	.098	.118	2.50	3.00
b	.035	.051	0.90	1.30
b2	.049	.065	1.25	1.65
b4	.093	1.00	2.35	2.55
c	.028	.039	0.70	1.00
D	.591	.630	15.00	16.00
D1	.472	.512	12.00	13.00
E	.394	.433	10.00	11.00
E1	.295	.335	7.50	8.5 0
e	.100 BASIC		2.55 BASIC	
L	.512	.571	13.00	14.50
L1	.118	.138	3.00	3.50
T°			42.5°	47.5°

X010a ISOPLUS 220™ AB

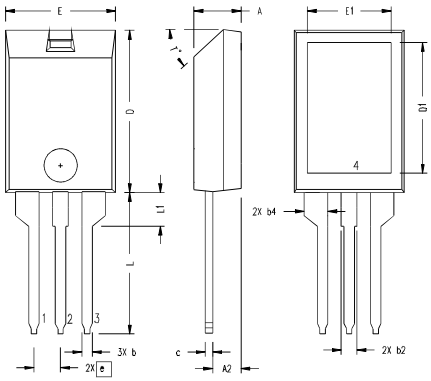

NOTE:
1. Bottom heatsink (Pin 4) is electrically isolated from Pin 1, 2, or 3.
2. This drawing will meet dimensional requirement of JEDEC SS Product Outline TO-273 except D and D1 dimension.

SYM	INCHES MIN.	INCHES MAX	MILLIMETERS MIN	MILLIMETERS MAX
A	.157	.197	4.00	5.00
A2	.098	.118	2.50	3.00
b	.035	.051	0.90	1.30
b2	.049	.065	1.25	1.65
b4	.093	.100	2.35	2.55
c	.028	.039	0.70	1.00
D	.591	.630	15.00	16.00
D1	.472	.512	12.00	13.00
E	.394	.433	10.00	11.00
E1	.295	.335	7.50	8.50
e	.100 BASIC		2.55 BASIC	
L	.512	.571	13.00	14.50
L1	.118	.138	3.00	3.50
T°			42.5°	47.5°

IXYS

Dimensions in mm and inches (1 mm = 0.0394")

X010b ISOPLUS 220™ AC

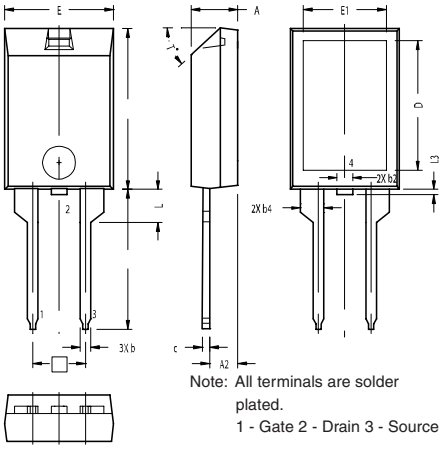

Note: All terminals are solder plated.
1 - Gate 2 - Drain 3 - Source

SYM	INCHES MIN	INCHES MAX	MILLIMETER MIN	MILLIMETER MAX
A	.157	.197	4.00	5.00
A2	.098	.118	2.50	3.00
b	.035	.051	0.90	1.30
b2	.049	.065	1.25	1.65
b4	.093	.100	2.35	2.55
c	.028	.039	0.70	1.00
D	.591	.630	15.00	16.00
D1	.472	.512	12.00	13.00
E	.394	.433	10.00	11.00
E1	.295	.335	7.50	8.50
e	.200BSC		5.08 BSC	
L	.512	.571	13.00	14.50
L1	.118	.138	3.00	3.50
L2	.035	.051	0.90	1.30
L3	.000	.059	.000	1.50
T°			42.5°	47.5°

X011a TO-263 AA (D²PAK)

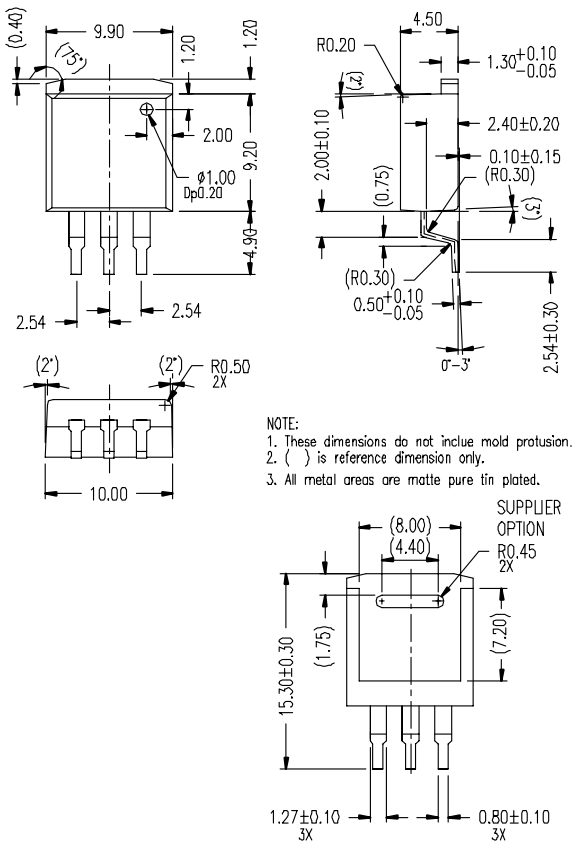

X011b TO-263 AB (D²PAK)

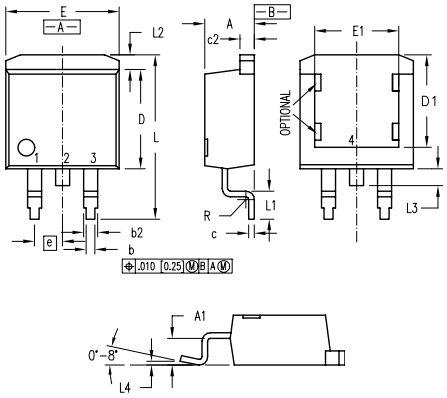

Dim.	Millimeter Min.	Millimeter Max.	Inches Min.	Inches Max.
A	4.06	4.83	.160	.190
A1	2.03	2.79	.080	.110
b	0.51	0.99	.020	.039
b2	1.14	1.40	.045	.055
c	0.46	0.74	.018	.029
c2	1.14	1.40	.045	.055
D	8.64	9.65	.340	.380
D1	7.11	8.13	.280	.320
E	9.65	10.29	.380	.405
E1	6.86	8.13	.270	.320
e	2.54	BSC	.100	BSC
L	14.61	15.88	.575	.625
L1	2.29	2.79	.090	.110
L2	1.02	1.68	.040	.066
L3	1.27	1.78	.050	.070
L4	0	0.38	0	.015
R	0.46	0.74	.018	.029

X012a TO-263 (5)

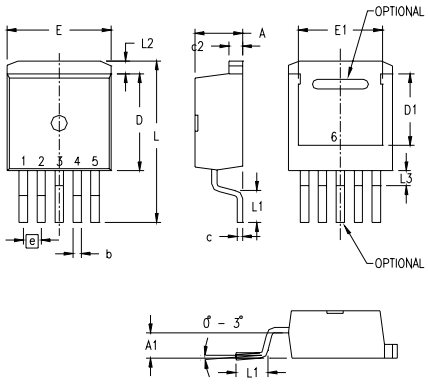

SYM	INCHES MIN	INCHES MAX	MILLIMETERS MIN	MILLIMETERS MAX
A	.165	.189	4.20	4.80
A1	.083	.106	2.10	2.70
b	.024	.039	0.60	0.99
c	.016	.028	0.40	0.70
c2	.047	.055	1.20	1.40
D	.346	.374	8.80	9.50
D1	.260	.283	6.60	7.20
E	.380	.406	9.65	10.30
E1	.295	.323	7.50	8.20
e	.067BSC		1.70 BSC	
L	.583	.622	14.80	15.80
L1	.088	.112	2.24	2.84
L2	.039	.055	1.00	1.40
L3	.047	.067	1.20	1.70

X012b TO-263 (7)

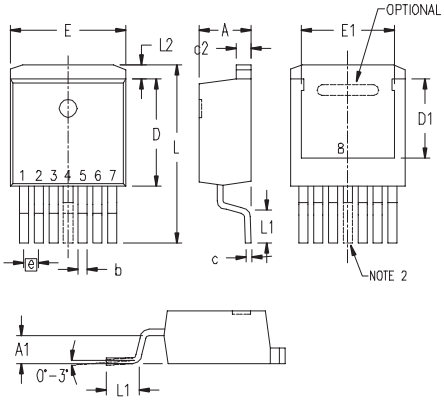

SYM	INCHES MIN	INCHES MAX	MILLIMETER MIN	MILLIMETER MAX
A	.165	.181	4.20	4.60
A1	.096	.108	2.45	2.75
b	.026	.035	0.65	0.90
c	.016	.024	0.40	0.60
c2	.045	.055	1.14	1.40
D	.330	.340	8.38	8.64
D1	.240	.250	6.10	6.35
E	.394	.406	10.00	10.30
E1	.290	.315	7.34	8.00
e	.050 BSC		1.27BSC	
L	.580	.620	14.73	15.75
L1	.088	.112	2.24	2.84
L2	.053	.061	1.35	1.55

IXYS

Dimensions in mm and inches (1 mm = 0.0394")

X013 PLUS220 (SMD)

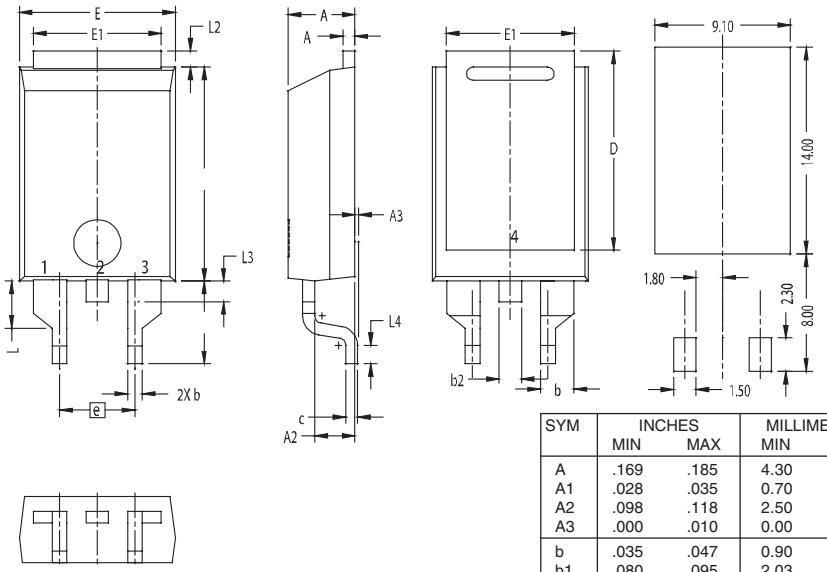

SYM	INCHES MIN	INCHES MAX	MILLIMETER MIN	MILLIMETER MAX
A	.169	.185	4.30	4.70
A1	.028	.035	0.70	0.90
A2	.098	.118	2.50	3.00
A3	.000	.010	0.00	0.25
b	.035	.047	0.90	1.20
b1	.080	.095	2.03	2.41
b2	.054	.064	1.37	1.63
c	.028	.035	0.70	0.90
D	.551	.591	14.00	15.00
D1	.512	.539	13.00	13.70
E	.394	.433	10.00	11.00
E1	.331	.346	8.40	8.80
e	.200 BSC		5.08 BSC	
L	.209	.228	5.30	5.80
L1	.118	.138	3.00	3.50
L2	.035	.051	0.90	1.30
L3	.047	.059	1.20	1.50
L4	.039	.059	1.00	1.50

X014a TO-247 AD

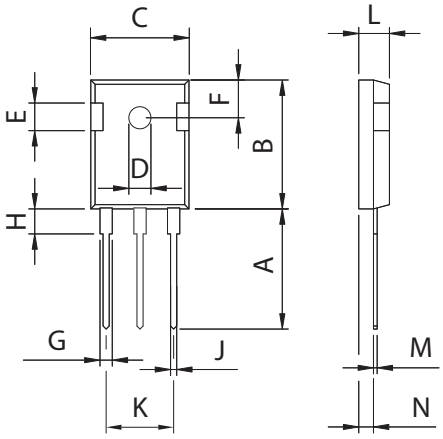

Dim.	Millimeter Min.	Millimeter Max.	Inches Min.	Inches Max.
A	19.81	20.32	0.780	0.800
B	20.80	21.46	0.819	0.845
C	15.75	16.26	0.610	0.640
D	3.55	3.65	0.140	0.144
E	4.32	5.49	0.170	0.216
F	5.4	6.2	0.212	0.244
G	1.65	2.13	0.065	0.084
H	-	4.5	-	0.177
J	1.0	1.4	0.040	0.055
K	10.8	11.0	0.426	0.433
L	4.7	5.3	0.185	0.209
M	0.4	0.8	0.016	0.031
N	1.5	2.49	0.087	0.102

X014b TO-247 AD

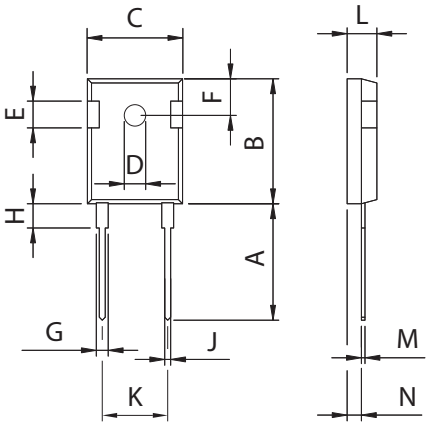

Dim.	Millimeter Min.	Millimeter Max.	Inches Min.	Inches Max.
A	19.81	20.32	0.780	0.800
B	20.80	21.46	0.819	0.845
C	15.75	16.26	0.610	0.640
D	3.55	3.65	0.140	0.144
E	4.32	5.49	0.170	0.216
F	5.4	6.2	0.212	0.244
G	1.65	2.13	0.065	0.084
H	-	4.5	-	0.177
J	1.0	1.4	0.040	0.055
K	10.8	11.0	0.426	0.433
L	4.7	5.3	0.185	0.209
M	0.4	0.8	0.016	0.031
N	1.5	2.49	0.087	0.102

X015 PLUS247™

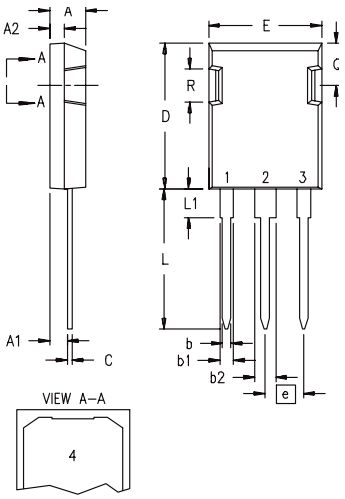

Dim.	Millimeter Min.	Millimeter Max.	Inches Min.	Inches Max.
A	4.83	5.21	.190	.205
A_1	2.29	2.54	.090	.100
A_2	1.91	2.16	.075	.085
b	1.14	1.40	.045	.055
b_1	1.91	2.13	.075	.084
b_2	2.92	3.12	.115	.123
C	0.61	0.80	.024	.031
D	20.80	21.34	.819	.840
E	15.75	16.13	.620	.635
e	5.45 BSC		.215 BSC	
L	19.81	20.32	.780	.800
L1	3.81	4.32	.150	.170
Q	5.59	6.20	.220	.244
R	4.32	4.83	.170	.190

X016a ISOPLUS247

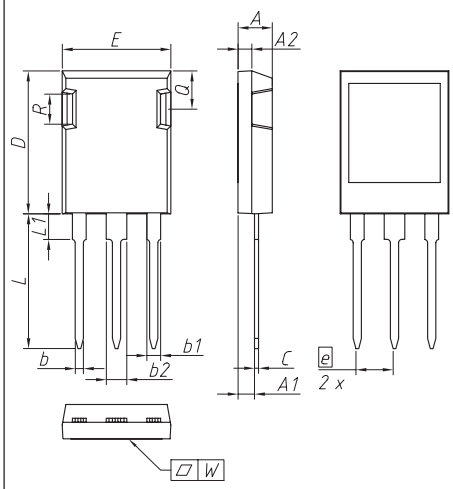

DIM.	MILLIMETER MIN	MILLIMETER MAX	INCHES MIN	INCHES MAX
A	4,83	5,21	0,190	0,205
A1	2,29	2,54	0,090	0,100
A2	1,91	2,16	0,075	0,085
b	1,14	1,40	0,045	0,055
b1	1,91	2,15	0,075	0,085
b2	2,92	3,20	0,115	0,126
C	0,61	0,83	0,024	0,033
D	20,80	21,34	0,819	0,840
E	15,75	16,13	0,620	0,635
e	5,45 BSC		0,215 BSC	
L	19,81	20,60	0,780	0,811
L1	3,81	4,38	0,150	0,172
Q	5,59	6,20	0,220	0,244
R	4,32	4,85	0,170	0,191
W *	–	0,10	–	0,004

* convex bow of substrate is typ. < 0,04 mm over plastic surface level of device bottom side

IXYS

Dimensions in mm and inches (1 mm = 0.0394")

X016b ISOPLUS247

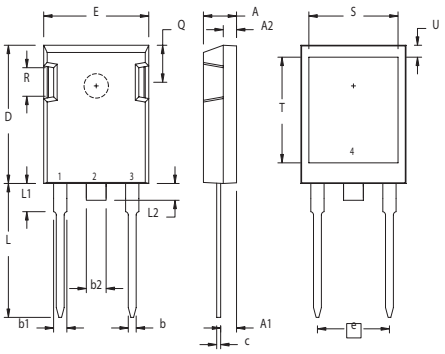

NOTE: 1. This drawing will meet all dimensions requirement of JEDEC outline TO-247AD except screw hole.
2. Leads terminals are Pb-free solder plated.
3. Bottom heatsink (4) is pre-Ni plated and electrically isolated 2,500V from pin 1, 2, and 3.

SYM	INCHES		MILLIMETERS	
	MIN	MAX	MIN	MAX
A	.190	.205	4.83	5.21
A1	.090	.100	2.29	2.54
A2	.075	.085	1.91	2.16
b	.045	.055	1.14	1.40
b1	.075	.084	1.91	2.13
b2	.115	.123	2.92	3.12
c	.024	.031	0.61	0.80
D	.819	.840	20.80	21.34
E	.620	.635	15.75	16.13
e	.430 BSC		10.92 BSC	
L	.780	.800	19.81	20.32
L1	.150	.170	3.81	4.32
L2	0	.100	0	2.54
Q	.220	.244	5.59	6.20
R	.170	.190	4.32	4.83
S	.520	.540	13.21	13.72
T	.620	.640	15.75	16.26
U	.065	.080	1.65	2.03

X017a TO-3P

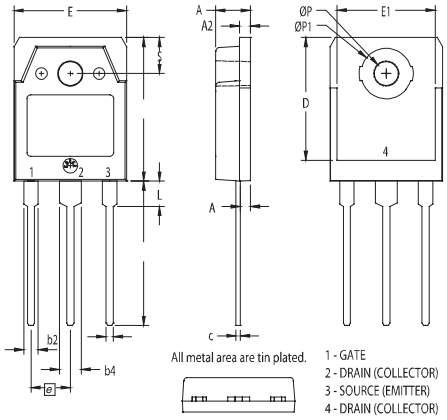

All metal area are tin plated.

1 - GATE
2 - DRAIN (COLLECTOR)
3 - SOURCE (EMITTER)
4 - DRAIN (COLLECTOR)

SYM	INCHES		MILLIMETERS	
	MIN	MAX	MIN	MAX
A	.185	.193	4.70	4.90
A1	.051	.059	1.30	1.50
A2	.057	.065	1.45	1.65
b	.035	.045	0.90	1.15
b2	.075	.087	1.90	2.20
b4	.114	.126	2.90	3.20
c	.022	.031	0.55	0.80
D	.780	.791	19.80	20.10
D1	.665	.677	16.90	17.20
E	.610	.622	15.50	15.80
E1	.531	.539	13.50	13.70
e	.215 BSC		5.45 BSC	
L	.779	.795	19.80	20.20
L1	.134	.142	3.40	3.60
ØP	.126	.134	3.20	3.40
ØP1	.272	.280	6.90	7.10
S	.193	.201	4.90	5.10

X017b TO-3P

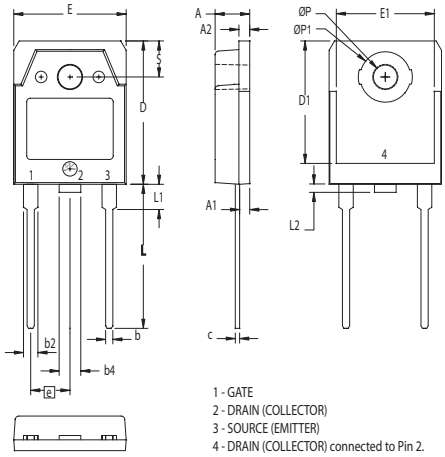

1 - GATE
2 - DRAIN (COLLECTOR)
3 - SOURCE (EMITTER)
4 - DRAIN (COLLECTOR) connected to Pin 2.

SYM	INCHES		MILLIMETERS	
	MIN	MAX	MIN	MAX
A	.185	.193	4.70	4.90
A1	.051	.059	1.30	1.50
A2	.057	.065	1.45	1.65
b	.035	.045	0.90	1.15
b2	.075	.087	1.90	2.20
b4	.114	.126	2.90	3.20
c	.022	.031	0.55	0.80
D	.780	.799	19.80	20.30
D1	.665	.677	16.90	17.20
E	.610	.622	15.50	15.80
E1	.531	.539	13.50	13.70
e	.215 BSC		5.45 BSC	
L	.779	.795	19.80	20.20
L1	.134	.142	3.40	3.60
L2	0	.055	0	1.40
ØP	.126	.134	3.20	3.40
ØP1	.272	.280	6.90	7.10
S	.193	.201	4.90	5.10

X018 TO-268 I³PAK

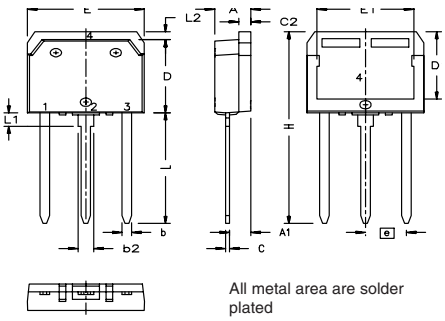

All metal area are solder plated
1 - gate
2 - drain (collector)
3 - source (emitter)
4 - drain (collector)

Dim.	Inches		Millimeters	
	Min	Max	Min	Max
A	.193	.201	4.90	5.10
A1	.106	.114	2.70	2.90
b	.045	.057	1.15	1.45
b2	.075	.083	1.90	2.10
C	.016	.026	.040	.065
C2	.057	.063	1.45	1.60
D	.543	.551	13.80	14.00
D1	.488	.500	12.40	12.70
E	.624	.632	15.85	16.05
E1	.524	.535	13.30	13.60
e	.215 BSC		5.45 BSC	
H	1.365	1.395	34.67	35.43
L	.780	.800	19.81	20.32
L1	.079	.091	2.00	2.30
L2	.039	.045	1.00	1.15

X019 TO-268 AA (D³PAK)

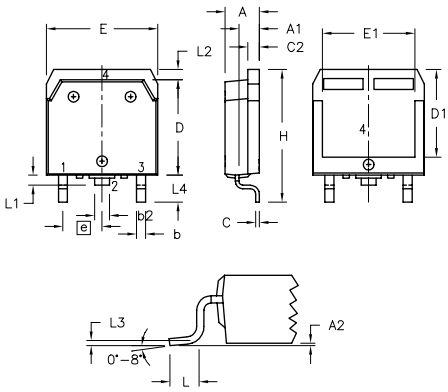

Dim.	Millimeter		Inches	
	Min.	Max.	Min.	Max.
A	4.9	5.1	.193	.201
A_1	2.7	2.9	.106	.114
A_2	.02	.25	.001	.010
b	1.15	1.45	.045	.057
b_2	1.9	2.1	.75	.83
C	.4	.65	.016	.026
D	13.80	14.00	.543	.551
E	15.85	16.05	.624	.632
E_1	13.3	13.6	.524	.535
e	5.45 BSC			
	.215 BSC			
H	18.70	19.10	.736	.752
L	2.40	2.70	.094	.106
L1	1.20	1.40	.047	.055
L2	1.00	1.15	.039	.045
L3	0.25 BSC		.010 BSC	
L4	3.80	4.10	.150	.161

X020 TO-264 AA

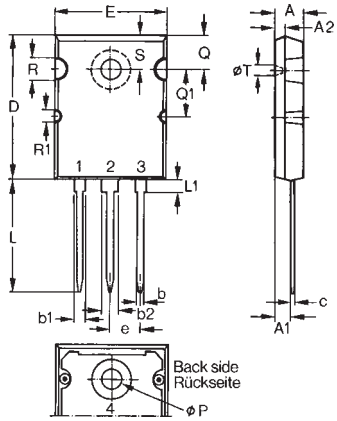

Dim.	Millimeter		Inches	
	Min.	Max.	Min.	Max.
A	4.82	5.13	.190	.202
A1	2.54	2.89	.100	.114
A2	2.00	2.10	.079	.083
b	1.12	1.42	.044	.056
b1	2.39	2.69	.094	.106
b2	2.90	3.09	.114	.122
c	0.53	0.83	.021	.033
D	25.91	26.16	1.020	1.030
E	19.81	19.96	.780	.786
e	5.46 BSC		.215 BSC	
J	0.00	0.25	.000	.010
K	0.00	0.25	.000	.010
L	20.32	20.83	.800	.820
L1	2.29	2.59	.090	.102
P	3.17	3.66	.125	.144
Q	6.07	6.27	.239	.247
Q1	8.38	8.69	.330	.342
R	3.81	4.32	.150	.170
R1	1.78	2.29	.070	.090
S	6.04	6.30	.238	.248
T	1.57	1.83	.062	.072

IXYS

Dimensions in mm and inches (1 mm = 0.0394")

X021 PLUS264

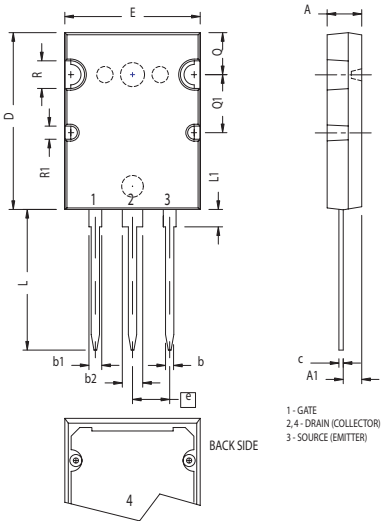

SYM	INCHES		MILLIMETERS	
	MIN	MAX	MIN	MAX
A	.185	.209	4.70	5.31
A1	.102	.118	2.59	3.00
b	.037	.055	0.94	1.40
b1	.087	.102	2.21	2.59
b2	.110	.126	2.79	3.20
c	.017	.029	0.43	0.74
D	1.007	1.047	25.58	26.59
E	.760	.799	19.30	20.29
e	.215 BSC		5.46 BSC	
L	.779	.842	19.79	21.39
L1	.087	.102	2.21	2.59
Q	.240	.256	6.10	6.50
Q1	.330	.346	8.38	8.79
∅R	.155	.187	3.94	4.75
∅R1	.085	.093	2.16	2.36

X022 ISOPLUS264

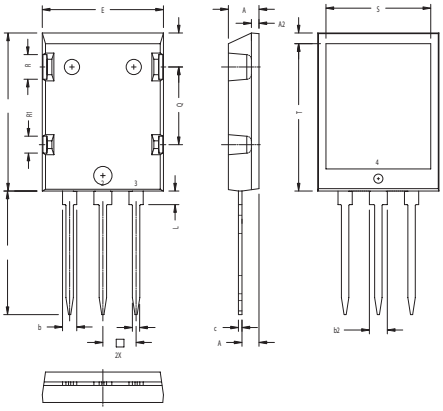

SYM	INCHES		MILLIMETER	
	MIN	MAX	MIN	MAX
A1	.102	.118	2.59	3.00
A2	.046	.055	1.17	1.40
b	.045	.055	1.14	1.40
b1	.087	.102	2.21	2.59
b2	.100	.110	2.54	2.79
c	.020	.029	0.51	0.74
D	1.020	1.040	25.91	26.42
E	.770	.799	19.56	20.29
e	.150 BSC		3.81 BSC	
L	.780	.820	19.81	20.83
L1	.080	.102	2.03	2.59
Q	.210	.235	5.33	5.97
Q1	.490	.513	12.45	13.03
R	.150	.180	3.81	4.57
R1	.100	.130	2.54	3.30
S	.668	.690	16.97	17.53
T	.801	.821	20.34	20.85
U	.065	.080	1.65	2.03

X022c ISOPLUS264 (3HV)

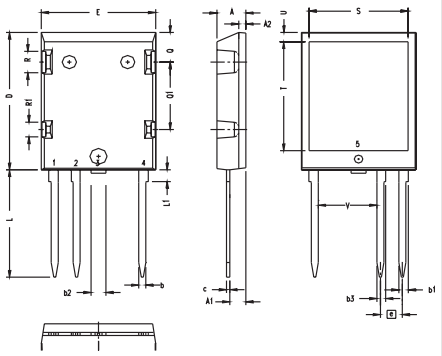

SYM	INCHES		MILLIMETERS	
	MIN	MAX	MIN	MAX
A	.190	.205	4.83	5.21
A1	.102	.118	2.59	3.00
A2	.046	.055	1.17	1.40
b	.045	.055	1.14	1.40
b1	.063	.072	1.60	1.83
b2	.100	.110	2.54	2.79
b3	.058	.068	1.47	1.73
c	.020	.029	0.51	0.74
D	1.020	1.040	25.91	26.42
E	.770	.799	19.56	20.29
e	.150 BSC		3.81 BSC	
L	.780	.820	19.81	20.83
L1	.080	.102	2.03	2.59
Q	.210	.235	5.33	5.97
Q1	.490	.513	12.45	13.03
R	.150	.180	3.81	4.57
R1	.100	.130	2.54	3.30
S	.668	.690	16.97	17.53
T	.801	.821	20.34	20.85
U	.065	.080	1.65	2.03
V	.398	.406	10.11	10.31

X023 ISO264

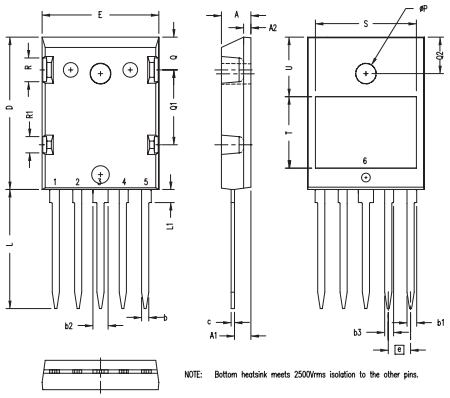

SYM	INCHES		MILLIMETERS	
	MIN	MAX	MIN	MAX
A	.190	.205	4.83	5.21
A1	.102	.118	2.59	3.00
A2	.046	.055	1.17	1.40
b	.045	.055	1.14	1.40
b1	.063	.072	1.60	1.83
b2	.100	.110	2.54	2.79
b3	.058	.068	1.47	1.73
c	.020	.029	0.51	0.74
D	1.020	1.040	25.91	26.42
E	.770	.799	19.56	20.29
e	.150 BSC		3.81 BSC	
L	.780	.820	19.81	20.83
L1	.080	.102	2.03	2.59
P	.130	.145	3.30	3.68
Q	.210	.235	5.33	5.97
Q1	.490	.513	12.45	13.03
Q2	.235	.255	5.96	6.48
R	.150	.180	3.81	4.57
R1	.100	.130	2.54	3.30
S	.668	.690	16.97	17.53
T	.470	.490	11.94	12.45
U	.390	.410	9.91	10.41

X024a ISOPLUS i4-Pac™

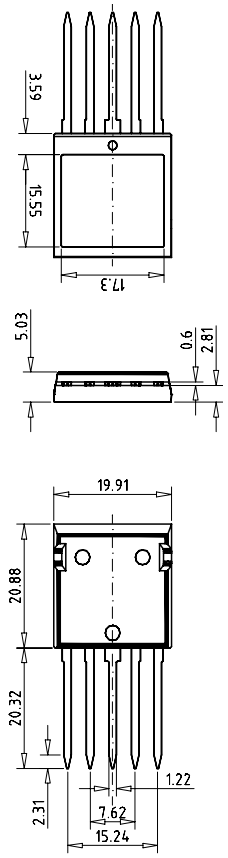

X024b ISOPLUS i4-Pac™

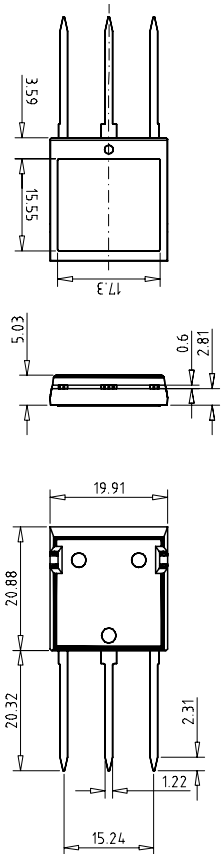

Dimensions in mm and inches (1 mm = 0.0394")

X024c ISOPLUS i4-Pac™

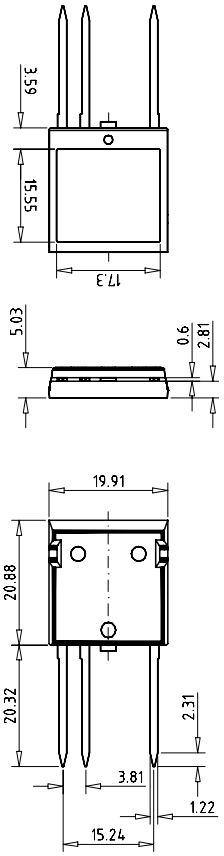

X025 GBFP

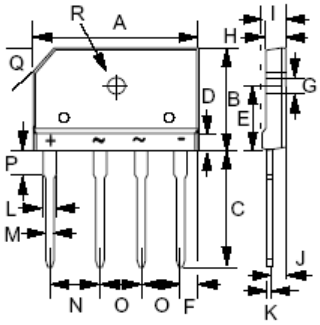

DIM.	MIN.	MAX.
A	29.70	30.30
B	19.70	20.30
C	17.0	18.0
D	4.70	4.90
E	10.80	11.20
F	2.30	2.70
G	3.10	3.40
H	3.40	3.80
I	4.40	4.80
J	2.50	2.90
K	0.60	0.80
L	2.00	2.40
M	0.90	1.10
N	9.80	10.20
O	7.30	7.70
P	3.80	4.20
Q	(3.0) x 45°	
R	3.10 ø	3.40 ø
All Dimensions in millimeter		

X026a ISOPLUS-DIL (SL)

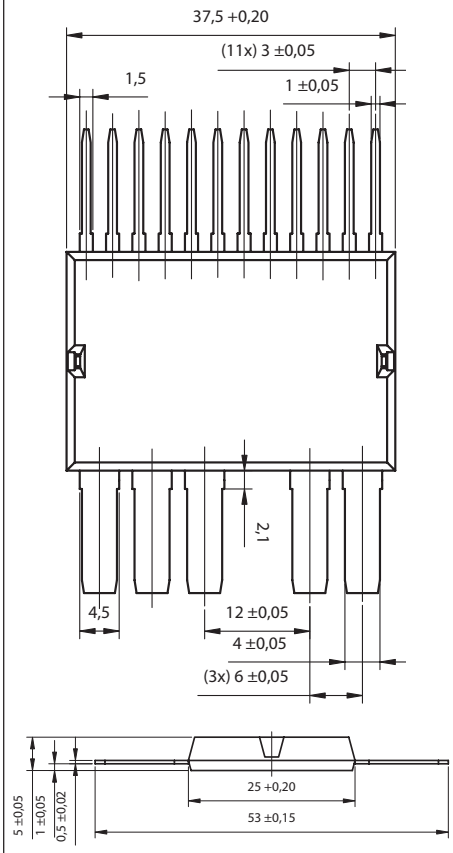

X026b ISOPLUS-DIL (BL)

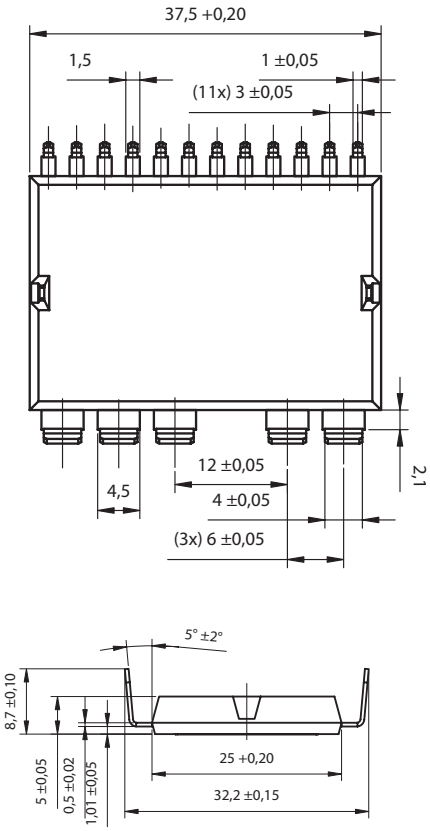

X026c ISOPLUS-DIL (SMD)

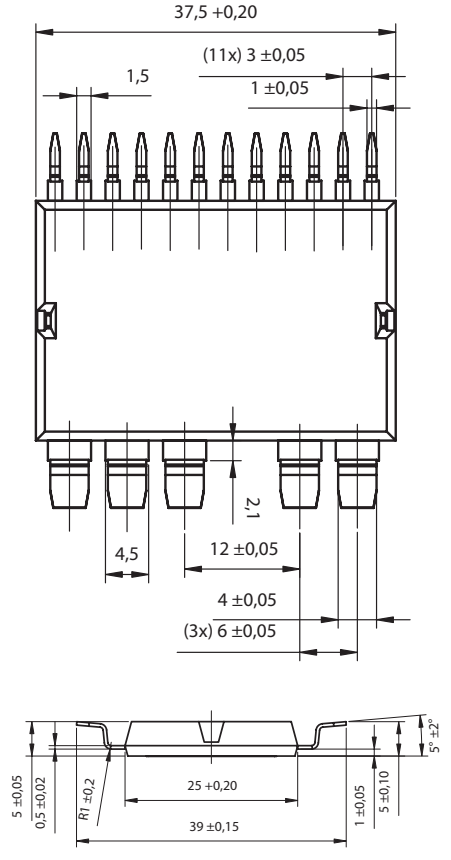

X027a SOT-227 B miniBLOC
X027b SOT-227 UI miniBLOC

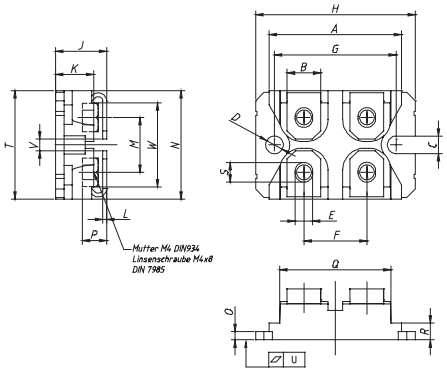

Dim.	Millimeter Min.	Millimeter Max.	Inches Min.	Inches Max.
A	31.50	31.88	1.240	1.255
B	7.80	8.20	.307	.323
C	4.09	4.29	.161	.169
D	4.09	4.29	.161	.169
E	4.09	4.29	.161	.169
F	14.91	15.11	.587	.595
G	30.12	30.30	1.186	1.193
H	37.80	38.23	1.489	1.505
J	11.68	12.22	.460	.481
K	8.92	9.60	.351	.378
L	0.76	0.84	.030	.033
M	12.60	12.85	.496	.506
N	25.15	25.42	.990	1.001
0	1.98	2.13	0.78	.084
P	4.95	5.97	.195	.235
Q	26.54	26.90	1.045	1.059
R	3.94	4.42	.155	.174
S	4.72	4.85	.186	.191
T	24.59	25.07	.968	.987
U	-0.05	0.10	-.002	.004
V	3.30	4.57	.130	.180
W	19.81	21.08	.780	.830

IXYS

Dimensions in mm and inches (1 mm = 0.0394")

X028 ISOPLUS227™

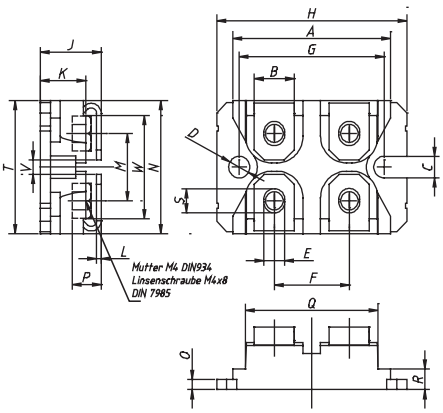

SYM	INCHES		MILLIMETERS	
	MIN	MAX	MIN	MAX
A	1.240	1.270	31.50	32.26
B	.310	.330	7.87	8.38
C	.155	.165	3.94	4.19
D	.155	.165	3.94	4.19
D1	.150	.157	3.81	3.98
E	.160	.168	4.06	4.27
F	.587	.595	14.91	15.11
G	1.186	1.193	30.12	30.30
H	1.489	1.505	37.80	38.23
J	.465	.481	11.81	12.22
K	.370	.380	9.40	9.65
L	.030	.033	0.76	0.84
M	.496	.506	12.60	12.85
N	.990	1.001	25.15	25.42
O	.100	.105	2.54	2.67
P	.195	.235	4.95	5.97
Q	1.045	1.059	26.54	26.90
R	.160	.170	4.06	4.32
S	.186	.191	4.72	4.85
T	.968	.987	24.59	25.07
U	-.001	.002	-0.03	0.05
V	.130	.160	3.30	4.06
W	.780	.830	19.81	21.08
X	.770	.810	19.56	20.57
Y	.680	.720	17.27	18.29
Z	.885	.892	22.48	22.66

X100 Slim-PAC

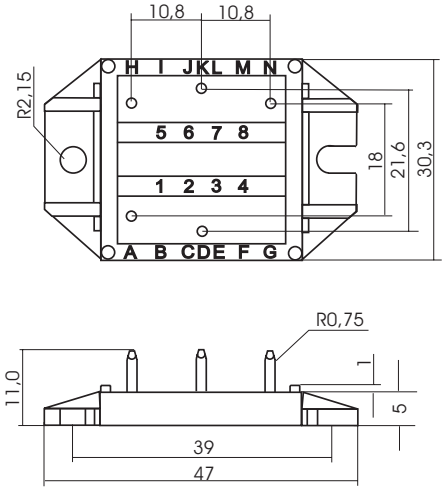

See data sheet for pin arrangement

X101 ECO-PAC1

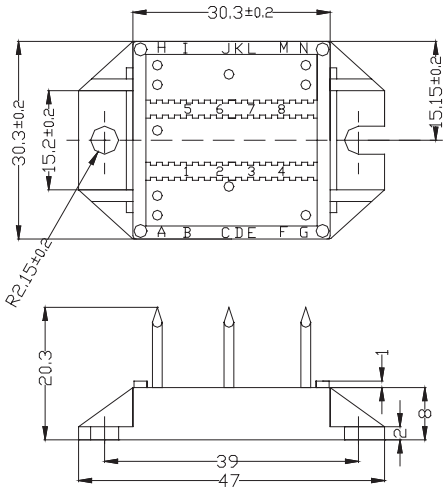

See data sheet for pin arrangement

X102 ECO-PAC2

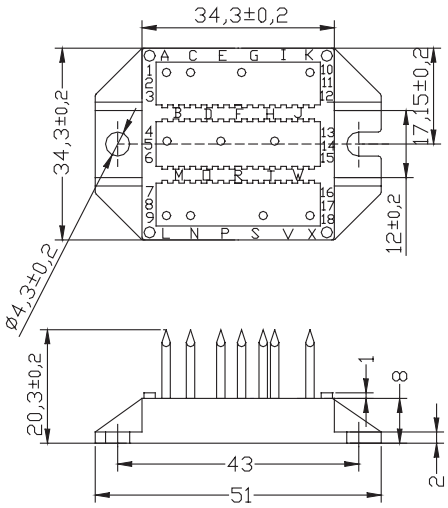

See data sheet for pin arrangement

X103 V1-A-Pack

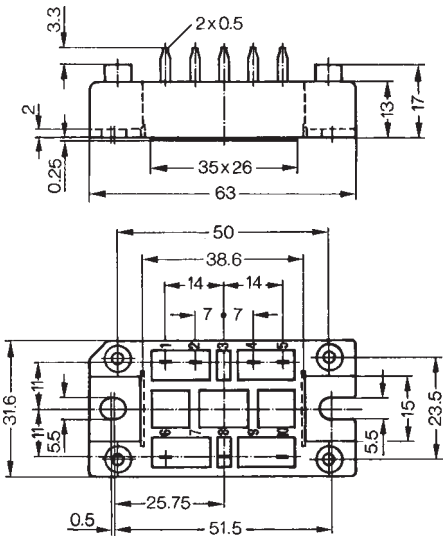

See data sheet for pin arrangement

X104 V2-Pack

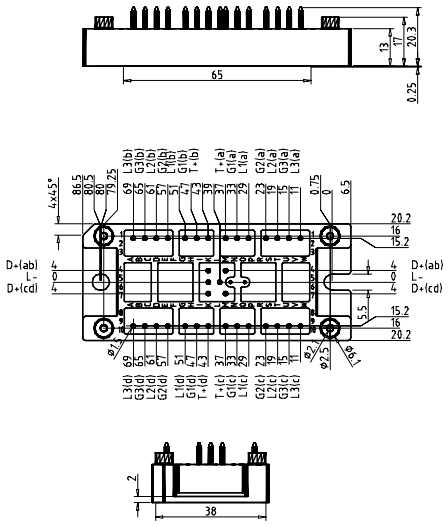

See data sheet for pin arrangement

Dimensions in mm and inches (1 mm = 0.0394")

X105 V1-B-Pack
a: pin length = 31 mm
b: pin length = 15 mm

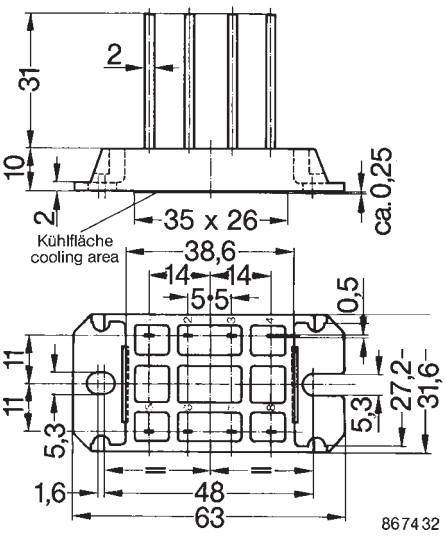

X106 Kamm-Modul
a: with gate pin G2
b: without gate pin G2

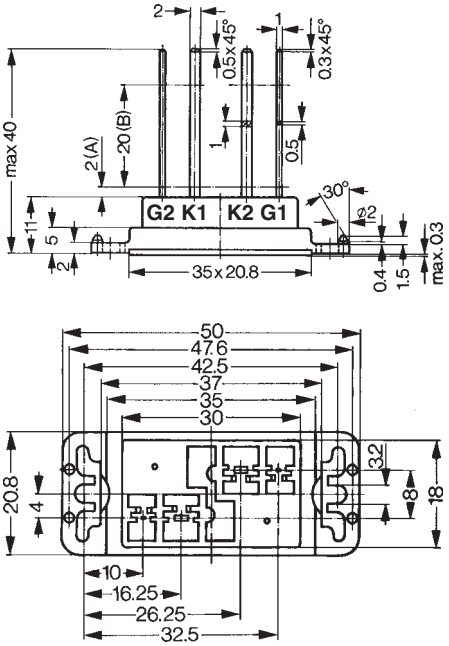

X110 Mini-Pack

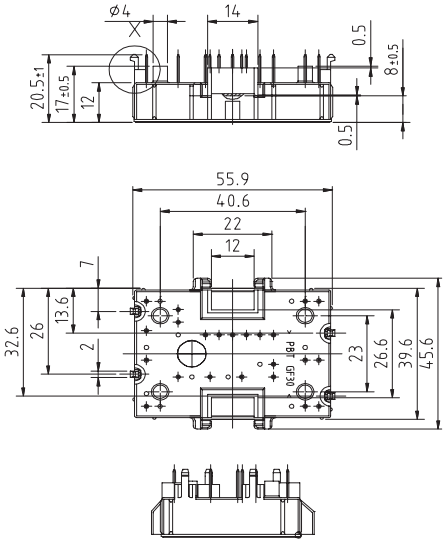

See data sheet for pin arrangement

X111 E1-Pack

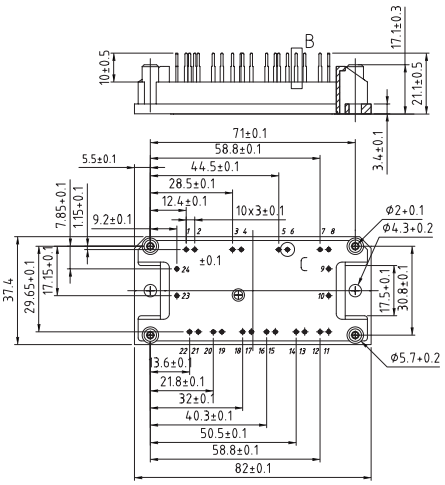

See data sheet for pin arrangement

X112 E2 package

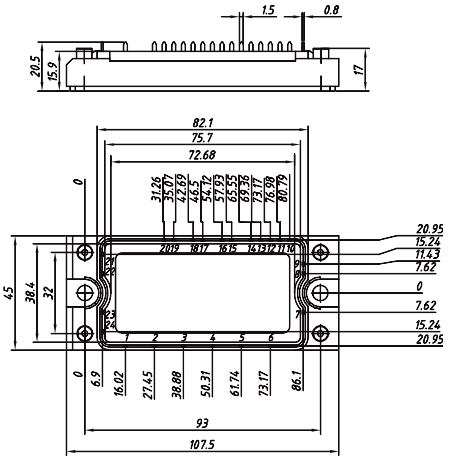

X113 E3 package

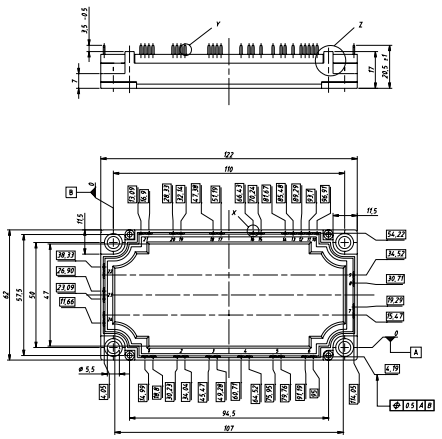

Dimensions in mm and inches (1 mm = 0.0394")

X114 E9-Pack

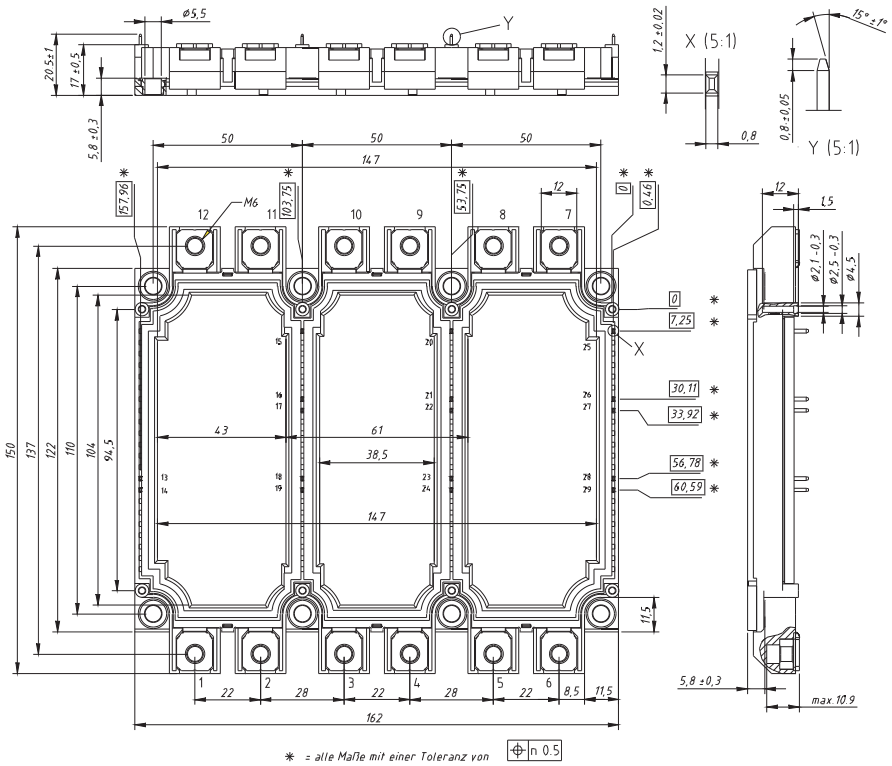

X115 FO-A

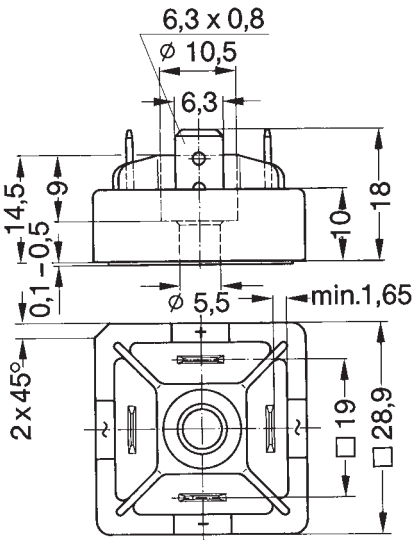

X116a FO-B-A

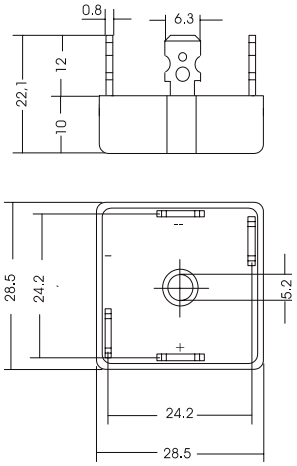

X116b FO-B-B

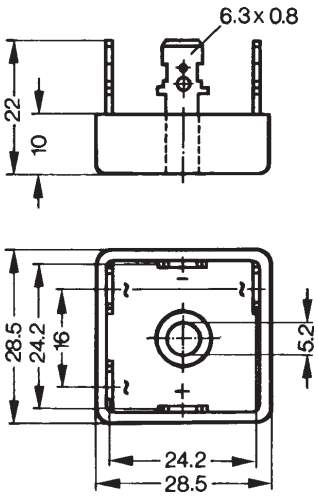

X117a FO-F-A

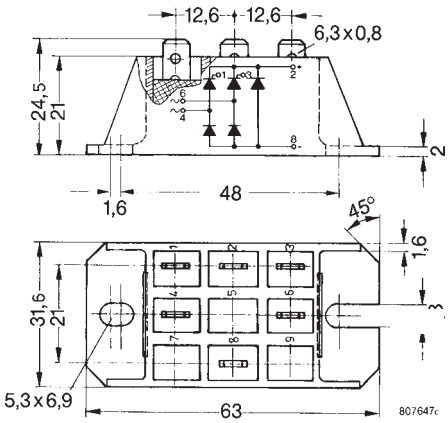

Dimensions in mm and inches (1 mm = 0.0394")

X117b FO-F-B

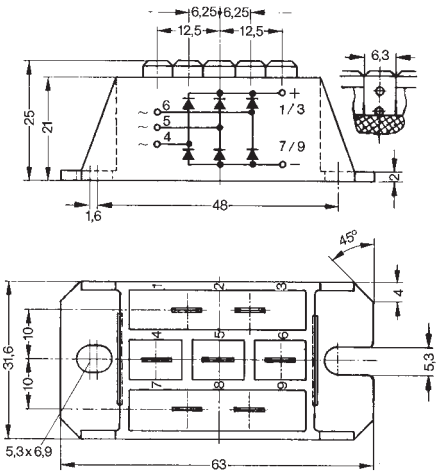

X118a FO-T-A

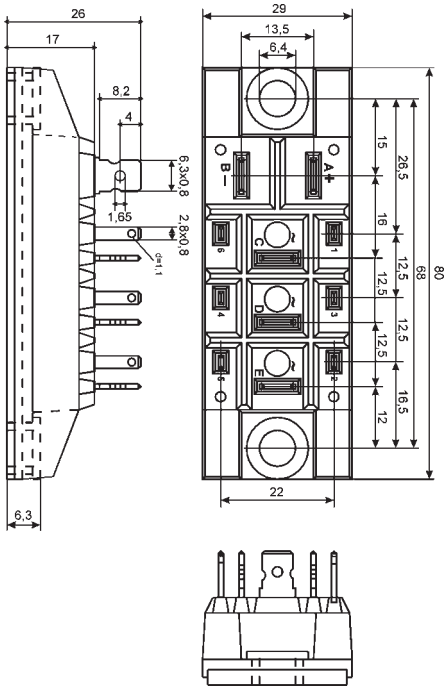

See data sheet for pin arrangement

X118b FO-T-B

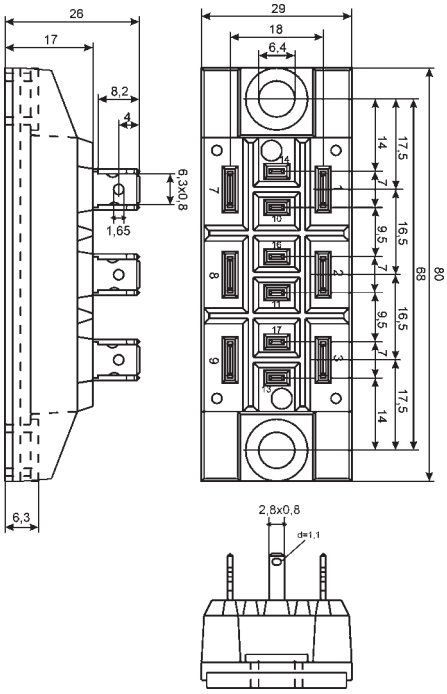

See data sheet for pin arrangement

X119 PWS-A

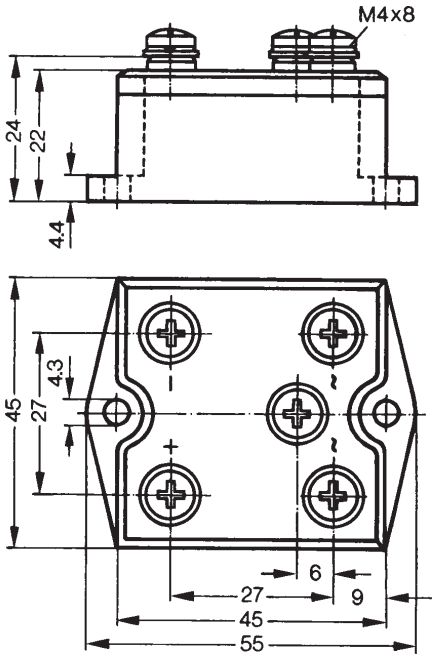

X120 PWS-B

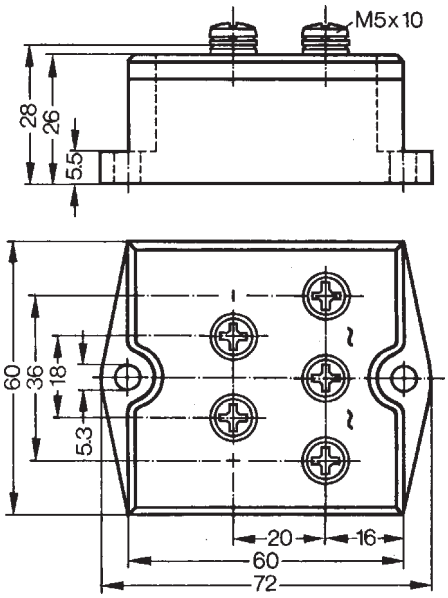

X121 PWS-B

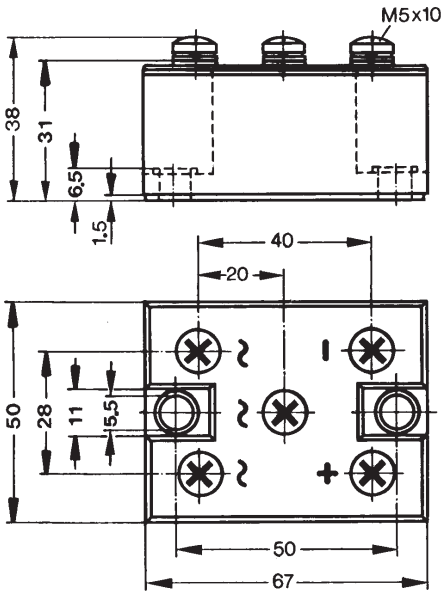

IXYS

Dimensions in mm and inches (1 mm = 0.0394")

X122 PWS-D

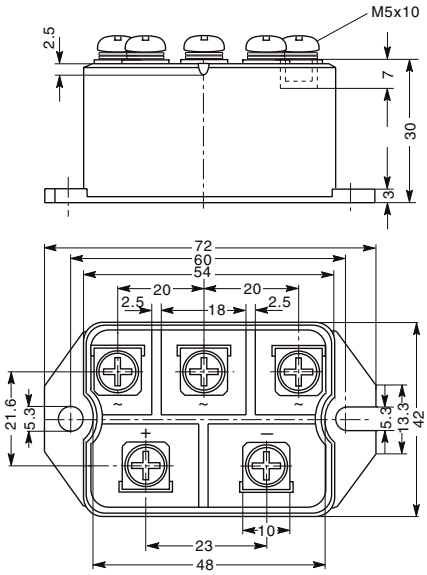

X123a PWS-E-1

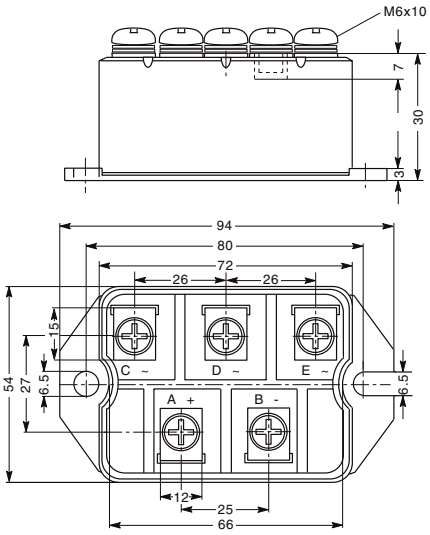

X123b PWS-E-2

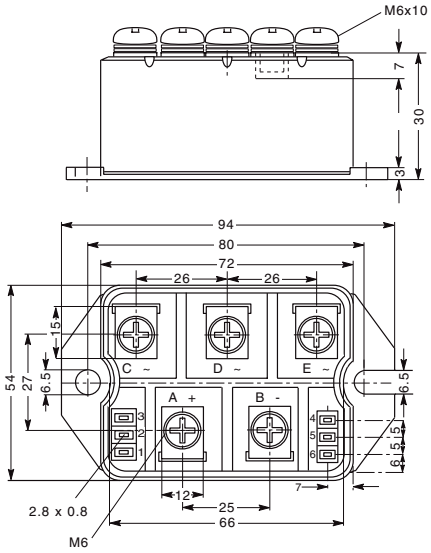

X124 PWS-F

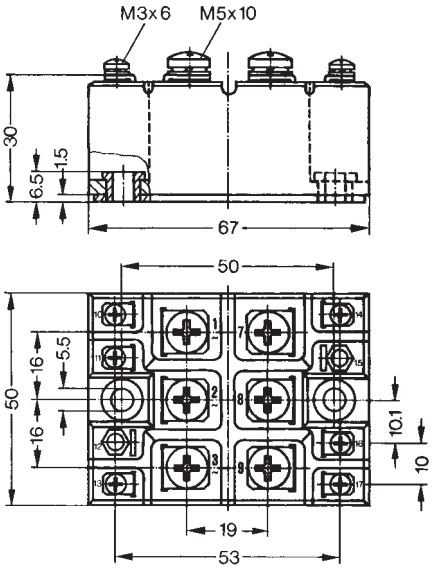

X125 TO-240 AA

a: (+ Kelvin contact (MCC))
b: (+ Kelvin contact, w/o pin 6 & 7 (MCD))
c: (w/o Kelvin contact 4 & 7 (MCC))
d: (w/o Kelvin contact 4, 7 & pin 6 (MCD))
e: (w/o pin 4, 5, 6 & 7 (MDD))

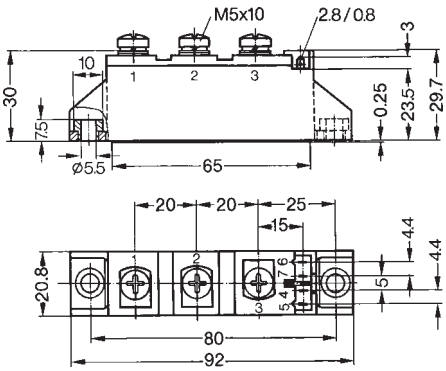

See data sheet for pin arrangement

X126 Y4-M6

a: (+ Kelvin contact (MCC))
b: (+ Kelvin contact, w/o pin 6 & 7 (MCD))
c: (w/o pin 4, 5, 6 & 7 (MDD))
d: (w/o terminal 2 (MEO))

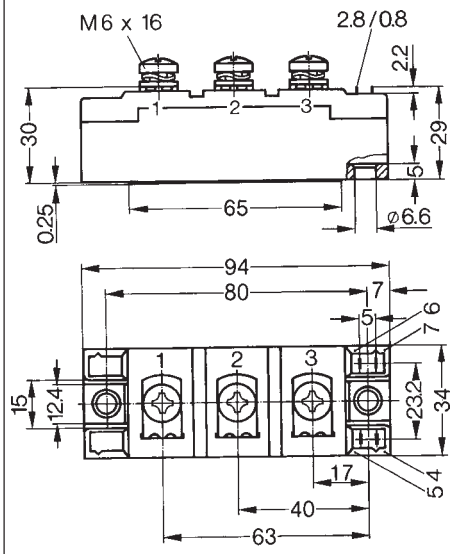

IXYS

Dimensions in mm and inches (1 mm = 0.0394")

X127 Y4-M5
a: (MII)
b: (w/o pin 6 & 7 (MID))
c: (w/o pin 4 & 5 (MDI))

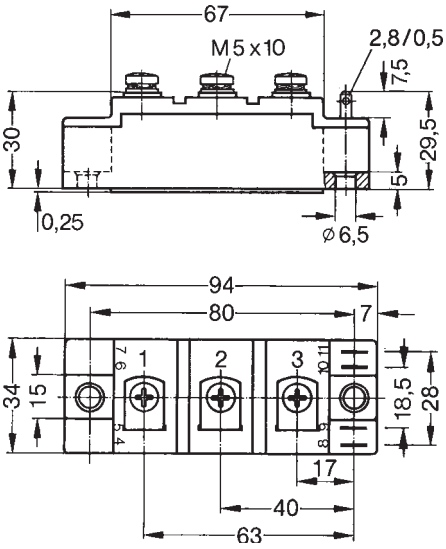

X128 Y3-DCB
a: (MII)
b: (w/o pin 8 & 9 (MID))
c: (w/o pin 10 & 11 (MDI))
d: (w/o terminal 3 (VMO))

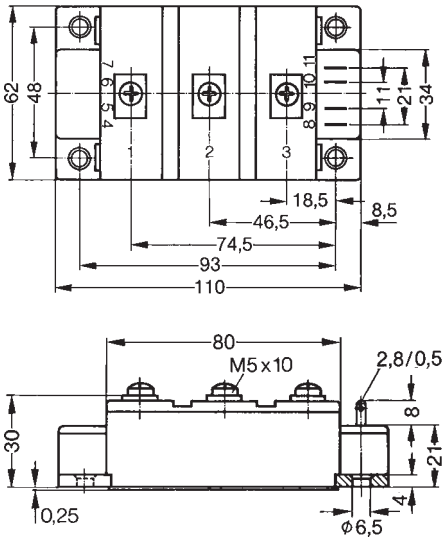

X129 Y2-DCB
a: (+ Kelvin contact (MCC))
b: (+ Kelvin contact, w/o pin 6 & 7 (MCD))
c: (w/o pin 4, 5, 6 & 7 (MDD))

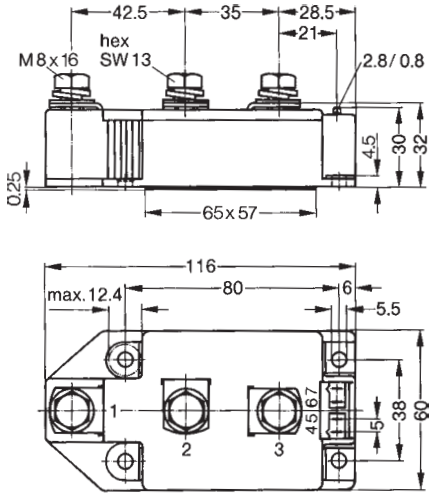

X130 Y3-Li
a: (low inductance (VMM, MII))
b: (w/o pin 8 & 9, low inductance (MID))
c: (w/o pin 10 & 11, low inductance (MDI))
d: (w/o terminal 1, low inductance (VMO))

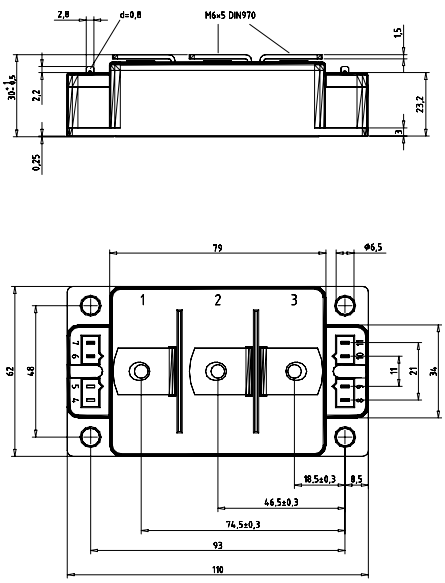

X131 Y1-CU
a: (+ Kelvin contact (MCC))
b: (+ Kelvin contact, w/o pin 6 & 7 (MCD))
c: (w/o pin 4, 5, 6 & 7 (MDD))

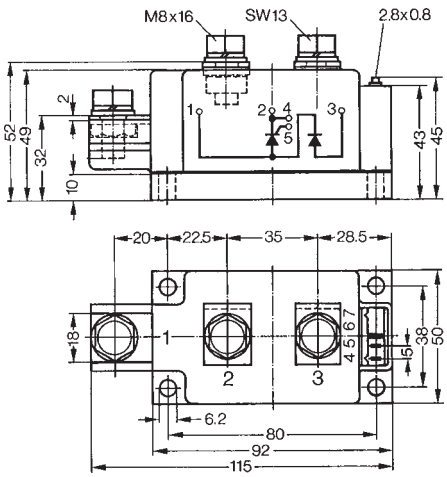

X132 Y1-2-CU
a: (+ Kelvin contact (MCO))
b: (w/o pin 4 & 5 (MDO))

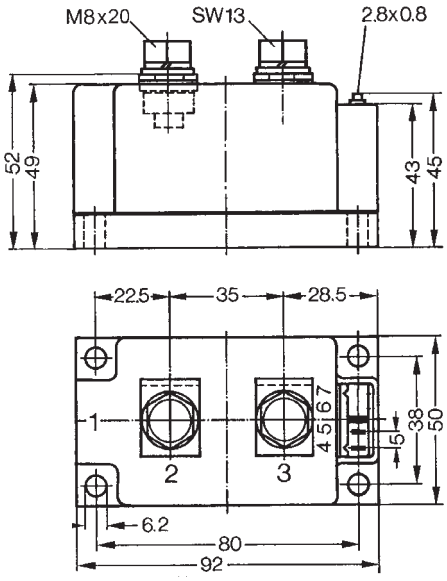

Dimensions in mm and inches (1 mm = 0.0394")

X133 Y1-wc (+ water-cooler, HVL)

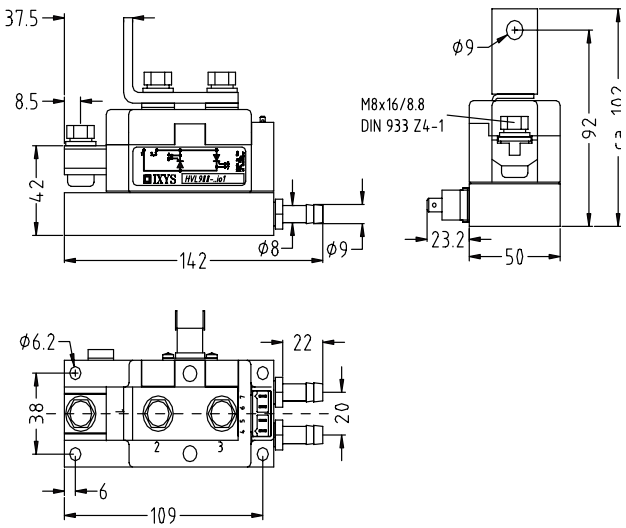

X134 E10-Pack

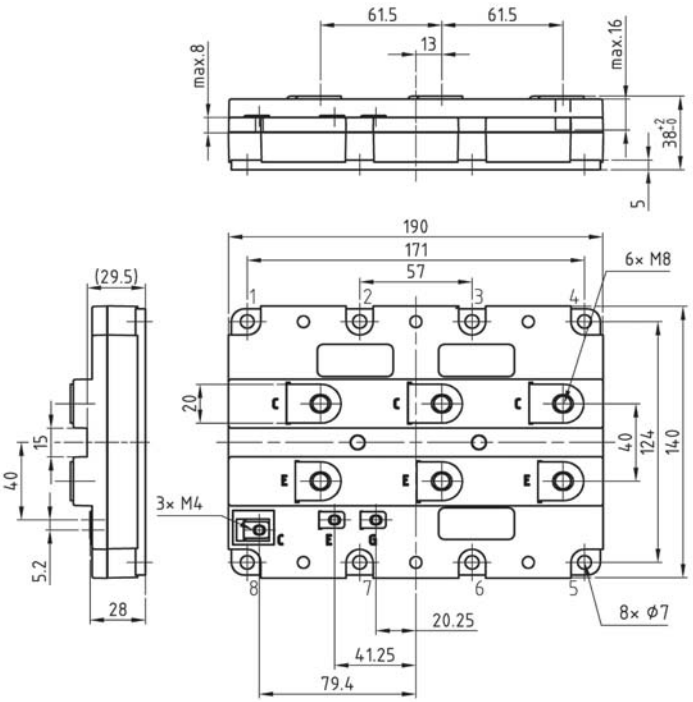

X135 E11-Pack

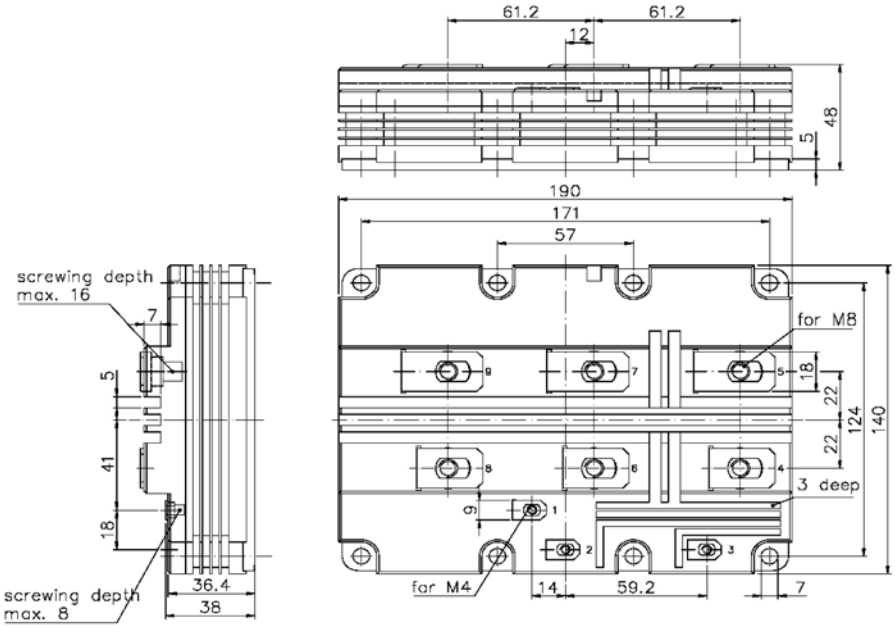

Dimensions in mm and inches (1 mm = 0.0394")

X136a WC-500

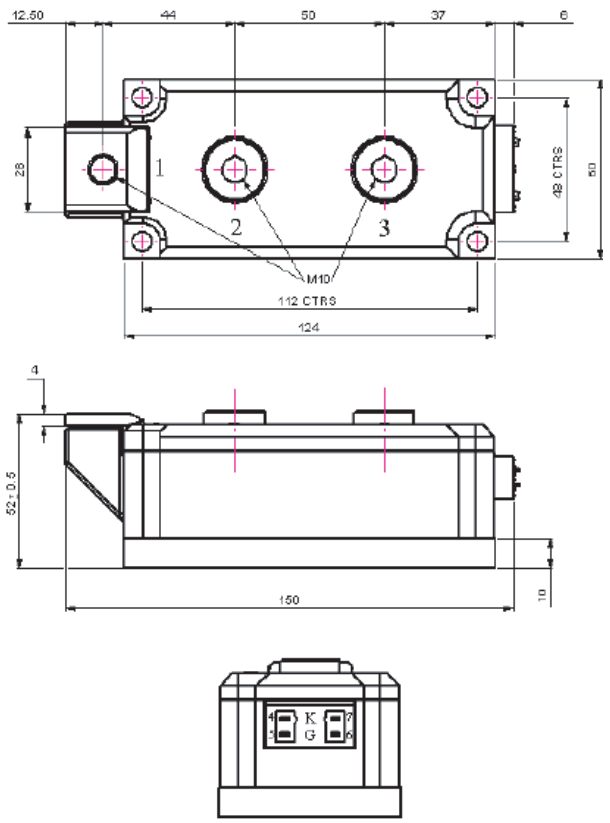

X136b WC-500 wc

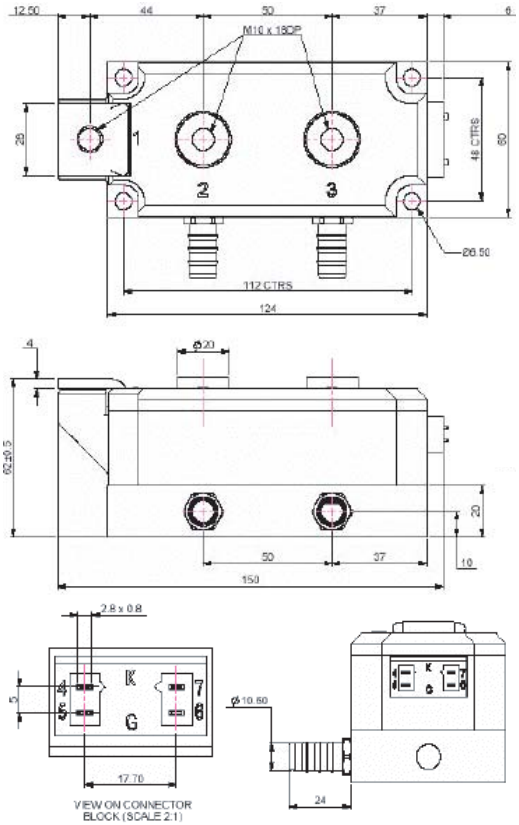

X200 Metal-can

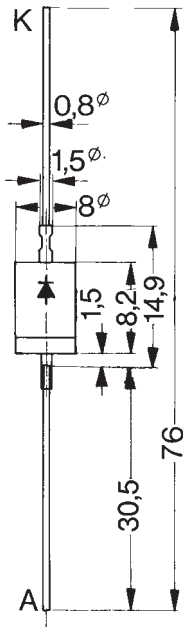

X201 FP-Case (oilproof)

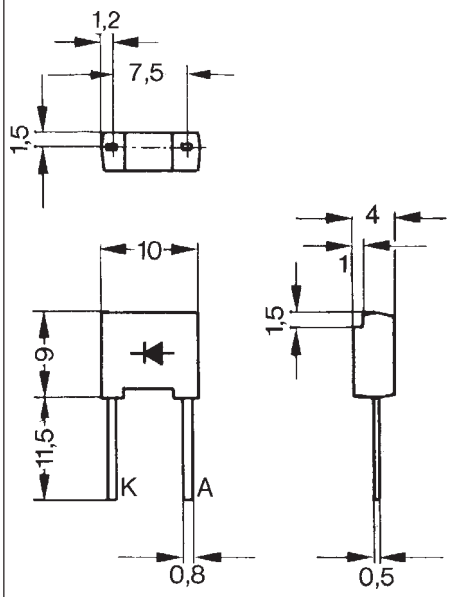

X202 BOD-Package

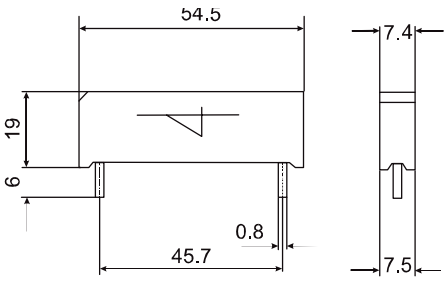

IXYS

Dimensions in mm and inches (1 mm = 0.0394")

X203 TO-204 AE

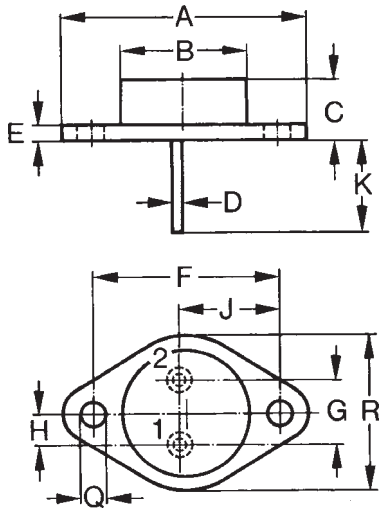

Dim.	Millimeter Min.	Millimeter Max.	Inches Min.	Inches Max.
A	38.61	39.12	1.520	1.540
B	-	22.22	-	0.875
C	6.40	11.40	0.252	0.449
D	1.45	1.60	0.057	0.063
E	1.52	3.43	0.060	0.135
F	30.15	BSC	1.187	BSC
G	10.67	11.17	0.420	0.440
H	5.21	5.71	0.205	0.225
J	16.64	17.14	0.655	0.675
K	11.18	12.19	0.440	0.480
Q	3.84	4.19	0.151	0.165
R	25.16	26.66	0.991	1.050

X204 DO-203 AA [M] (DO-4)

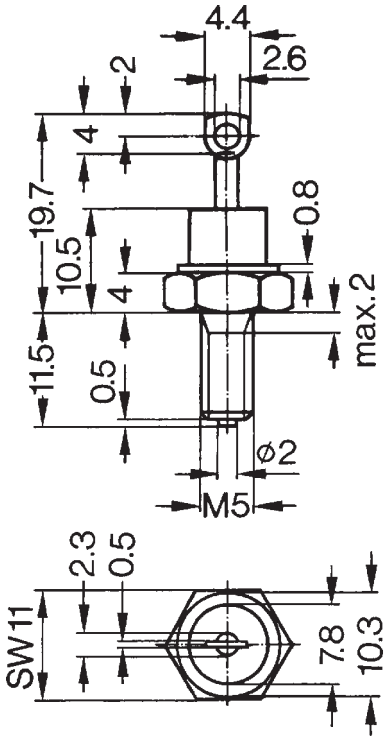

X205 DO-203 AA [UNF] (DO-4)

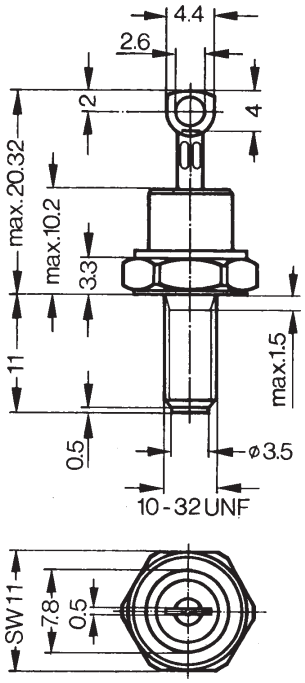

X206a DO-203 AB [UNF] (DO-5)
X206b DO-203 AB [M] (DO-5)

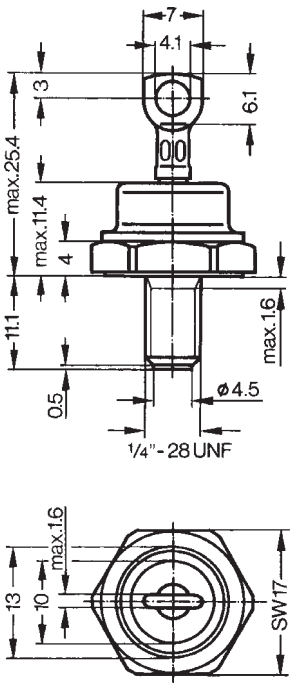

X207 DO-203 AB (DO-5)

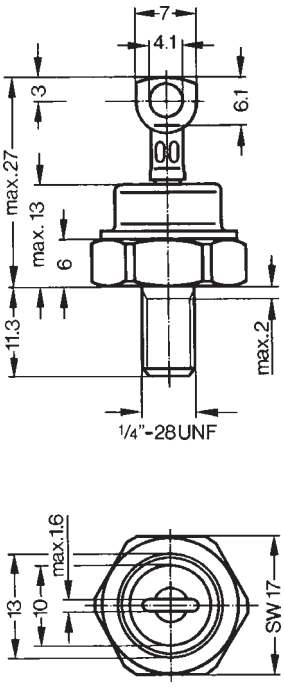

X208 TO-64

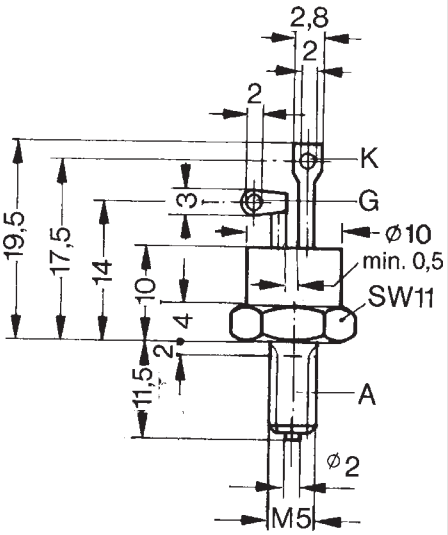

IXYS

Dimensions in mm and inches (1 mm = 0.0394")

X209 TO-208 AA (TO-48)

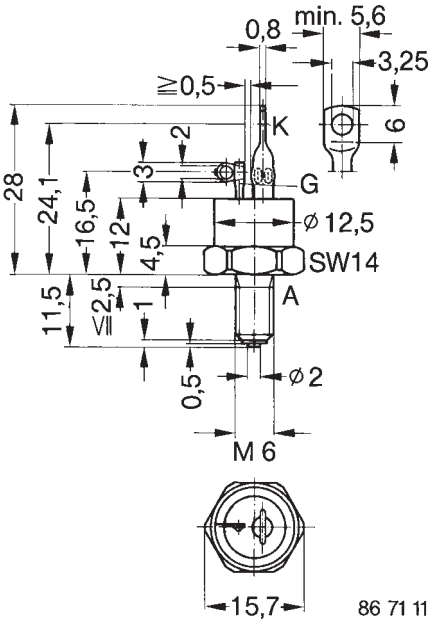

X210 TO-208 AC (TO-65)

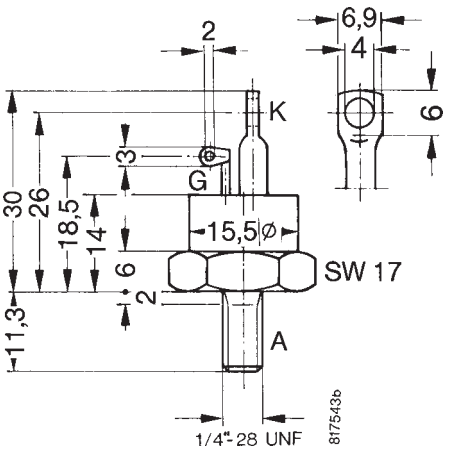

X250a-g HTZ

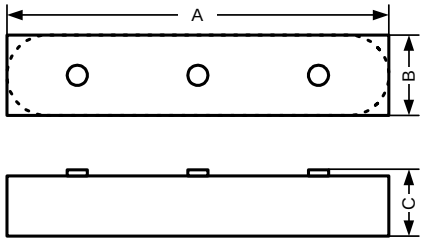

Type	A	B	C
a: HTZ 110	368	48	48
a: HTZ 120	368	48	48
b: HTZ 130	201	32	31
c: HTZ 150	130	32	31
c: HTZ 160	130	32	31
c: HTZ 170	130	32	31
d: HTZ 180	264	32	32
e: HTZ 240	166	27	21
f: HTZ 250	306	65	47
f: HTZ 260	306	65	47
g: HTZ 270	382	64	47
g: HTZ 280	382	64	47

all dimension in mm

other dimensions see datasheet

X251 UGE-single

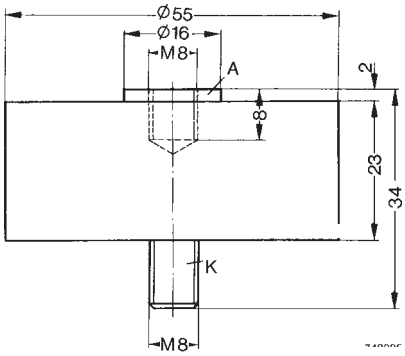

X252 UGB 1~

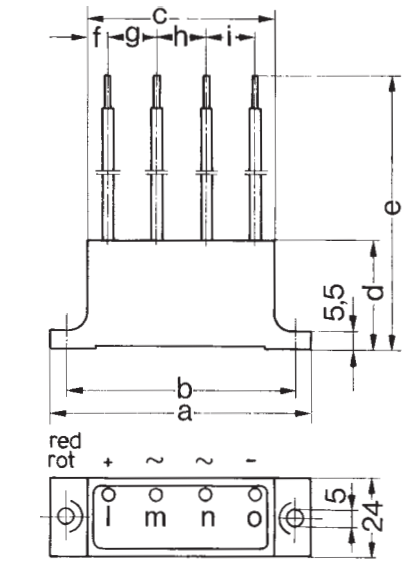

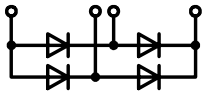

UGB 3132 AD
UGB 6124 AG

X253 UGD 3~

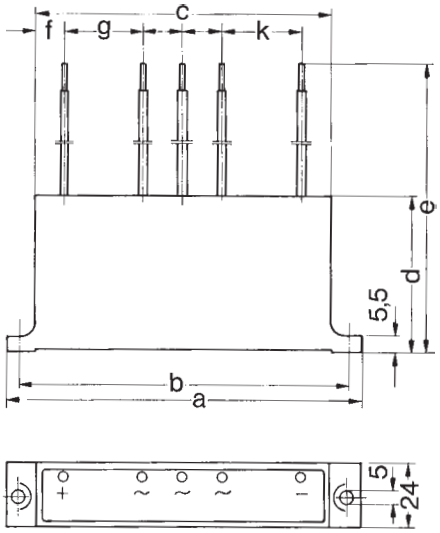

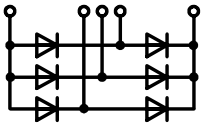

UGD 6123 AG
UGD 8124 AG

Type	a	b	c	d	e	f	g	h	i	k
UGB 3132 AD	80	70	57	58.5	260	6	15	15	15	
UGB 6124 AG	135	125	112	58.5	260	11	32.5	25	32.5	
UGB 6123 AG	135	125	112	58.5	260	8	30	18	18	30
UGB 8124 AG	135	125	112	58.5	260	8	30	18	18	30

Dimensions in mm and inches (1 mm = 0.0394")

X254 VG-A

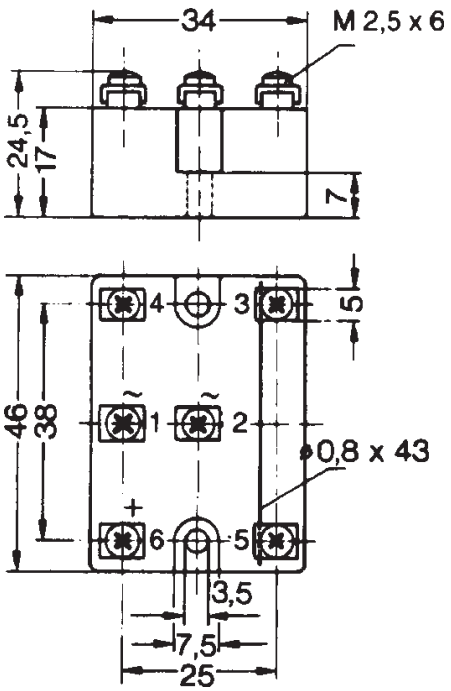

X255 VG-B

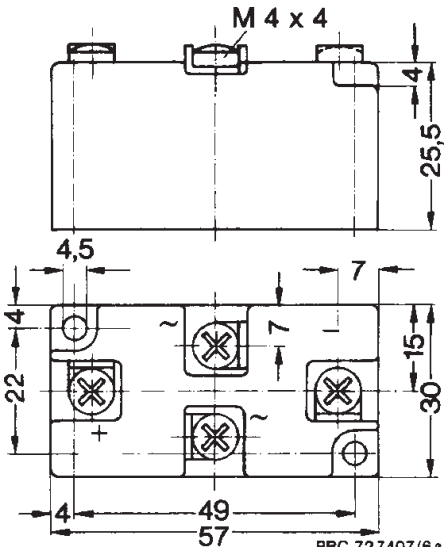

X256 VG-C

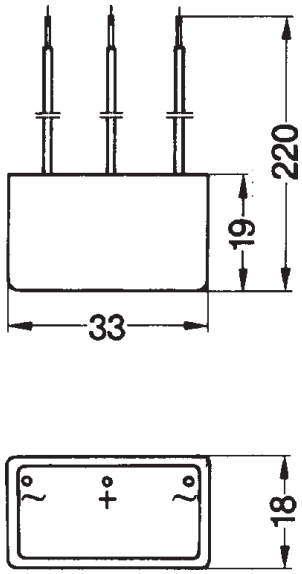

X500 8-Pin P-DIP

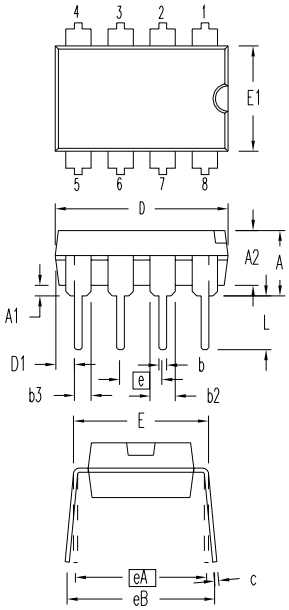

SYM	INCHES		MILLIMETERS	
	MIN	MAX	MIN	MAX
A	.140	.180	3.56	4.57
A1	.015	.040	0.38	1.02
A2	.125	.145	3.18	3.68
b	.015	.020	0.38	0.51
b2	.055	.065	1.40	1.65
b3	.035	.045	0.89	1.14
c	.009	.012	0.23	0.30
D	.355	.400	9.02	10.16
D1	.010	.040	0.25	1.02
E	.300	.325	7.62	8.26
E1	.240	.270	6.10	6.86
e	.100 BSC		2.54 BSC	
eA	.300 BSC		7.62 BSC	
eB	.300	.430	7.62	10.92
L	.120	.140	3.05	3.56

X501 8-Pin SOP

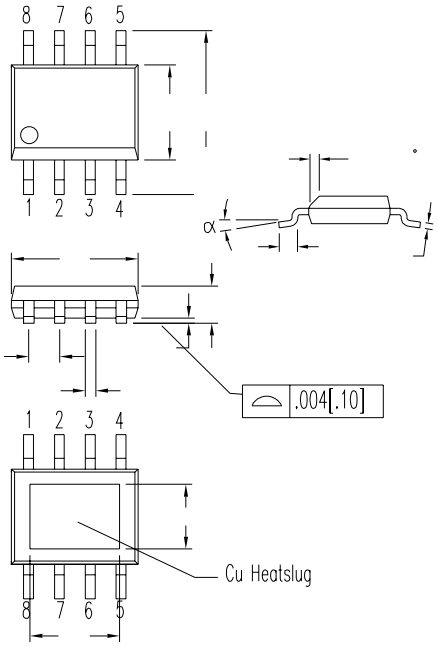

SYM	INCHES		MILLIMETERS	
	MIN	MAX	MIN	MAX
A	.053	.069	1.35	1.75
A1	.004	.010	0.10	0.25
B	.013	.020	0.33	0.51
C	.008	.010	0.19	0.25
D	.189	.197	4.80	5.00
E	.150	.157	3.80	4.00
e	.050 BSC		1.27 BSC	
H	.228	.244	5.80	6.20
h	.010	.020	0.25	0.50
L	.016	.050	0.40	1.27
M	.135	.155	3.43	3.94
N	.095	.115	2.41	2.92
α	0°	8°	0°	8°

X510 10-Pin QFN

IXYS

Dimensions in mm and inches (1 mm = 0.0394")

X520 14-Pin PDIP

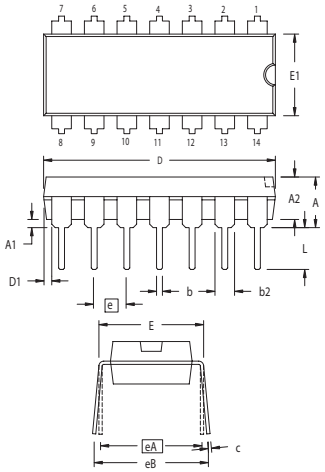

SYM	INCHES		MILLIMETERS	
	MIN	MAX	MIN	MAX
A	.140	.180	3.56	4.57
A1	.015	.040	0.38	1.02
A2	.125	.145	3.18	3.68
b	.015	.020	0.38	0.51
b2	.055	.065	1.40	1.65
c	.009	.012	0.23	0.30
D	.735	.775	18.67	19.69
D1	.005	.040	0.13	1.02
E	.300	.325	7.62	8.26
E1	.240	.270	6.10	6.86
e	.100 BSC		2.54 BSC	
eA	.300 BSC		7.62 BSC	
eB	.300	.430	7.62	10.92
L	.120	.140	3.05	3.56

NOTE: THIS DRAWING MEETS ALL REQUIREMENT OF JEDEC OUTLINES MS-001 AA.

X521 14-Pin SOP

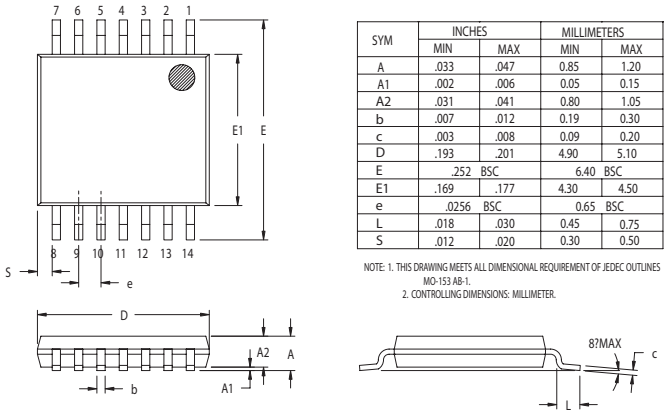

SYM	INCHES		MILLIMETERS	
	MIN	MAX	MIN	MAX
A	.033	.047	0.85	1.20
A1	.002	.006	0.05	0.15
A2	.031	.041	0.80	1.05
b	.007	.012	0.19	0.30
c	.003	.008	0.09	0.20
D	.193	.201	4.90	5.10
E	.252 BSC		6.40 BSC	
E1	.169	.177	4.30	4.50
e	.0256 BSC		0.65 BSC	
L	.018	.030	0.45	0.75
S	.012	.020	0.30	0.50

NOTE: 1. THIS DRAWING MEETS ALL DIMENSIONAL REQUIREMENT OF JEDEC OUTLINES MO-153 AB-1.
2. CONTROLLING DIMENSIONS: MILLIMETER.

X530 16-Pin PDIP

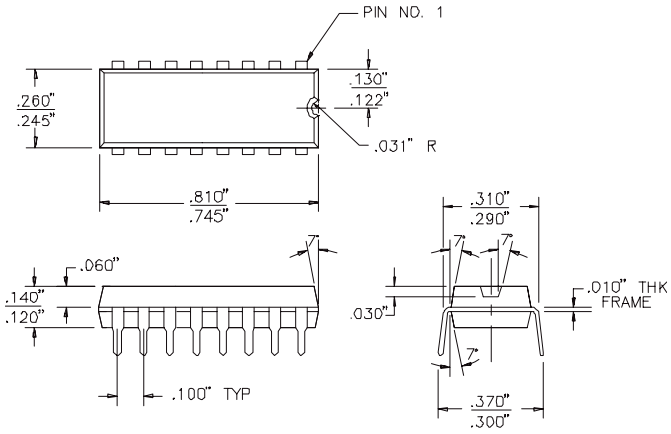

X531 16-Pin SOP

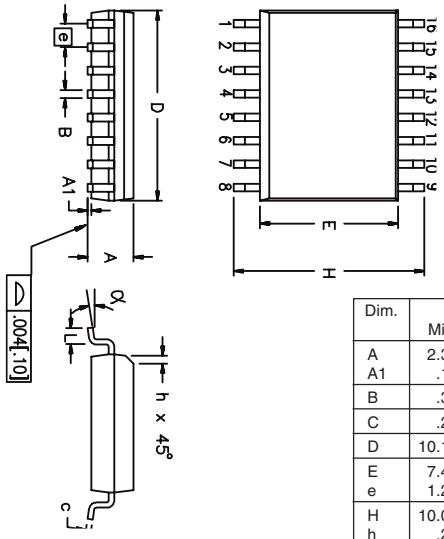

Dim.	Millimeter		Inches	
	Min.	Max.	Min.	Max.
A	2.35	2.65	.093	.104
A1	.10	.30	.004	.012
B	.33	.51	.013	.020
C	.23	.32	.009	.013
D	10.10	10.50	.398	.413
E	7.40	7.60	.291	.299
e	1.27	BSC	.050	BSC
H	10.00	10.65	.394	.419
h	.25	.75	.010	.029
L	.40	1.27	.016	.050
a	0°	8°	0°	8°

X540 18-Pin PDIP

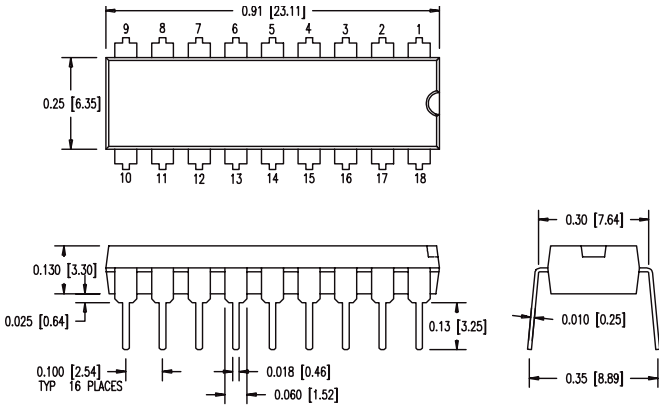

X541 18-Pin SOP

IXYS

Dimensions in mm and inches (1 mm = 0.0394")

X542 18-Pin SOIC-CT

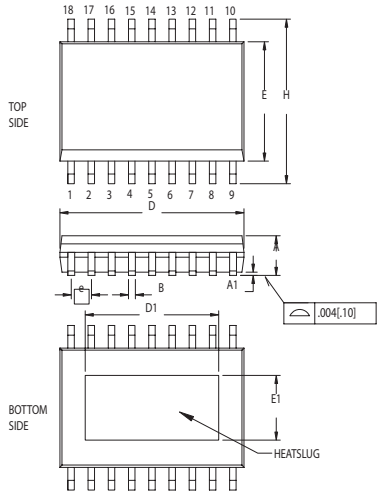

SYM	INCHES		MILLIMETERS	
	MIN	MAX	MIN	MAX
A	.093	.104	2.35	2.65
A1	.004	.012	.10	.30
B	.013	.020	.33	.51
C	.009	.013	.23	.32
D	.447	.462	11.35	11.73
D1	.310	.350	7.87	8.89
E	.291	.299	7.40	7.60
E1	.140	.180	3.56	4.57
e	.050 BSC		1.27 BSC	
H	.394	.419	10.00	10.65
h	.010	.029	.25	.75
L	.016	.050	.40	1.27
α	0°	8°	0°	8°

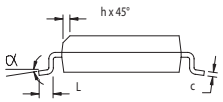

NOTE: This drawing will meet all dimensions requirement of JEDEC MS-013 AB.

X595 48-Pin SSLGA

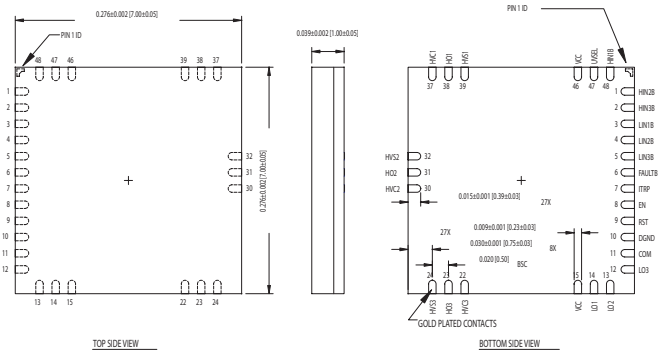

X550 28-Pin SOIC

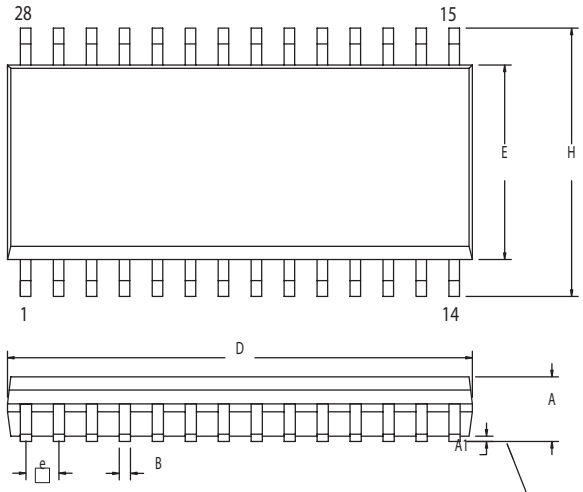

SYM	INCHES		MILLIMETERS	
	MIN	MAX	MIN	MAX
A	.093	.104	2.35	2.65
A1	.004	.012	.10	.30
B	.013	.020	.33	.51
C	.009	.013	.23	.32
D	.697	.713	17.70	18.10
E	.291	.299	7.40	7.60
e	.050 BSC		1.27 BSC	
H	.394	.419	10.00	10.65
h	.010	.029	.25	.75
L	.016	.050	.40	1.27
α	0°	8°	0°	8°

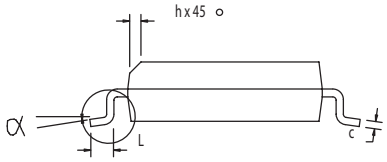

NOTE: This drawing will meet all dimensions requirement of JEDEC MS-013 AE.

X585 44-Pin PLCC

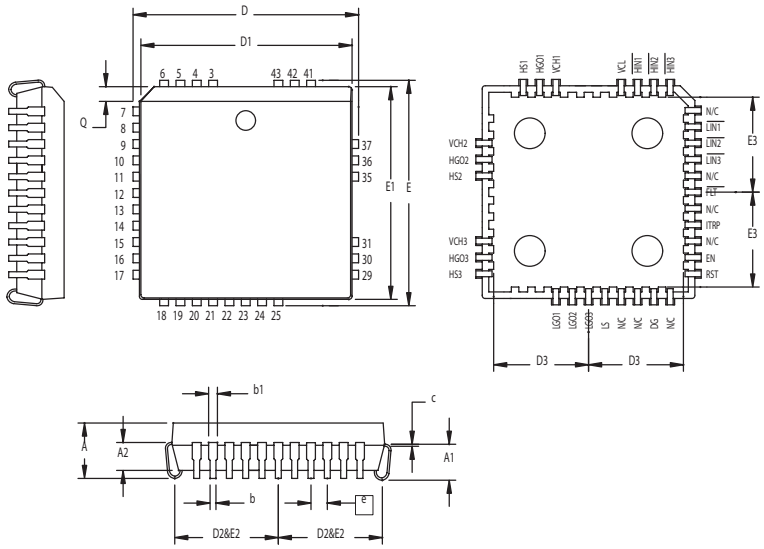

SYM	INCHES		MILLIMETERS	
	MIN	MAX	MIN	MAX
A	.160	.180	4.06	4.57
A1	.100	.120	2.54	3.05
A2	.070	.090	1.78	2.29
b	.015	.022	0.38	0.56
b1	.026	.032	0.66	0.81
c	.018	.023	0.46	0.58
D, E	.685	.695	17.40	17.65
D1,E1	.640	.655	16.26	16.64
D2,E2	.310	.325	7.87	8.26
D3,E3	.280	.300	7.11	7.62
e	.050 BSC		1.27 BSC	
Q	.040	.050	1.02	1.27

NOTE: 1. This drawing will meet all dimensions requirement of JEDEC outline MS018 AC.
2. Leads terminals are Pb-free solder plated.

WESTCODE

Dimensions in mm and inches (1 mm = 0.0394")

W1 - 100A241

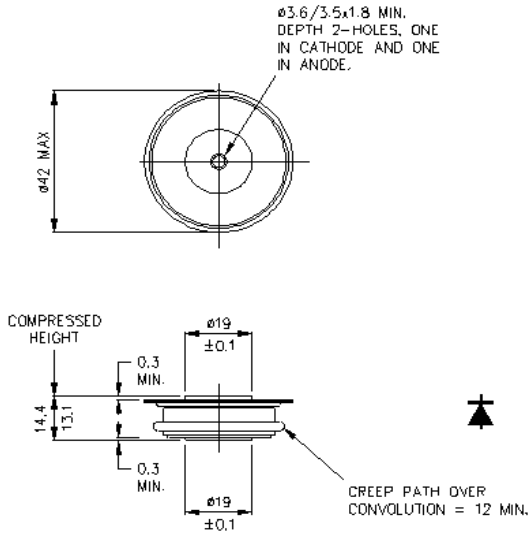

W2 - 100A291

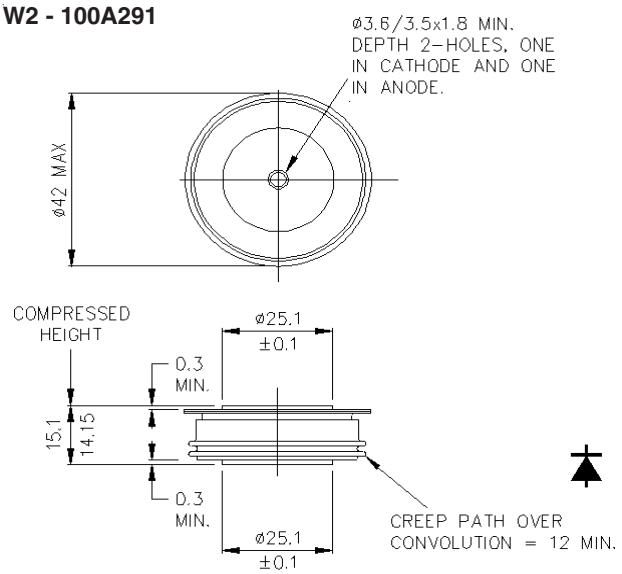

W3 - 100A317

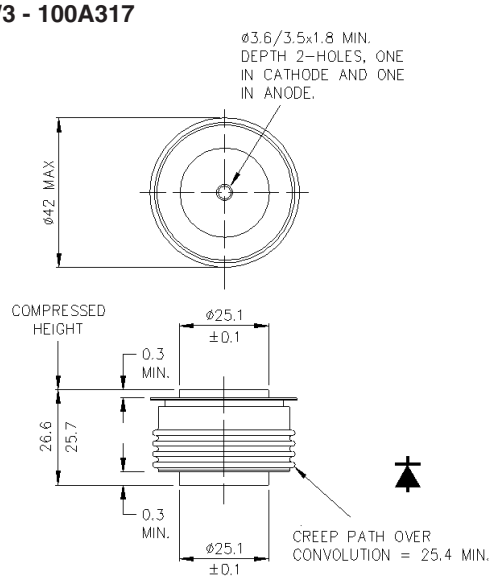

W4 - 100A243

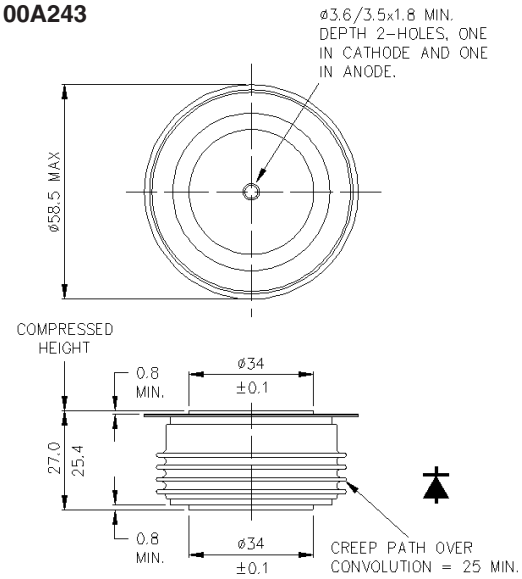

W5 - 100A249

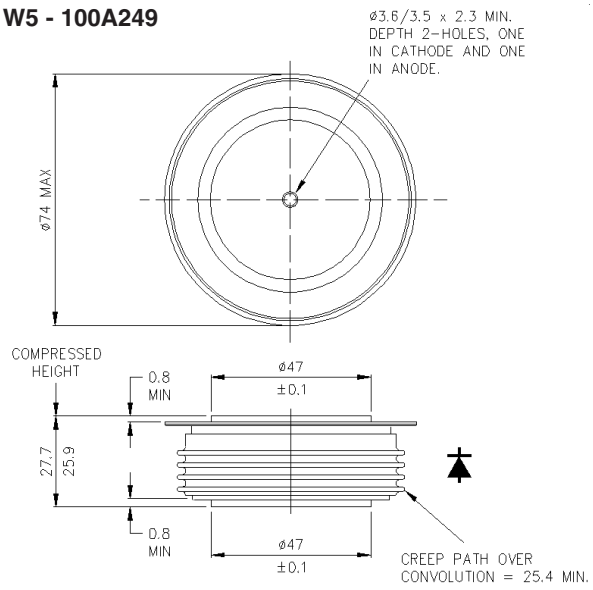

W6 - 100A270

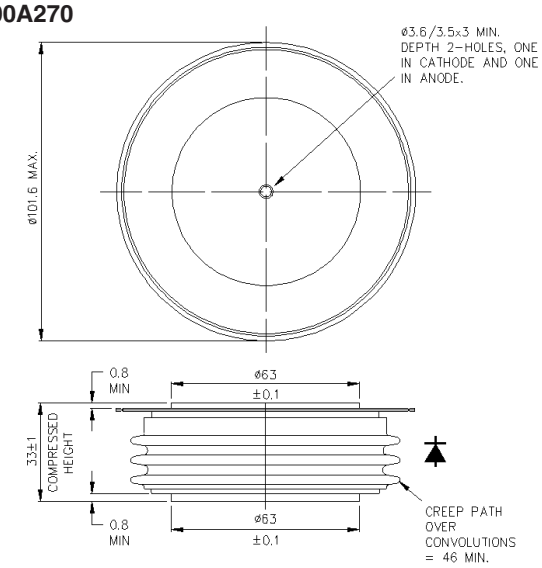

WESTCODE

Dimensions in mm and inches (1 mm = 0.0394")

W7 - 100A293

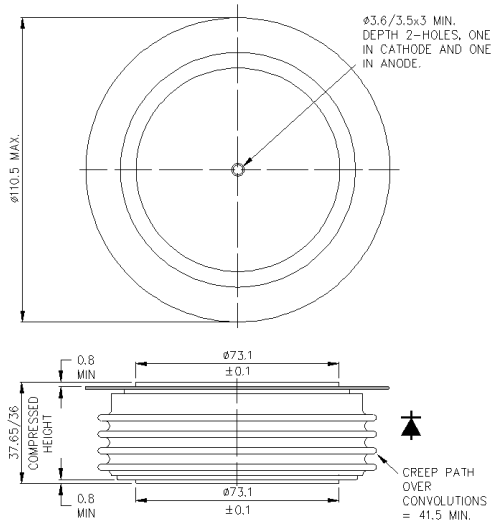

W8 - 101A212

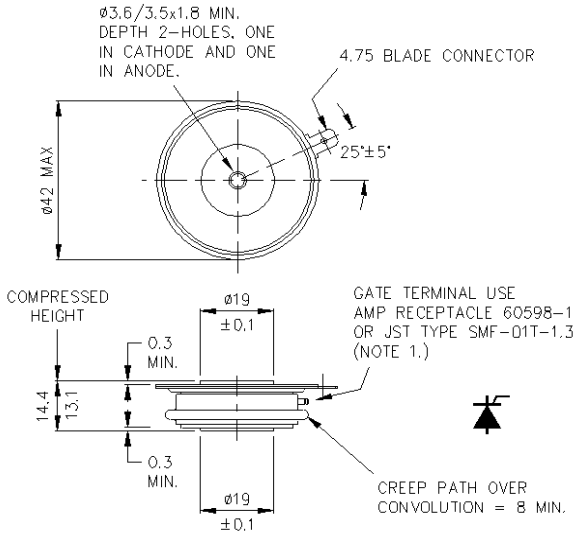

W9 - 101A335

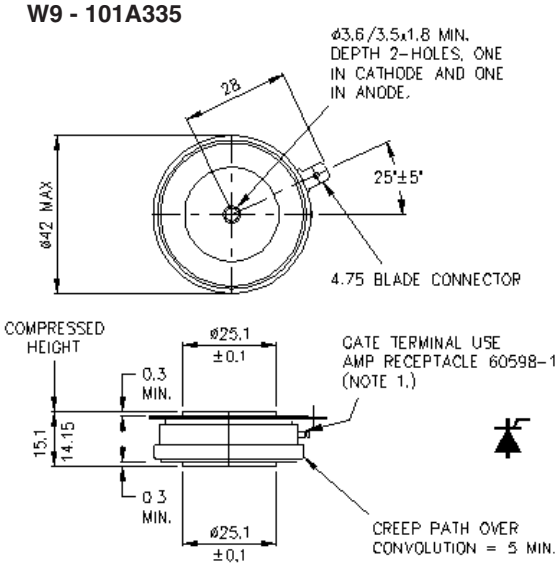

W10 - 101A216

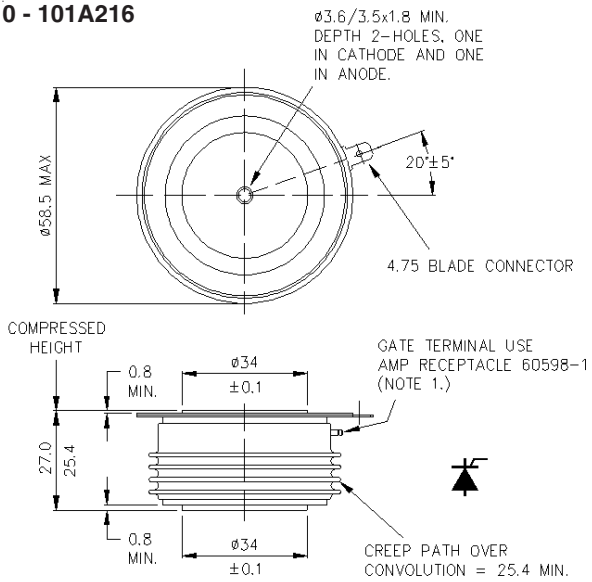

W10a - 101A336

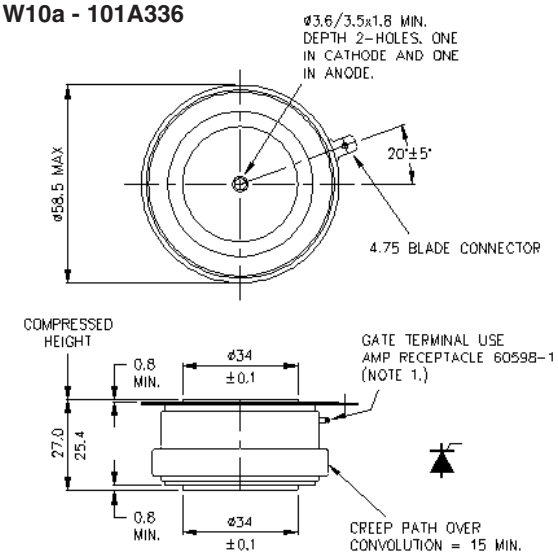

W11 - 101A223

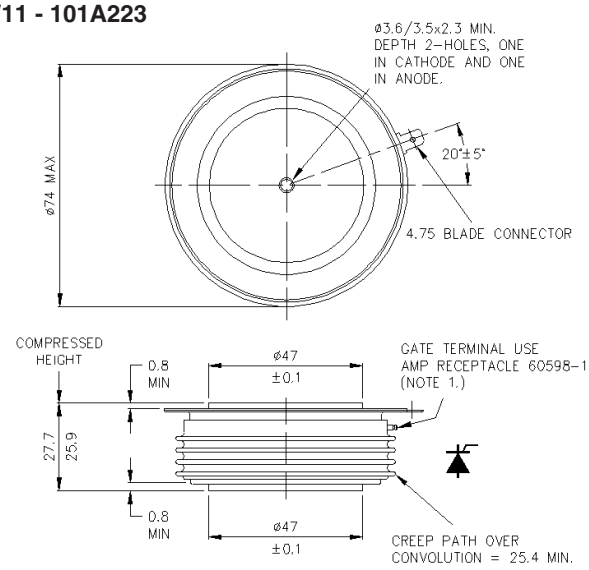

WESTCODE

Dimensions in mm and inches (1 mm = 0.0394")

W11a - 101A337

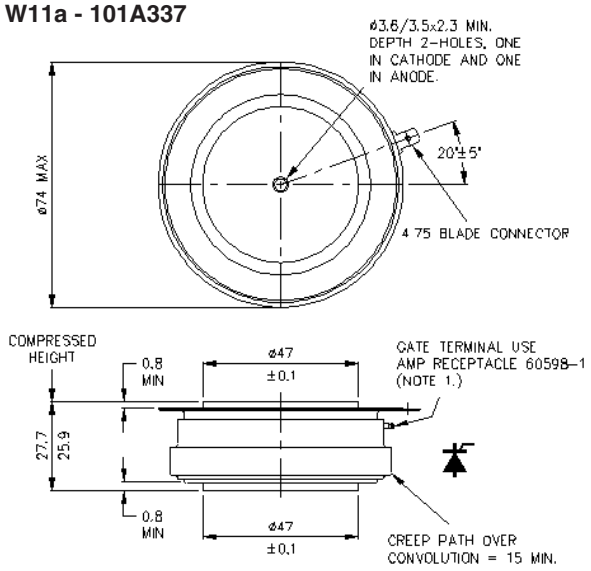

W12 - 101A232

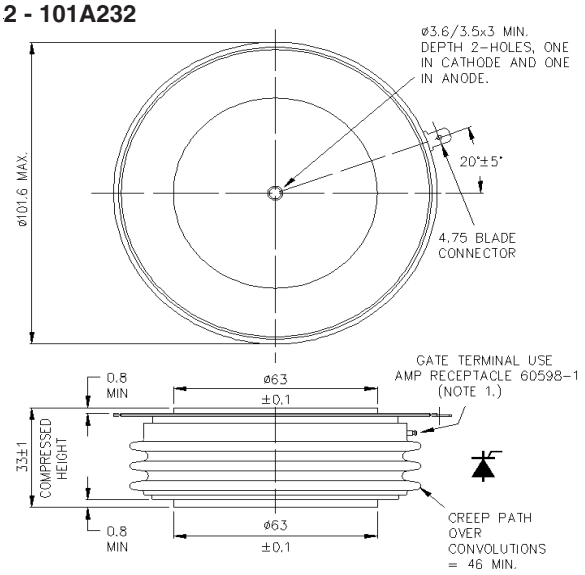

W12a - 101A314

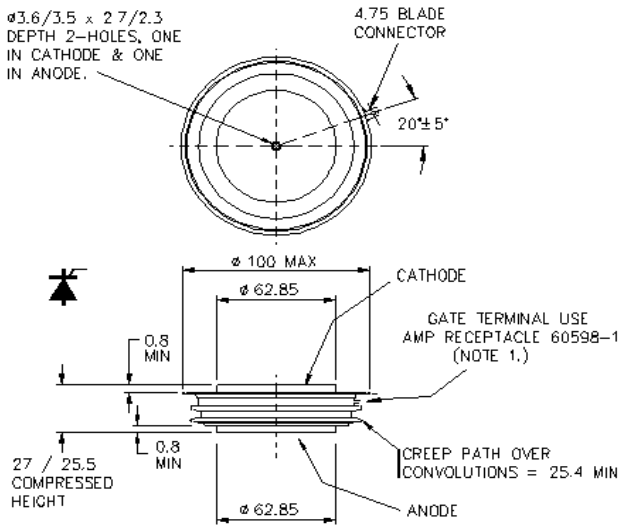

W13 - 101A281

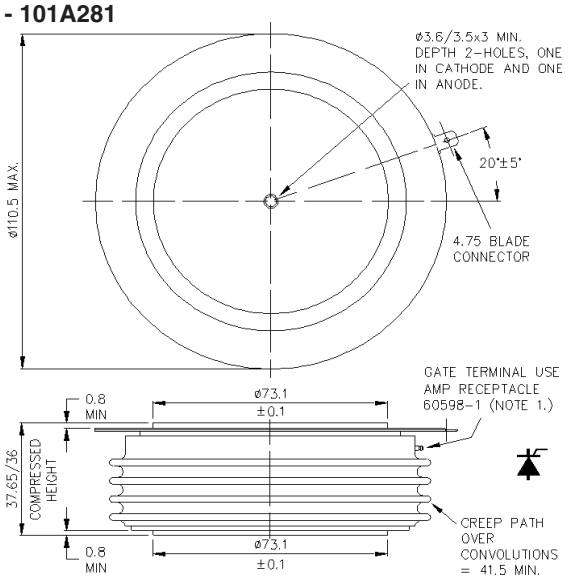

W14 - 101A325

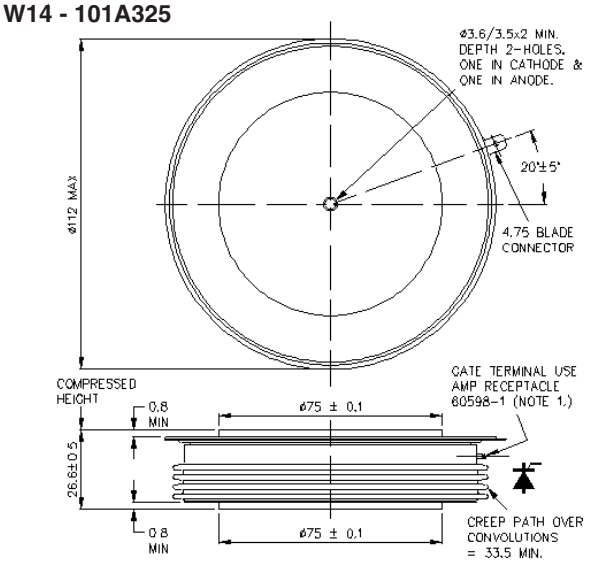

W15 - 101A322

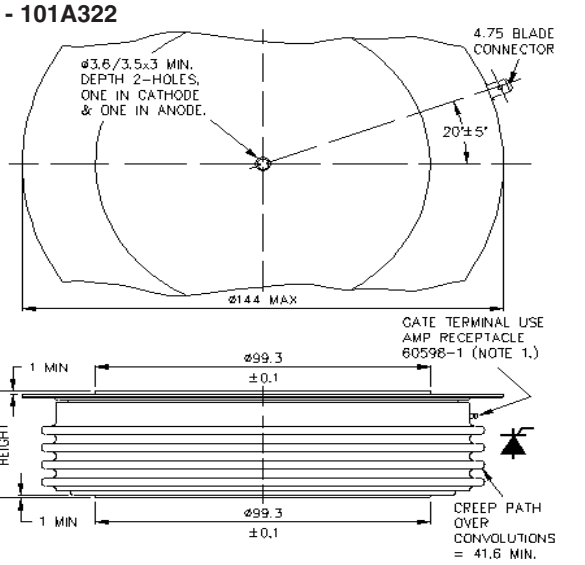

WESTCODE

Dimensions in mm and inches (1 mm = 0.0394")

W16 - 101A235

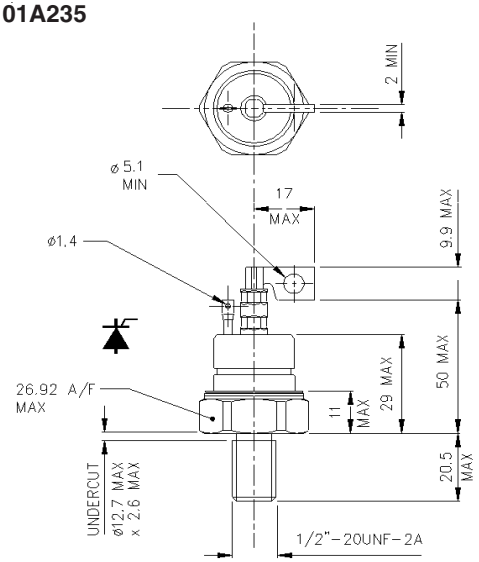

W17 - 101A231

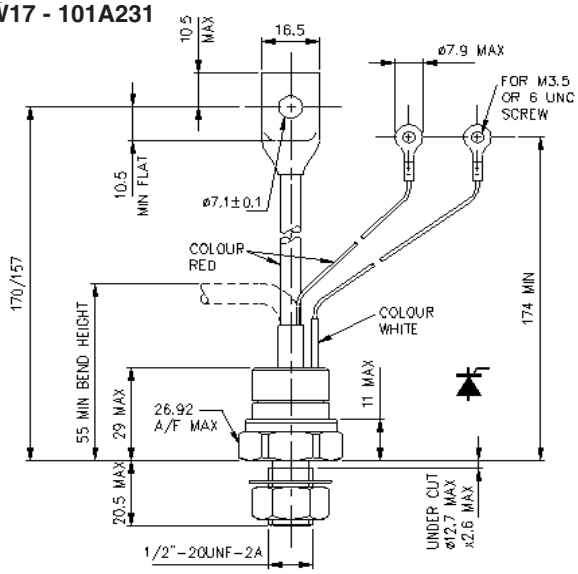

W18 - 101A225

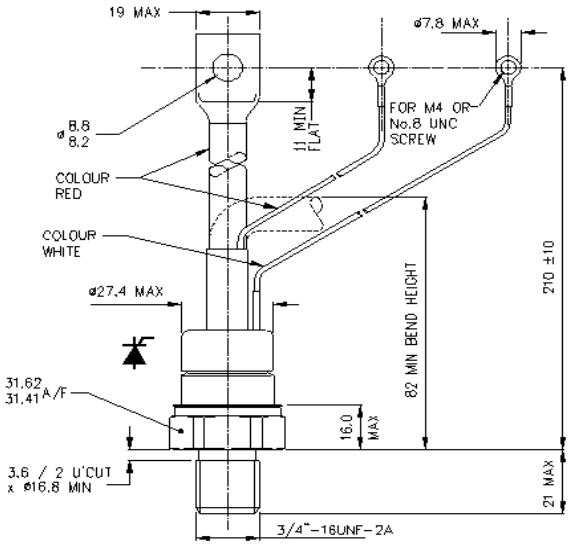

W19 - 101A334

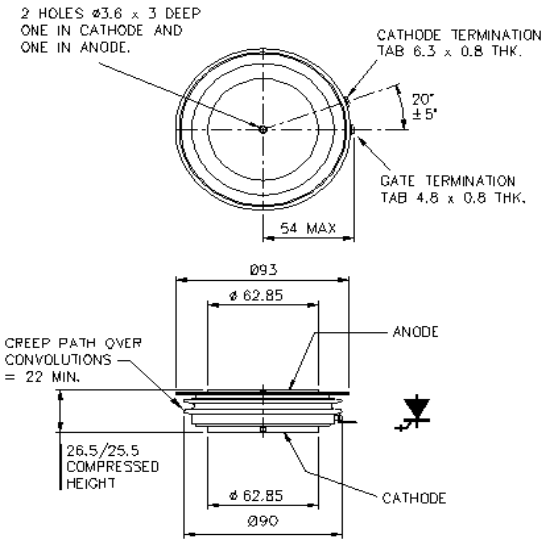

W20 - 100A303

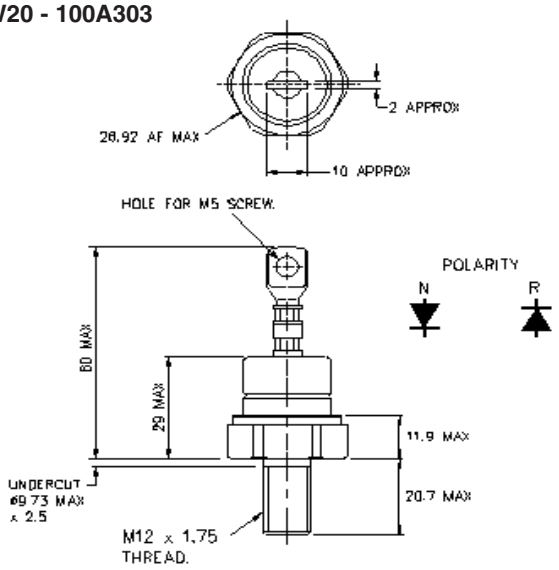

W21 - 100A294

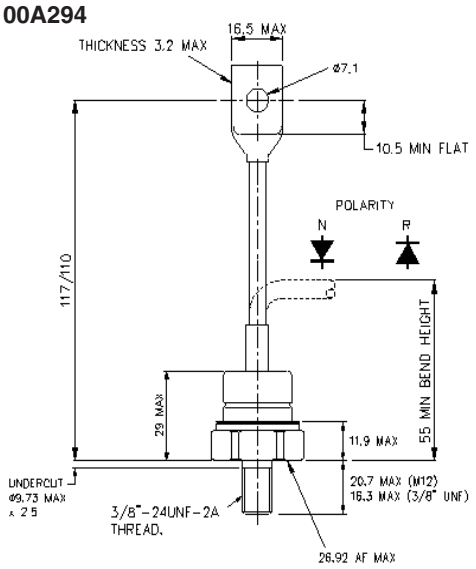

WESTCODE

Dimensions in mm and inches (1 mm = 0.0394")

W22 - 100A297

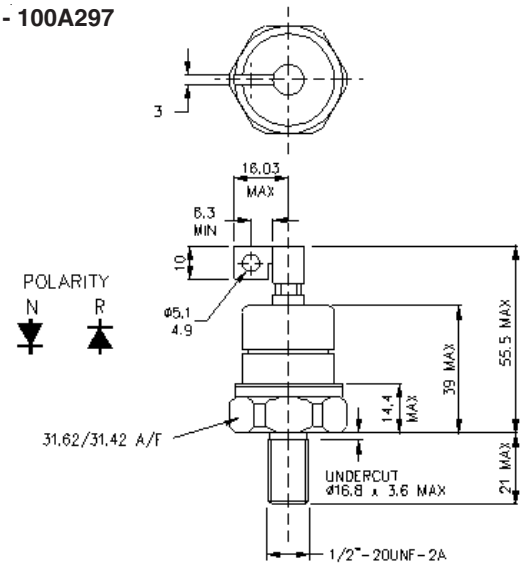

W23 - 100A281

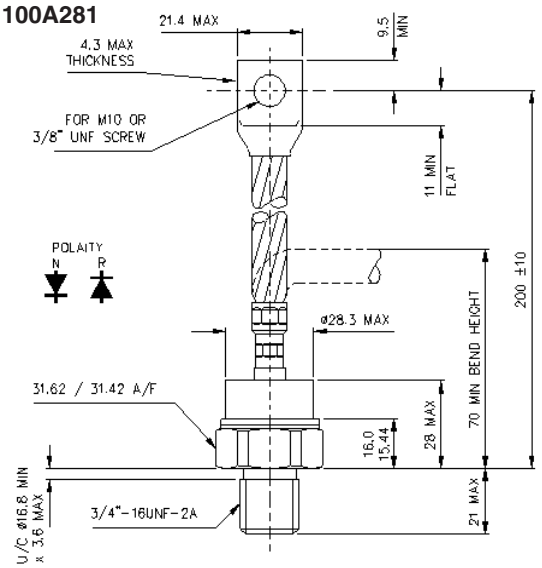

W24 - 100A280

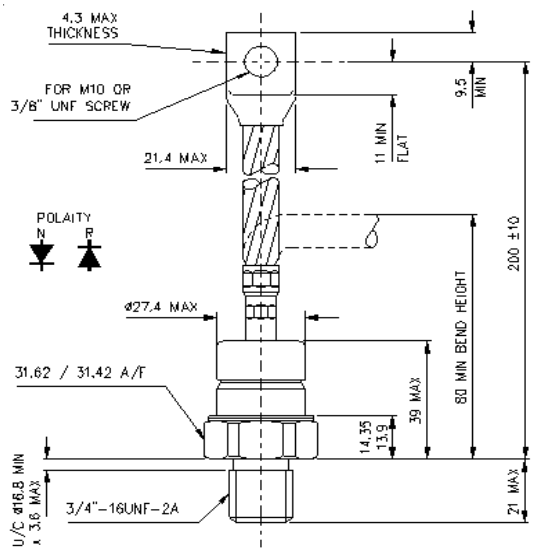

W25 - 101A321

This outline not available at time of going to press - please refer to Westcode Factory

W26 - 100A283

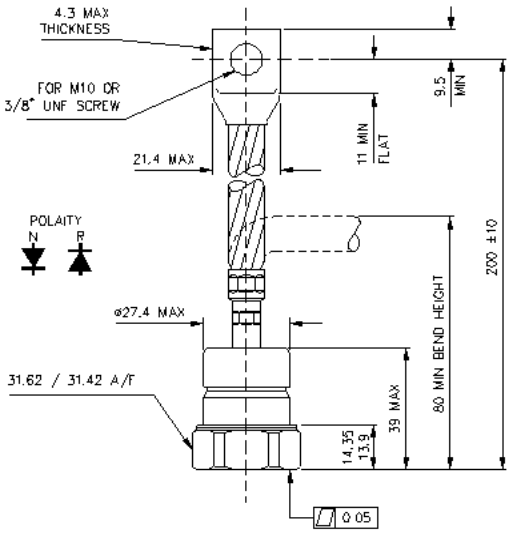

W27 - 100A284

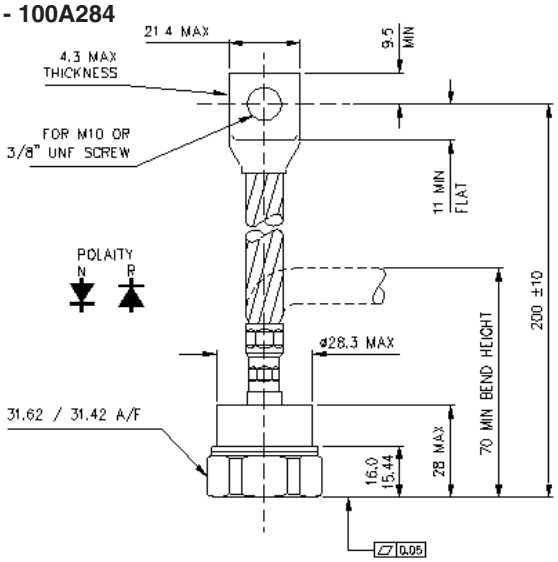

WESTCODE

Dimensions in mm and inches (1 mm = 0.0394")

W28 - 100A330

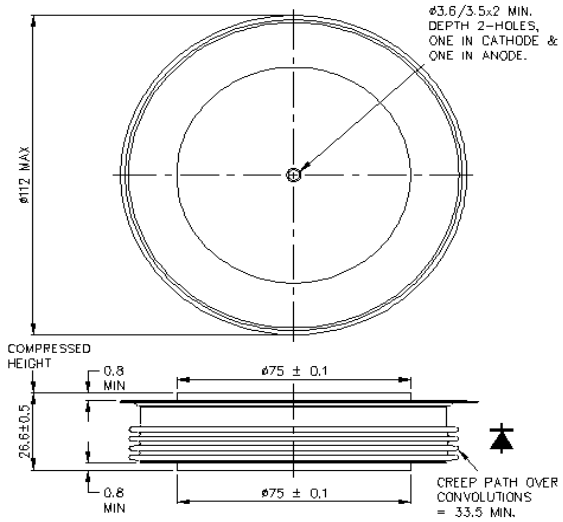

W29 - 100A342

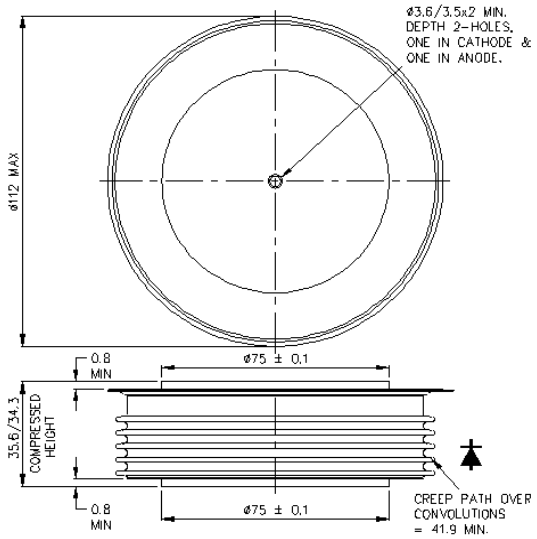

W30 - 101A343

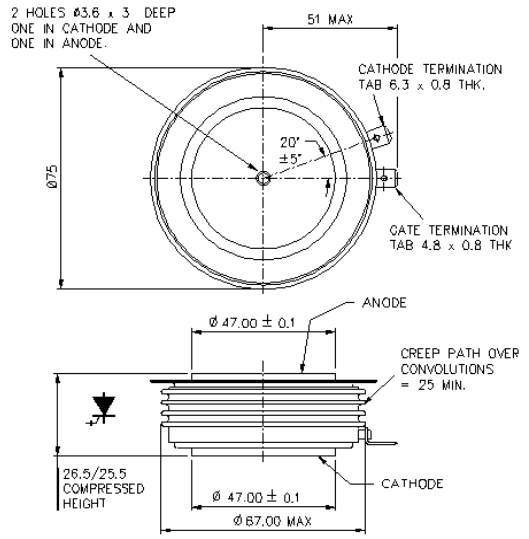

W31 - 101A344

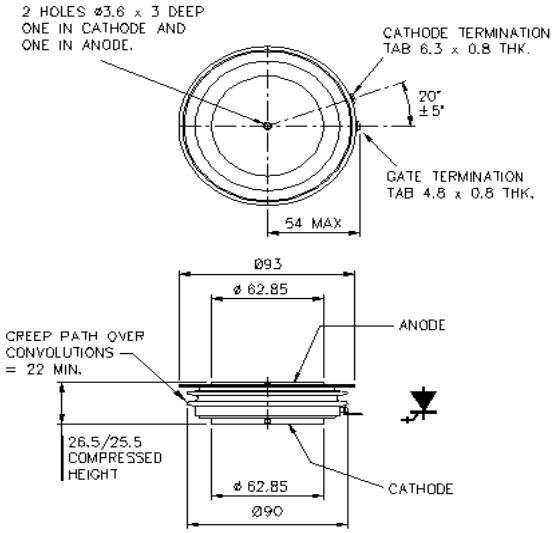

W32 - 101A345

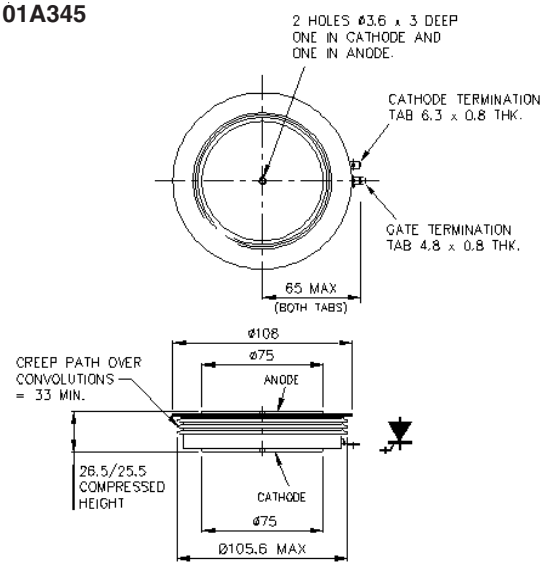

W33 - 101A346

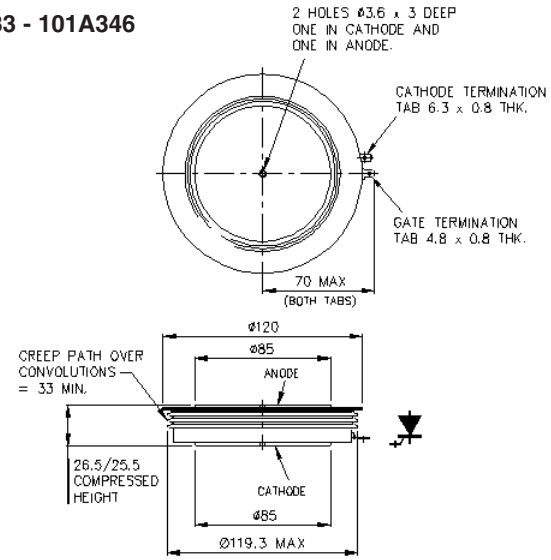

WESTCODE

Dimensions in mm and inches (1 mm = 0.0394")

W34 - 101A287

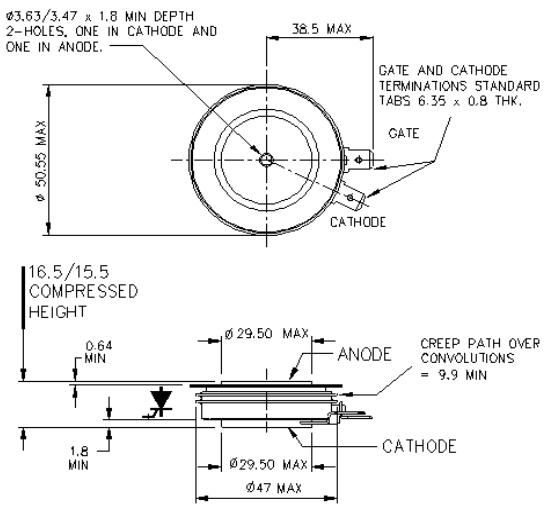

W35 - 101A358

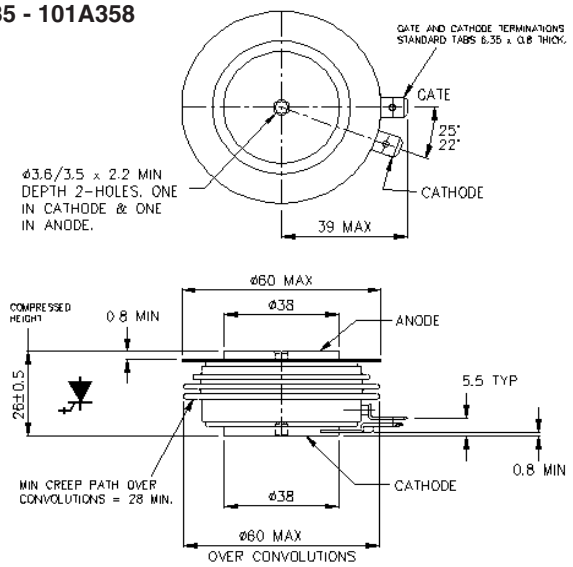

W36 - 101A288

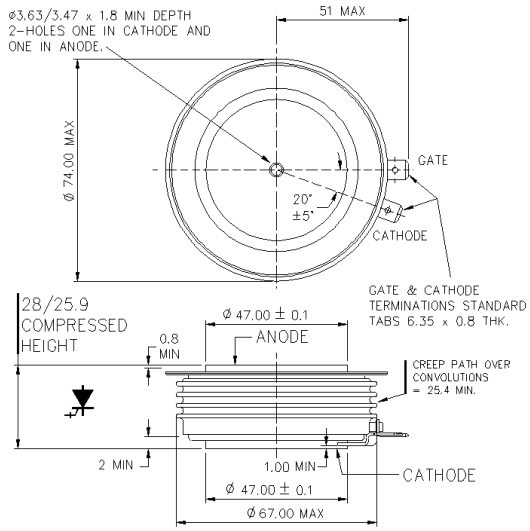

W37 - 101A349

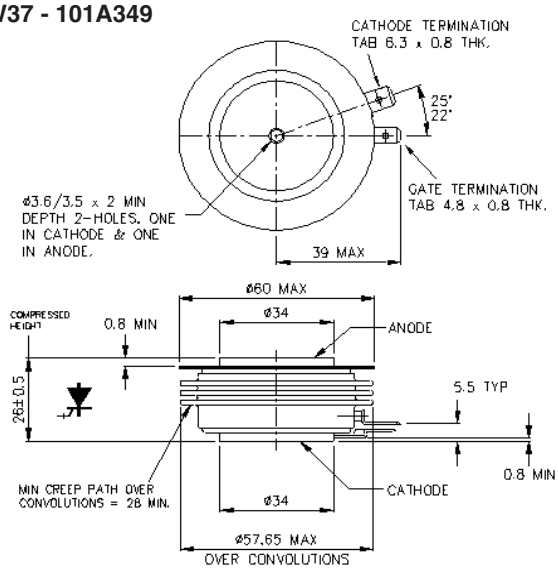

W38 - 101A350

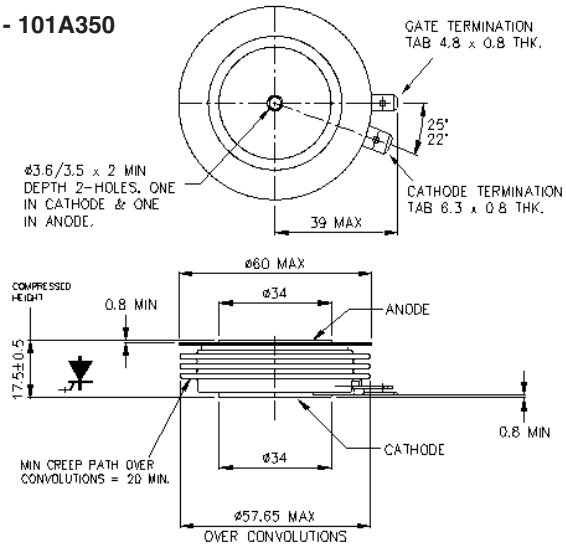

W39 - number not in use.

W40 - 171A107

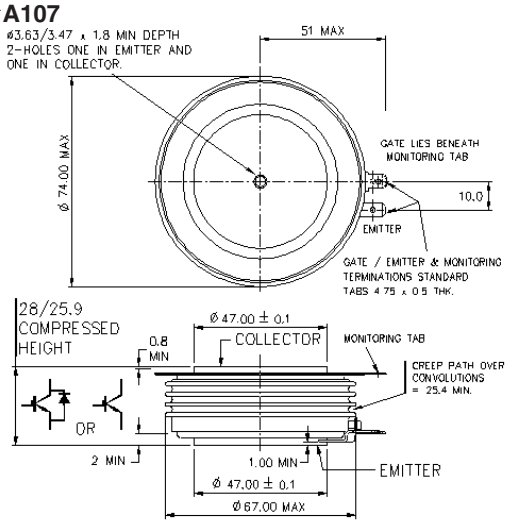

WESTCODE

Dimensions in mm and inches (1 mm = 0.0394")

W41 - 171A108

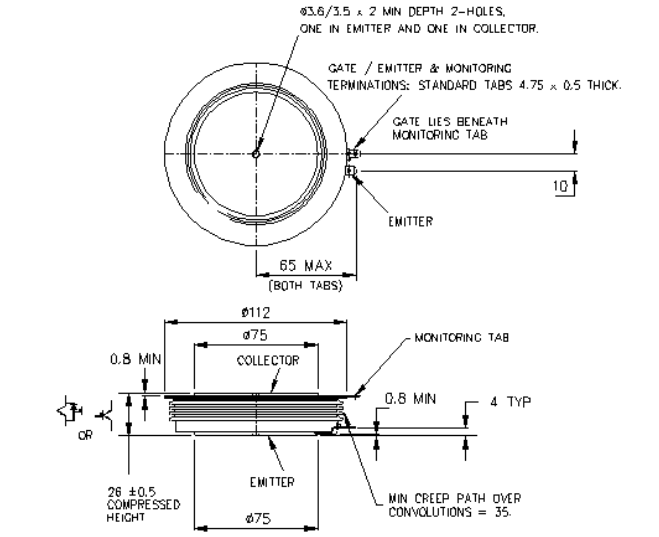

W42 - 100A310

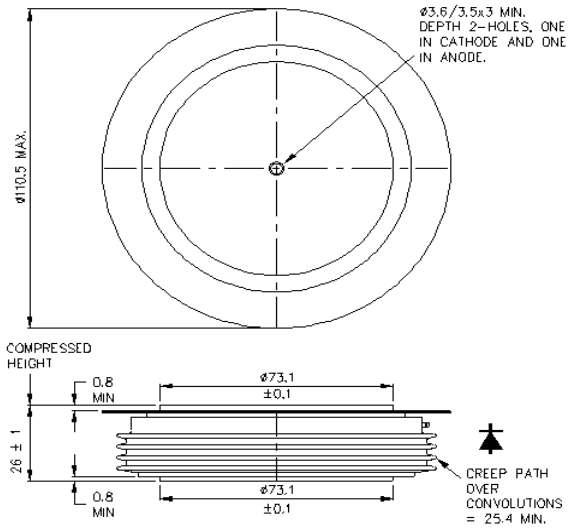

W43 - 100A320

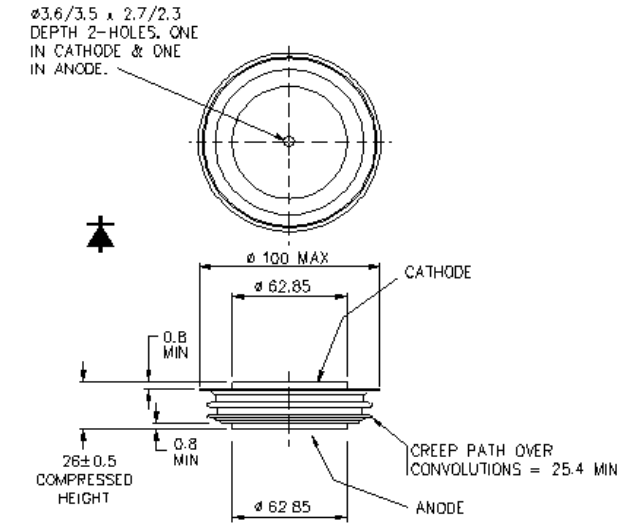

W44 - 101A340

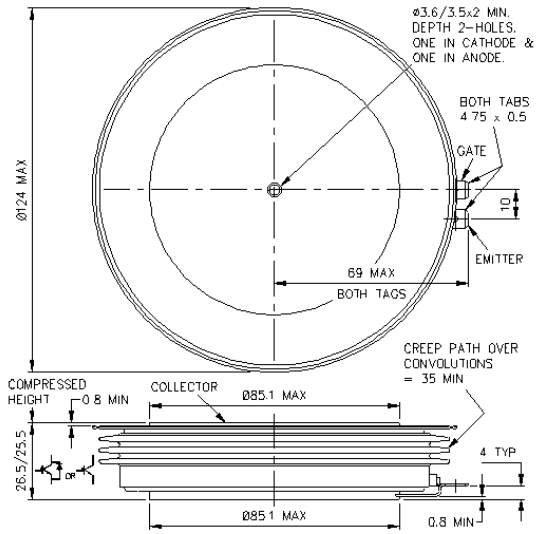

W45 - 101A359

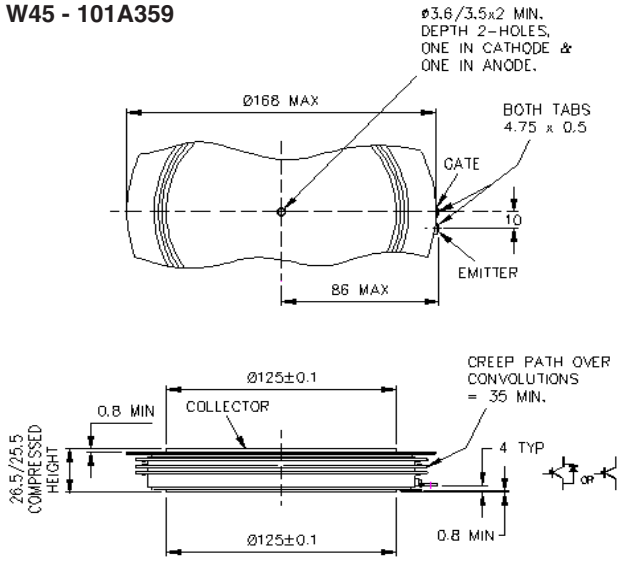

W46 - 101A305

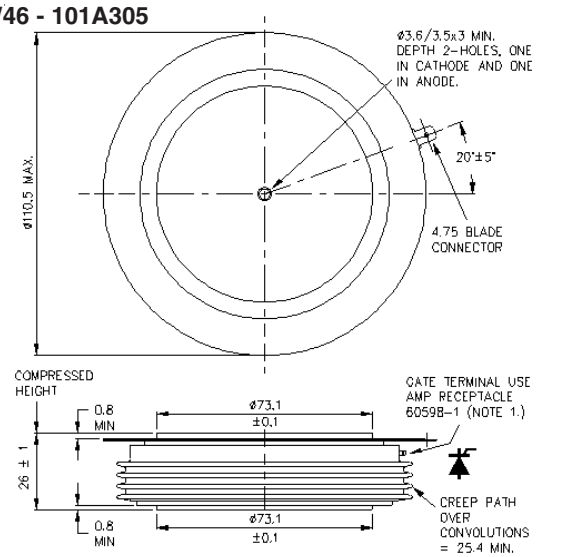

WESTCODE

Dimensions in mm and inches (1 mm = 0.0394")

W47 - number not in use

W48 - 101A347

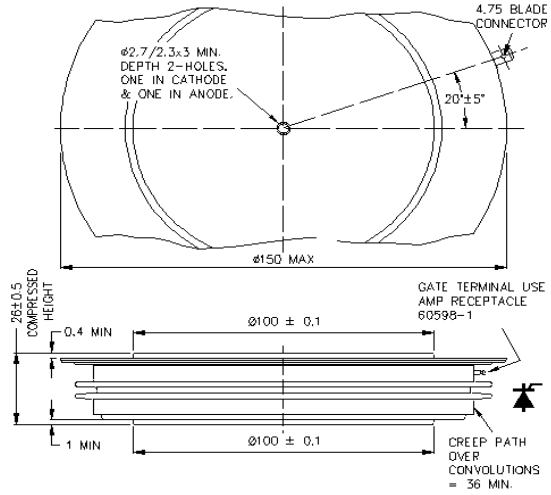

W49 - 150A111

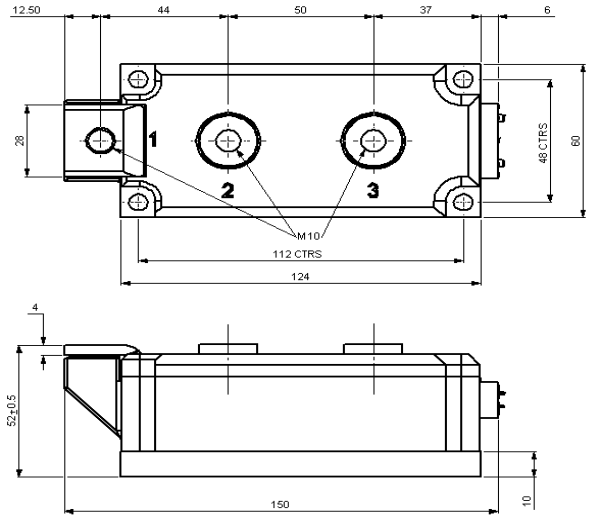

W50 - 101A309

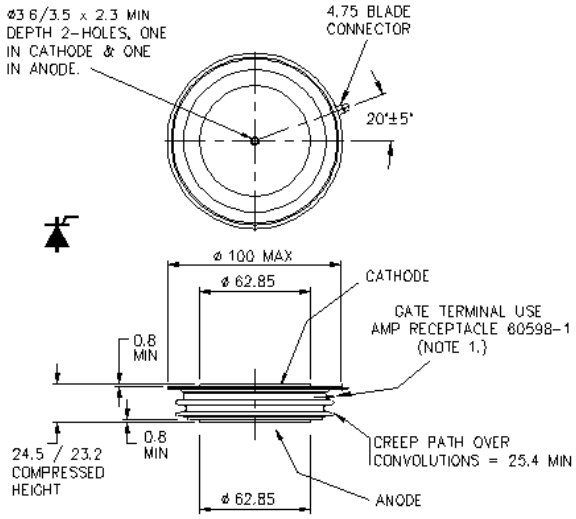

WP1 - 101A361

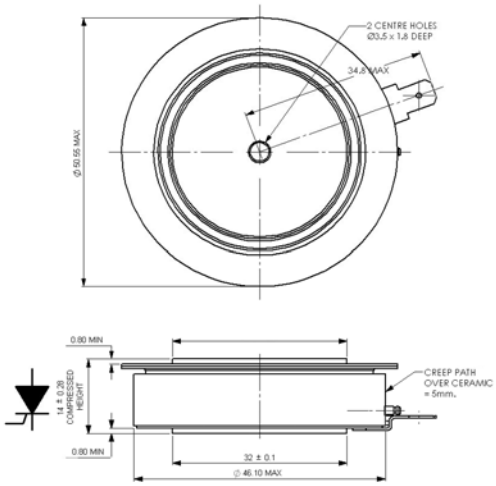

WP2 - 101A354

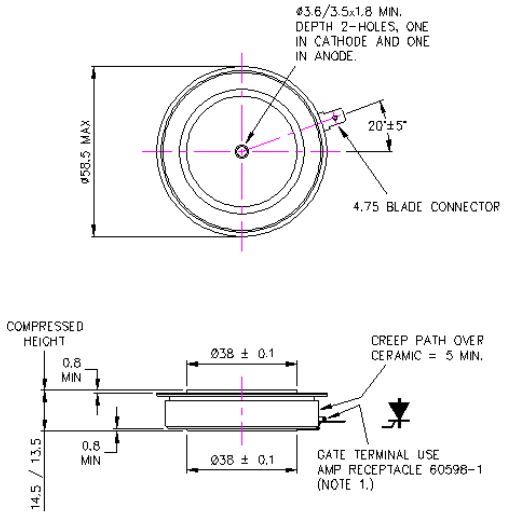

WP3 - 101A353

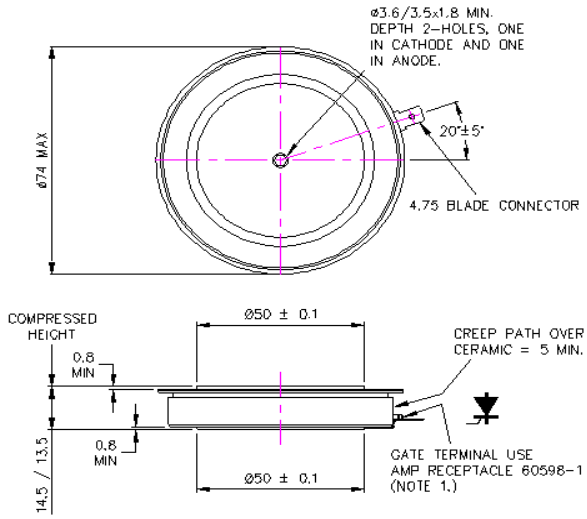

WESTCODE

Dimensions in mm and inches (1 mm = 0.0394")

WP4 - 101A355

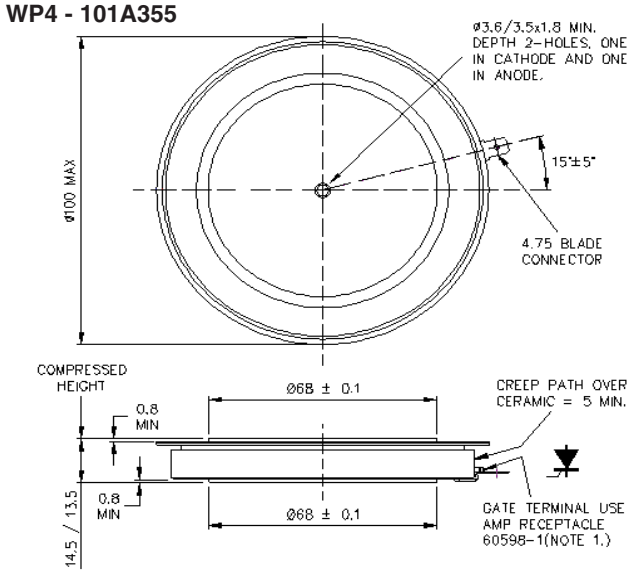

WH1 - G FIN

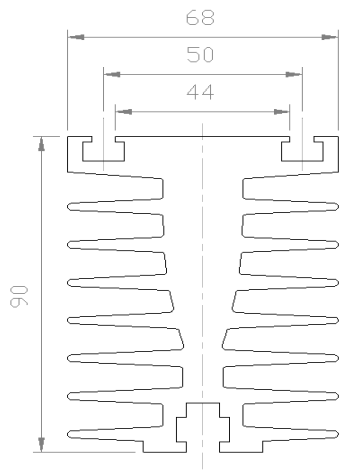

WH2 - GA F

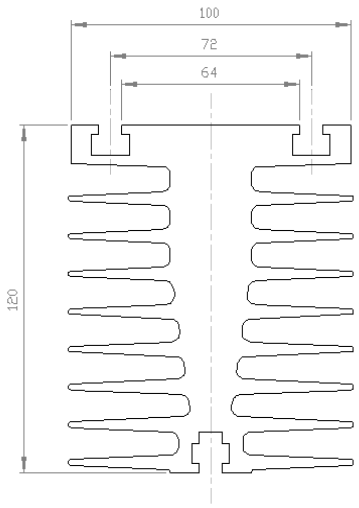

WH3 - H FIN

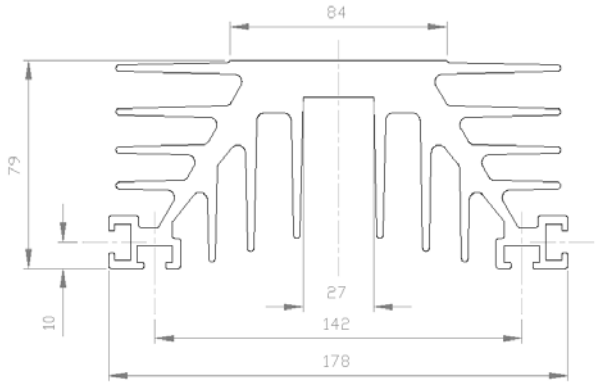

WH4 - T FIN

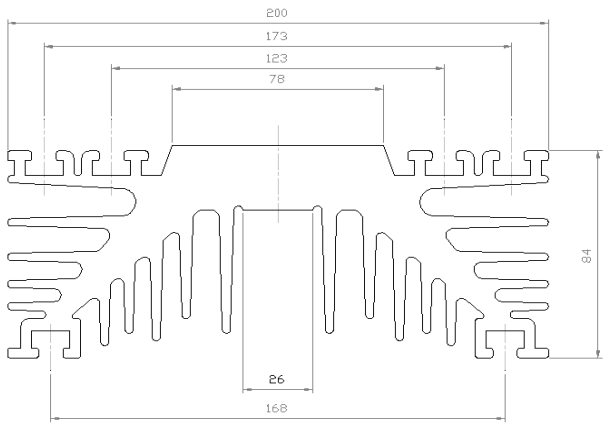

WH5 - TB FIN

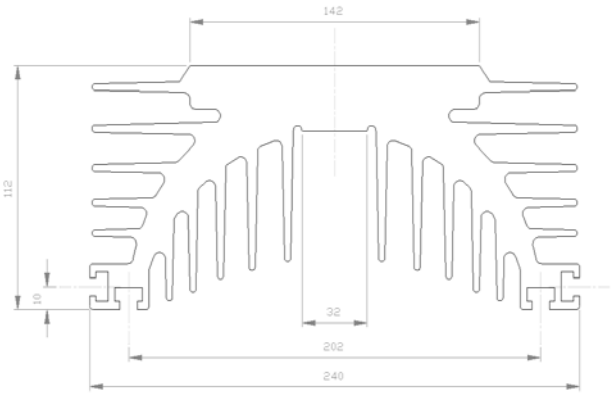

WESTCODE

Dimensions in mm and inches (1 mm = 0.0394")

WH6 - TC FIN

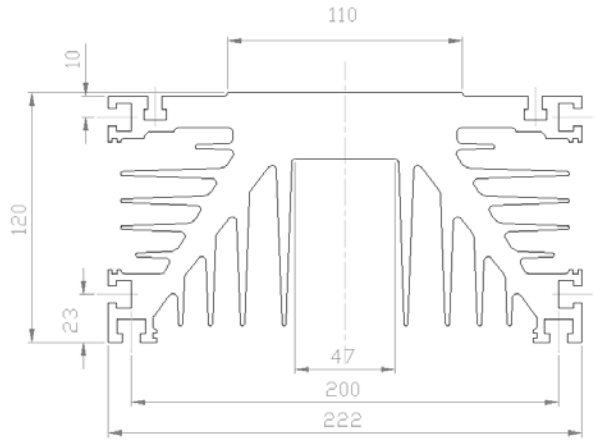

WH7 - LP100 FIN

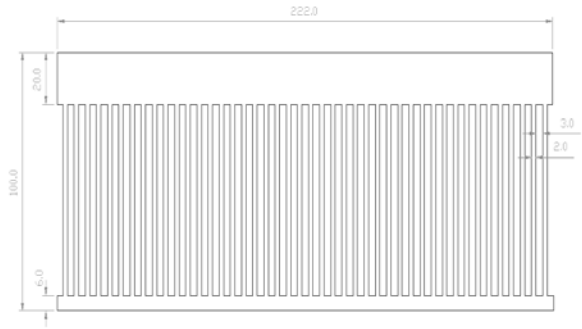

WH8 - WS30 COPPER FIN

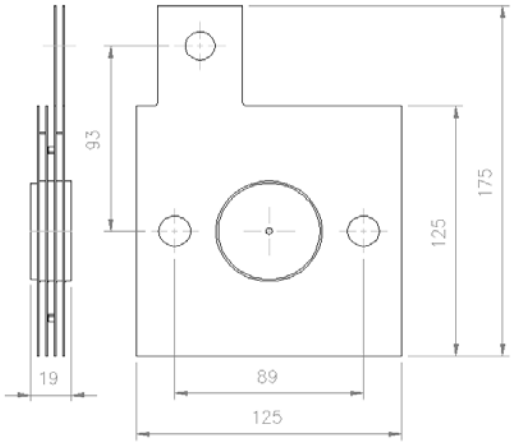

WH9 - WS46 FIN

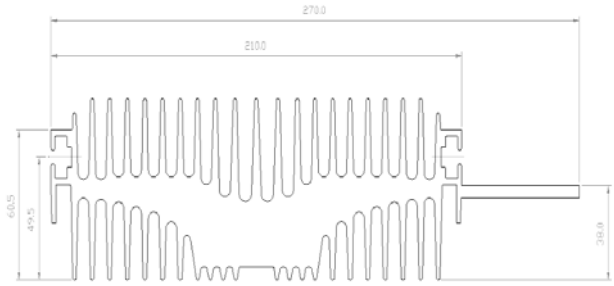

WH10 - LK COOLER

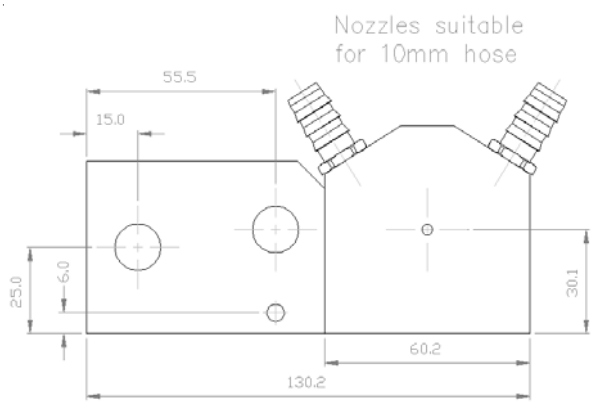

WH11 - LKA COOLER

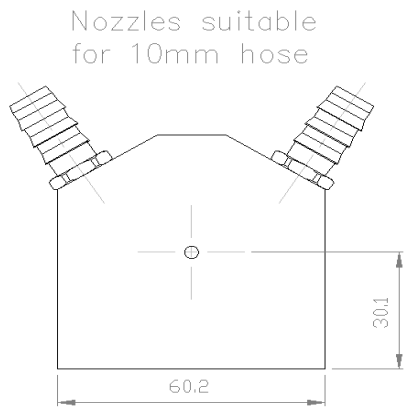

WESTCODE

Dimensions in mm and inches (1 mm = 0.0394")

W12 - LKB COOLER

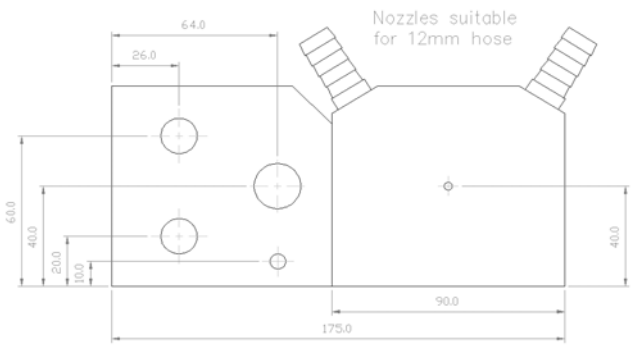

WH13 - LKC COOLER

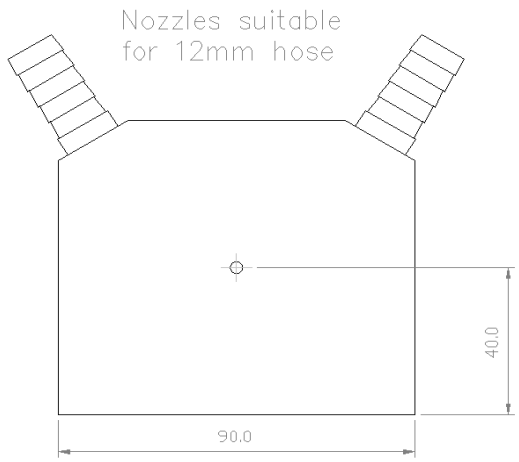

WH14 - WS27 COOLER

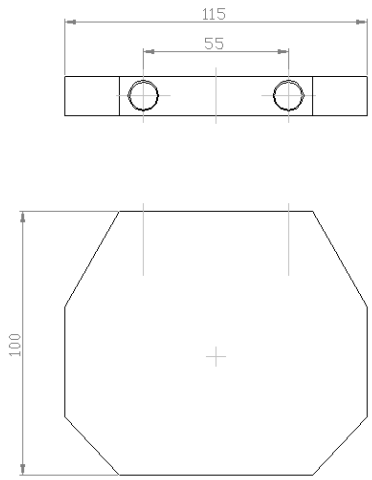

IXYS Sales Representatives
North America & Canada

Country	Authorized for					Company	Phone	Fax	Email
	IXYS	Westcode	Clare	IXYS RF	MwT				
Alabama					•	Holmes & Associates Inc	931-473-7155	931-473-7216	everett@egholmes.com
	•	•	•	•		MEC	256-351-0352	256-351-4081	tom@mec-corp.com
Alaska	•	•	•	•		Advanced Technical Mktg.	425-869-7636	425-869-9841	sales@a-t-m-l-.com
Arizona					•	Odyseey 1	602-284-4407	928-223-0003	billm@odyssey1.biz
	•	•	•	•		MindShare Technical Sales	480-945 7157	480-945 7156	info@mindsharetechnical.com
Arkansas					•	Commtech Sales	972-562-0555	972-542-8335	jerry.mcgraw@commtechsales.com
			•			Norcom, Inc.	972-386-4888	972-386-4907	dallas@norcomtexas.com
California	•	•	•	•		Fusion Technical Sales	408-496-6068	408-588-4017	info@fusiontechnical.com
			•			West Electronic Sales	760-929-1615	760-929-1619	west@westelec.com
	•	•	•	•		SCA	858-792-1101	858-793-9818	slodor@ix.netcom.com
	•	•	•	•		West Electronic Sales	714-465-3720	714-465-3734	west@westelec.com
					•	Steward Technology	408-432-7393	408-432-7358	john@stechrep.com
					•	Wes K	949-421-0124	949-421-0127	wes-k@wes-k.com
Colorado	•	•		•		AKI Enterprises	303-756-0700	303-756-3135	dean@akienterprises.com
			•			Lange Sales	303-795-5462	303-809-8270	dwhite@langesales.com
					•	Odyssey 1	303-773-8176	303-773-8240	billm@odyssey1.biz
Connecticut					•	Matrix Sales	978-459-4000	978-937-5882	matrix@matrixsalesinc.com
	•	•		•		SJ New England	203-723-4707	203-723-1629	info@sjassoc.com
			•			JEBCO	203-265-1318	203-265-1318	csteele@jebco.net
Delaware					•	Engineering Techniques	410-453-0594	410-453-0596	etsinc@erols.com
			•			Nexus Technology	215-942-7868	215-942-0731	kmayer.nexus@verizon.net
	•	•		•		SJ Mid-Atlantic	856-866-1234	856-866-8627	info@sjassoc.com
Florida					•	Holmes & Associates Inc	800-331-8417	813-884-1764	bobduke@egholmes.com
	•	•	•	•		MEC	954-426-8944	954-570-8568	bob@mec-corp.com
Georgia					•	Holmes & Associates Inc	931-473-7155	931-473-7216	everett@egholmes.com
	•	•	•			MEC	770-985-6599		jcorbitt@mec-corp.com
Hawaii	•			•		N. A. Corporate Sales	408-982-0700	408-496-0670	sales@ixys.net
Idaho	•			•		Advanced Technical Mktg.	503-643-8307	503-643-4364	sales@a-t-m-l-.com
					•	Odyssey 1	801-485-4728	801-485-4753	don@odyssey1.biz
Illinois	•	•		•		AEM, Inc.	314-298-9900	314-298-8660	dmoore@aemrep.com
	•	•	•	•	•	Martan, Inc.	847-330-3200	847-330-0024	sales@martininc.com
Indiana	•	•		•		R.O. Whitesell & Assoc.	317-876-9000	317-876-0434	edna_baker@whitesell.com
			•			Rathsburg Associates, Inc.	317-818-7055	317-818 7060	Mail@rathsburg.com
			•			Rathsburg Associates, Inc.	574-642-4585	574-442 4060	Mail@rathsburg.com
Iowa	•	•	•	•	•	AEM, Inc.	913-393-4100	319-377-1539	tmaring@aemrep.com
Kansas	•	•		•		AEM, Inc.	913-393-4100	913-393-4044	mbarnes@aemrep.com
			•			Martan, Inc.	847-330-3200	847-330-0024	sales@martaninc.com
Kentucky	•	•		•		R.O. Whitesell & Assoc.	859-277-4904	859-277-5116	edna_baker@whitesell.com
			•			Rathsburg Associates, Inc.	317-818-7055	317-818-7060	Mail@rathsburg.com
Louisiana					•	Commtech Sales	972-234-1447	972-234-5454	jerry.mcgraw@commtechsales.com
			•			Norcom, Inc.	972-386-4888	972-386-4907	dallas@norcomtexas.com
Maine					•	Matrix Sales	978-459-4000	978-937-5882	matrix@matrixsalesinc.com
	•	•		•		SJ New England	508-485-2700	508-485-2702	info@sjassoc.com
			•			JEBCO	978-251-1300	978-251-3533	csboeingqjebconet.com
Maryland					•	Engineering Techniques	410-453-0594	410-453-0596	etsinc@erols.com
	•	•		•		SJ Chesapeake	703-533-2233	703-533-2236	jland@sjassoc.com
			•			Contact Clare Directly	978-524 6400		sales@clare.com
Massachusetts					•	Matrix Sales	978-459-4000	978-937-5882	matrix@matrixsalesinc.com
	•	•		•		SJ New England	508-485-2700	508-485-2702	info@sjassoc.com
			•			JEBCO	978-251-1300	978-251-3533	csboeingqjebconet.com
Michigan	•	•		•		R.O. Whitesell & Assoc.	248-473-5454	248-473-1165	edna_baker@whitesell.com
			•			Rathsburg Associates, Inc.	616-554-1460	616-554 1462	Mail@rathsburg.com
			•			Rathsburg Associates, Inc.	248-615-4000	248-615-4001	Mail@rathsburg.com

IXYS Sales Representatives
North America & Canada

Country	Authorized for					Company	Phone	Fax	Email
	IXYS	Westcode	Clare	IXYS RF	MwT				
Minnesota					•	Northstar Technology	952-831-6777	952-831-7076	dennis@northstartech.com
	•	•	•	•		Hanna Lind Ltd.	952-931-1242	952-931-3015	hlsales@hannalind.com
Mississippi	•	•	•	•		MEC	256-351-0352	256-351-4081	tom@mec-corp.com
Missouri	•	•		•		AEM, Inc.	314-298-9900	314-298-8660	dmoore@aemrep.com
			•		•	Martan, Inc.	636-939-3300	636-447-1371	sales@martaninc.com
Montana					•	Odyssey 1	801-485-4728	801-485-4753	don@odyssey1.biz
	•			•		AKI Enterprises	303-756-0700	303-756-3135	dean@akienterprises.com
Nebraska	•	•		•		AEM, Inc.	402-328-8311	775-254-5887	tczap@aemrep.com
Nevada					•	Steward Technology	408-432-7393	408-432-7358	john@stechrep.com
					•	Wes K	949-421-0124	949-421-0127	wes-k@wes-k.com
	•			•		Fusion Technical Sales	408-955-9525	408-955-9581	info@fusiontechnical.com
	•	•	•	•		MindShare Technical Sales	480-945 7157	480-945 7156	info@mindsharetechnical.com
New Hampshire					•	Matrix Sales	978-459-4000	978-937-5882	matrix@matrixsalesinc.com
	•	•		•		SJ New England	508-485-2700	508-485-2702	info@sjassoc.com
			•			JEBCO	978-251-1300	978-251-3533	csboeingqjebconet.com
New Jersey			•			Nexus Technology	631-843-0100	631-843-9176	inatalie@nexustec.com
Southern NJ	•			•		SJ Mid-Atlantic	856-866-1234	856-866-8627	info@sjassoc.com
Northern NJ	•	•		•		SJ Associates	856-866-1234	856-866-8627	info@sjassoc.com
Northern NJ					•	Microcom Sales	908-370-6990	908-654-3428	jjackson@microcomsales.com
Southern NJ					•	Scientific Devices	215-256-8641	215-256-8642	john@scidev-phila.com
New Mexico					•	Odyssey 1	602-861-0704	928-223-0003	bill@odyssey1.biz
	•	•	•	•		MindShare Technical Sales	480-945 7157	480-945 7156	info@mindsharetechnical.com
New York					•	Microcom Sales	908-370-6990	908-654-3428	jjackson@microcomsales.com
NY Upstate	•	•	•	•		L-Mar Associates	585-899-3920	585-899-3931	wendy.milleed@l-mar.com
NY Metro			•			Nexus Technology	631-843-0100	631-843-9176	inatalie@nexustec.com
NY Metro	•	•		•		SJ Associates, Inc.	516-536-4242	516-536-9638	info@sjassoc.com
North Carolina					•	Holmes & Associates Inc	919-387-1072	919387-1077	mike@egholmes.com
	•	•	•	•		MEC	919-215-2555	954-570-8568	bob@mec-corp.com
North Dakota					•	Northstar Technology	952-831-6777	952-831-7076	dennis@northstartech.com
	•	•	•	•		Hanna Lind Ltd.	952-931-1242	952-931-3015	hlsales@hannalind.com
Ohio	•	•		•		R.O. Whitesell & Assoc.	216-661-2613	216-661-3192	edna_baker@whitesell.com
			•			Rathsburg Associates, Inc.	440-838-8100	440-128-8397	mark@rathsburg.com
			•			Rathsburg Associates, Inc.	614-777-5915	937-291-1450	mark@rathsburg.com
			•			Rathsburg Associates, Inc.	937-291-4001	937-291-1450	mark@rathsburg.com
Oklahoma					•	Commtech Sales	972-562-0555	972-542-8335	jerry.mcgraw@commtechsales.com
			•			Norcom, Inc.	972-386-4888	972-386-4907	dallas@norcomtexas.com
Oregon	•	•	•	•		Advanced Technical Mktg.	503-643-8307	503-643-4364	sales@a-t-m-l-.com
					•	Lionheart Northwest, Inc.	425-882-2587	425-952-8739	sales@lionheartnw.com
Pennsylvania			•			Nexus Technology	215-942-7868	215-942-0731	kmayer.nexus@verizon.net
					•	Scientific Devices	215-256-8641	215-256-8642	john@scidev-phila.com
	•					Adel	216-661-2613	261-661-3192	
	•	•		•		SJ Mid-Atlantic	856-866-1234	856-866-8627	info@sjassoc.com
			•			Rathsburg Associates, Inc.	724-865-9511	724-865-9811	mark@rathsburg.com
Rhode Island					•	Matrix Sales	978-459-4000	978-937-5882	matrix@matrixsalesinc.com
	•	•		•		SJ New England	508-485-2700	508-485-2702	info@sjassoc.com
			•			JEBCO	978-251-1300	978-251-3533	csboeingqjebconet.com
South Carolina					•	Holmes & Associates Inc	919-387-1072	919-387-1077	mike@egholmes.com
	•	•	•	•		MEC	919-215-2555	313-557-0617	jcorbitt@mec-corp.com
South Dakota	•			•		Hanna Lind Ltd.	952-931-1242	952-931-3015	hlsales@hannalind.com
					•	Northstar Technology	952-831-6777	952-831-7076	dennis@northstartech.com
Tennessee					•	Holmes & Associates Inc	931-473-7155	931-473-7216	everett@egholmes.com
	•	•	•	•		MEC	256-351-0352	256-351-4081	jcorbitt@mec-corp.com

IXYS Sales Representatives
North America & Canada

Country	Authorized for					Company	Phone	Fax	Email
	IXYS	Westcode	Clare	IXYS RF	MwT				
Texas					•	Commtech Sales	972-562-0555	972-542-8335	jerry.mcgraw@commtechsales.com
			•			Norcom, Inc.	972-386-4888	972-386-4907	dallas@norcomtexas.com
					•	Odyssey 1	602-861-0704	928-223-0003	billm@odyssey1.biz
Utah	•	•		•		AKI Enterprises	801-763-0780	801-763-7841	mike@akienterprises.com
					•	Odyssey 1	801-485-4728	801-485-4753	don@odyssey1.biz
Vermont					•	Matrix Sales	978-459-4000	978-937-5882	matrix@matrixsalesinc.com
	•	•		•		SJ New England	508-485-2700	508-485-2702	info@sjassoc.com
			•			JEBCO	978-251-1300	978-251-3533	csboeingqjebconet.com
Virginia					•	Engineering Techniques	410-453-0594	410-453-0596	etsinc@erols.com
	•			•		SJ Chesapeake	703-533-2233	703-533-2236	info@sjassoc.com
			•			Contact Clare Directly	978-524 6400		sales@clare.com
Washington	•	•	•	•		Advanced Technical Mktg.	425-869-7636	425-869-9841	sales@a-t-m-l-.com
					•	Lionheart Northwest, Inc.	425-882-2587	425-952-8739	sales@lionheartnw.com
Washington DC	•			•		SJ Chesapeake	703-533-2233	703-533-2236	info@sjassoc.com
			•			Contact Clare Directly	978-524 6400		sales@clare.com
West Virginia					•	Engineering Techniques	410-453-0594	410-453-0596	etsinc@erols.com
	•	•		•		R.O. Whitesell & Assoc.	614-888-9396	614-888-8792	edna_baker@whitesell.com
Wisconsin	•	•	•	•	•	Martan, Inc.	847-330-3200	847-330-0024	sales@martininc.com
Wyoming	•			•		AKI Enterprises	303-756-0700	303-756-3135	dean@akienterprises.com
					•	Odyssey 1	801-485-4728	801-485-4753	don@odyssey1.biz
Central Canada	•		•	•		CMT-Remark, Inc.	905-612-0900	905-612-0905	emccarrel@cmt-renmark.com
		•				Iconopower	613-744-3670	613-744-8452	mike@iconopower.com
Canada					•	Giga-Tron Assoc. Ltd.	613-747-4114	613-747-3474	greg@gigatron.com
Eastern Canada	•		•	•		CMT-Remark, Inc.	450-510-2003	450-468-6363	rmorin@cmt-renmark.com
	•		•			Advanced Technical Mktg.	450-510-2003		sales@a-t-m-l-.com
		•				Iconopower	613-744-3670	613-744-8452	mike@iconopower.com
Montreal					•	Giga-Tron Associates	514-984-2598	514-620-7812	greg.payne@gigatron.com
Cambridge					•	Giga-Tron Associates	519-220-1856	519-220-1938	greg.payne@gigatron.com
Calgary					•	Giga-Tron Associates	403-257-0636	403-257-0569	karen.white@gigatron.com
Western	•		•	•		CMT-Remark, Inc.	403-225-3033	403-271-2395	mmorton@cmt-renmark.com
Canada		•				Iconopower	613-744-3670	613-744-8452	mike@iconopower.com
	•		•			Advanced Technical Mktg.	905-794-5326		sales@a-t-m-l-.com
	•		•			Advanced Technical Mktg.	613-223-3925		sales@a-t-m-l-.com
	•		•			CMT-Renmark Inc.	613-223-3925		sales@a-t-m-l-.com
	•		•			Advanced Technical Mktg.	604-875-6066		sales@a-t-m-l-.com
	•		•			Advanced Technical Mktg.	604-875-6066		sales@a-t-m-l-.com

IXYS Distributors
North America & Canada

Authorized for					Company	Phone	Web Site
IXYS	Westcode	Clare	IXYS RF	MwT			
•		•			All American	1-800-573-ASAP	www.allamerican.com
		•			Allied	1-800-433-5000	www.alliedelect.com
•					Darrah	216-631-0912	becdarrah@erthlink.net
•		•			Digi-Key	1-800-DIGI-KEY	www.digikey.com
•		•			Future Electronics	1-800-388-3731	www.future.com
•					Hughes Peters	937-235-7100	www.hughespeters.com
		•			Master	1-800-421-8153	www.masterdistributors.com
		•			Newark	1-800-463-9275	www.newark.com
•		•			Nu Horizons	1-888-747-NUHO	www.newhorizons.com
			•		RFMW	408-350-8318	www.rfmw.com

IXYS Sales Representatives and Distributors
Central & South America

Country	Authorized for					Company	Phone	Fax	Email
	IXYS	Westcode	Clare	IXYS RF	MwT				
Puerto Rico	•	•	•			MEC	787-790-5532	787-708-1054	jon@mec-corp.com
Mexico		•				MindShare Technical Sales	480-945 7157	480-945 7156	info@mindsharetechnical.com
Central America			•			Latinrep de Mexico	52-33-3817-3900	33-3817-3010	enzot@latin-rep.com
Brazil		•				Corona Brazil Ind.Com E Repr Ltda	55-19-3935 3257	55-19-3935 3282	semicondutores@coronabrasil.com.br
	•	•	•			Masteronics Rep. Ltda	55-51-3312-6757	55-51-3312-6758	roberto@masteronics.com.br
					•	Vermont Representatives	55 11 37266655	55 11 37222791	altrevizan@vermont-rep.com
South America	•		•			Masteronics Rep. Ltda	55-51-3333-2874	55-51-3312-6758	roberto@masteronics.com.br

IXYS Sales Representatives and Distributors
Japan

Country	Authorized for					Company	Phone	Fax	Email
	IXYS	Westcode	Clare	IXYS RF	MwT				
Japan					•	AMT Incorporated	+81 7 4230 0070	+81 7 4230 0200	sales@ad-mtech.com
	•	•		•		J-Rep Corporation Osaka	+81 6 6368 2111	+81 6 6368 2114	info@j-rep.com
	•	•		•		J-Rep Corporation Tokyo	+81 3 5789 2310	+81 3 3449 7844	tokyo@j-rep.com
	•	•				Nihon West Corporation	+81 4 7340 6701	+81 4 7340 6710	nwest@nihonwest.co.jp
			•			Global Electronic Corp.	+81 3 32601411	+81 3 32607100	arai@gec-tokyo.co.jp
			•			Unidux Inc.	+81 422 324500	+81 422 312050	okada@unidux.co.jp

IXYS Sales Representatives and Distributors
Asia / Pacific / Middle East

Country	Authorized for					Company	Phone	Fax	Email
	IXYS	Westcode	Clare	IXYS RF	MwT				
Australia	•			•		Braemac Pty Limited	+61 2 9550 6600	+61 2 9550 6377	k.ottaway@braemac.com.nz
			•			Eaton IRH Components	+61 2 9693 9333	+61 2 9667 3702	toryrosa@eaton.com
		•				Semikron Pty.	+61 3 85615600	+61 3 95618769	tony.damelio@semikron.com
China	•	•		•		Advantage Power Lld., ShenZhen	+86 755 8294 7272	+86 755 8294 7262	sales@szapl.com
	•	•		•		Advantage Power Ltd., Beijing	+86 10 6296 9270 / 6296	+86 10 6296 0085	sales@szapl.com
	•	•		•		Advantage Power Ltd, Shanghai	+86 21 3414 1365 / 5448	+86 21 6475 0953	sales@szapl.com
				•		ANV Shanghai	+86 21 5890 3528	+86 21 5890 0058	anvsh@online.sh.cn
			•			AsiaCom Techn. Ltd, ShenZhen	+86 755 8287/7333	+86 755 8287/7666	jemmy.lin@asiacom.com.cn
			•			AsiaCom Technology Ltd, WuHan	+86 27 8243 9240	+86 27 8243 9069	zxli@public.wh.hb.cn
		•				Chun Wang Electrical Limited	+86 20 8449 6073 / 6156	+86 20 8440 6960	info@ccsem.com
	•			•		Gangli Electronics	+86 51 9811 7388	+86 51 9810 4942	czgangli@public.cz.js.cn
	•			•		Karin Electronic Supplies Comp. Ltd	+852 2389 8252	+852 2343 6479	stephen.chong@karin.com.hk
	•			•		Revel Electronics Company Ltd	+86 20 8364 9251	+86 20 8364 9086	donaldyang@gzrevel.com
			•			Tektron Electronics Ltd, Shanghai	+86 21 6427 8233	+86 21 6427 0992	allanhuang@tekprc.com
			•			UST Company Limited, Beijing	+86 10 5155 0182 / 0183	+86 10 8208 5272	song@ustcn.com
					•	ACA Technology (auth sales agent)	9094441013	9094440224	norman@acatec.com
					•	Silicon Tech (auth sales agent)	862150595180	862150595190	frank.yang@siliconelec.com
Egypt	•	•	•	•		Ozdisan Elektronik	+90 216 4663683	+90 216 4663686	export@ozdisan.com
Hong Kong	•	•		•		Advantage Power Ltd, Hong Kong	+852 6498 0762	+852 8161 3953	sales@szapl.com
		•				Chun Wang Electrical Comp. Ltd	+852 23312090	+852 2305 2377	info@chunwang.com.hk
	•			•		Karin Electronic Supplies Comp. Ltd	+852 2389 8252	+852 2372 6381	stephen.chong@karin.com.hk
	•			•		Revel Electronics Company Ltd	+852 2389 8891	+852 2389 2448	philipho@revel.com.hk
			•			Tektron Electronics (Hong Kong) Ltd	+852 2388 0629	+852 2780 5871	jasonchan@tek.com.hk
					•	Anv Trading Co	6622611688	6622611689	anvtrading@pacific.net.th
India			•			BBS Electronics Internat. Pvt. Ltd	+91 80 2530 6611	+91 80 2530 6610	vishvajit@bbsgroup.net
		•				Electric Controls Company	+91 22 2208 1223/5369	+91 22 2208 5177	sales@ecc.co.in
				•	•	Indosale Pvt Limited	+91 80 2364 0503	+91 80 2364 1170	elcam@vsnl.com
	•					Pankaj Electronics	+91 11 2627 1049	+91 11 2627 3494	info@pankaj.biz
Indonesia		•				PT Ometraco Arya Samanta	+62 21 619 6166	+62 21 619 3447	sales-eld@aos.co.id
	•			•		Bluetree Electronics Ltd	+65 6 3482247	+65 6 64555922	rfq@bluetree.com.sg
Israel		•				Bruno International Corporation	+972 3 570 5323	+972 3 570 5331	brn@brunocorp.co.il
	•		•	•		Future Electronics	+972 9 970 1414	+972 9 958 4333	alon.balash@futureelectronics.com
				•	•	MTI Engineering Limited	+972 39008900	+972 3 9008901	adi_p@mti-group.co.il
	•		•	•		Avnet	+972 9 778 0280	+972 3 760 1115	avnet.israel@avnet.com
Korea - South				•	•	AnyEparts	+82 31 713 4216	+82 31 713 8160	skkang@anyeparts.com
	•	•		•		Daan Electronics Co. Limited	+82 2 718 8033	+82 2 718 1161	skyim@daan.co.kr
	•	•		•		Daan Electronics Co. Ltd (Seoul)	+82 26 679 3614	+82 2 718 1161	oypark@daan.co.kr
	•	•		•		Daan Electronics Co. Ltd (Seoul)	+82 22 279 3614	+82 22 279 6496	syjeon@daan.co.kr
	•	•		•		Daan Electr. Co. Ltd (Daegu City)	+82 53 423 0192	+82 53 604 2650	eslee@daan.co.kr
	•	•		•		Daan Electr. Co. Ltd (Pusan City)	+82 51 802 9076	+82 51 802 5306	eslee@daan.co.kr
	•		•			GenCore (Seoul)	+82 23 463 0040	+82 23 463 4935	marketing@gencore.co.kr
	•		•			GenCore (Gumi)	+82 54 4571062	+82 54 457 1063	justinpark@gencore.co.kr
		•				Mainsail Mercantile Limited	+82 2 745 2761	+82 2 745 2766	mainsail@korea.com
			•			Mitech Corp.	+82 2 868 0551-2	+82 2 868 0557	mitechbk@chollian.net
			•			Wonil Digital technology Corp.	+82 31 420 5871-3	+82 31 420 5870	jkkim@wonildigital.com
					•	Electro-comm	323-254-7790	323-254-8066	dsong@anyeparts.com
Malaysia			•			Enzer Electronics Sdn, Bhd, K.L.	+60 3 795 54813	+60 3 795 84313	christineml_lai@enzer.com.my
			•			Enzer Electronics Sdn.Bhd, Peneng	+60 4 656 1288	+60 4 656 0288	cl_chee@enzer.com.my
		•		•		Shanhong Electric Pte Limited	+65 6745 8343	+65 6745 8783	ycong@shanhong.com
	•					Bluetree Electronics Ltd	+65 6 3482247	+65 6 64555922	rfq@bluetree.com.sg
New Zealand	•					Braemac Pty Limited	+64 9 486 5200	+64 9 486 460	k.ottaway@braemac.com.nz
			•			Eaton Electric	+61 2 9693 9333	+61 2 9667 3702	toryrosa@Eaton.com
		•				Semikron Pty. Limited	+64 9 414 2970	+64 9 414 2971	aaron.murray@semikron.com

IXYS Sales Representatives and Distributors
Asia / Pacific / Middle East

Country	Authorized for					Company	Phone	Fax	Email
	IXYS	Westcode	Clare	IXYS RF	MwT				
Singapore				•	•	ANV Trading Company Limited	+66 2 2611688	+66 2 2611689	anvtrading@pacific.net.th
			•			Enzer Electronics Pte. Limited	+65 6 553 0988	+65 6 553 0218	kenny_low@enzer.com.sg
		•				Shanhong Electric Pte Limited	+65 6745 8343	+65 6745 8783	ycong@shanhong.com
	•			•		Bluetree Electronics Ltd	+65 6 3482247	+65 6 64555922	rfq@bluetree.com.sg
South East Asia					•	Anv Trading Co	6622611688	6622611689	anvtrading@pacific.net.th
Taiwan			•			Frontek Technology Corp.	+886 2 8912 1688	+886 2 8912 1396	andy_liu@frontek.com.tw
			•			Neolec International Inc.	+886 2 8751 5852	+886 2 8751 3584	fyih@neolec.com.tw
	•			•		Industrade Company Limited	+886 2 2809 1251	+886 2 2808 4990	info@industrade.com.tw
	•	•	•	•	•	IXYS Taiwan Office	+886 2 2523 6368	+886 2 2523 6369	Sales@ixys.com.tw
			•		•	Seraphim Engineering Company Ltd	+886 2 2698 4660	+886 2 2698 4536	takuyalin@seraphim.com.tw
		•				Sinchtec Company Limited	+886 2 2738 3600	+886 2 2735 1646	sinchtec@ms39.hinet.net
Thailand					•	ANV Trading Company Limited	+662 261 1688	+662 261 1689	anvtrading@pacific.net.th
		•				APT Group Company Limited	+662 757 8222-5	+662 394 1880	apthouse@hotmail.com
			•			Enzer Electr. (Thailand) Comp. Ltd	+662 576 1518	+662 576 1517	jeerapon@enzer.co.th
	•			•		Bluetree Electronics Ltd	+65 6 3482247	+65 6 64555922	rfq@bluetree.com.sg
Middle East	•	•	•	•	•	IXYS Semiconductor GmbH	-	+44 1249 659448	sales.middleeast@ixys.co.uk

IXYS Sales Representatives and Distributors
Rest of World

Country	Authorized for					Company	Phone	Fax	Email
	IXYS	Westcode	Clare	IXYS RF	MwT				
Belarus			•			RSP	+7 095 787 6353	+7 095 787 6353	katlerov@rssp.ru
Russia	•	•	•	•	•	Argussoft Electronic Components	+7 495 221 0130	+7 495 221 0137	ixys@argussoft.ru
			•			MT-Systems Limited	+7 812 325 3685	+7 812 786 8579	micro@mtgroup.ru
Ukraine	•	•	•	•	•	SEA Company	+380 44 575 94 00	+380 44 575 9410	aleksandra@sea.com.ua
South Africa			•			Arrow Altech	+27 11 923 9600	+27 11 923 9887	info@arrow.altech.co.za
	•		•			Avnet Kopp (Pty) Limited	+27 11 809 6100	+27 11 809 6276	sales@avnet.co.za
				•	•	Ecs (Pty) Limited	+27 11 805 4272	+27 11 805 2119	info@ecssa.co.za
	•	•				Advanced Product Techn. (Pty) Ltd	+27 11 792 6583	+27 11 8052119	tony@ecssa.co.za

IXYS Sales Representatives and Distributors
Germany

Country	Authorized for					Company	Phone	Fax	Email
	IXYS	Westcode	Clare	IXYS RF	MwT				
Germany Sales Representatives									
South East (D)	•	•	•	•	•	Industrievertretung Reiner Neuf	+49 9356 972020	+49 9356 972121	r.neuf@t-online.de
South West (D)	•	•	•	•	•	Hauber & Graf Electronics	+49 7144 281503	+49 7144 281505	electronics@hauber-graf.de
North West (D)	•	•	•	•	•	Industrievertretung Kraus	+49 2088 833992	+49 2088 833993	p.w.kraus@t-online.de
East (D)	•	•	•	•	•	Power Components	+49 3988 8520015	+49 3988 843071	thomas.kindervater@t-online.de
Central (D)	•	•	•	•	•	Handelsvertretung ELREP	+49 7191 733305	+49 7191 733304	sales@elrep.de
Spare Parts Service	•			•		IXYS Semiconductor GmbH	+49 6206 503483	+49 6206 503274	w.jaeger@ixys.de
Distributors									
Germany			•			Dacom Sued GmbH	+49 8996 4880	+49 8996 5165	email@dacomsued.de
	•					Dietrich Schuricht GmbH & Co. KG	+49 1805 2234 35	+491805 2234 36	scc@schuricht.de
	•		•	•		Future Electronics	+49 8995 7270	+49 8995 78838	anita.meisner@futureelectronics.com
	•					Hubert Schroeter	+49 4060 0006-0	+49 4060 0006-30	info@schroeter-kg.de
	•	•	•	•		MJC Elektrotechnik GmbH	+49 6206 15575-0	+49 6206 15670-50	info@mjc-elektrotechnik.de
	•			•	•	MSC Vertriebs GmbH	+49 7249 910115	+49 7249 910215	wg@msc-ge.com

Europe

Country	Authorized for					Company	Phone	Fax	Email
	IXYS	Westcode	Clare	IXYS RF	MwT				
Austria	•		•	•		ABB Komponenten Div. Industrie	+43 160109 6183	+43 160109 8600	kurt.lechner@at.abb.com
	•		•	•		Future Electronics	+43 2233 55366-0	+43 2233 55360	info-at-future@futureelectronics.com
	•	•	•	•		IGI Handels GmbH	+43 1699 1636	+43 1699 1638	office@igi.at
	•			•		MSC Vertriebs GmbH	+49 7249 910115	+49 7249 910215	wg@msc-ge.com
					•	MRC Components	+49 816198480	+49 8161984820	info@mrccomponents.de
Belgium			•			ACAL	+32 2 720 59 83	+32 2 725 10 14	jp.cnop@acal.be
	•		•	•		Future Electronics	+32 9340 5270	+32 9340 5270	gino.matthys@futureelectronics.com
	•	•				Promethe Electronics SPRL	+32 71 51 52 80	+32 71 51 99 01	
Bulgaria	•		•	•		Future Electronics	+359 2 9745952	+359 2 9745968	antoaneta.petkova@futureelectronics.com
	•	•	•	•		MJC Elektrotechnik GmbH	+49 6206 15575-0	+49 6206 15670-50	info@mjc-elektrotechnik.de
Czech Rep & Slovakia			•			Enika CZ	+420 49 377 3365	+420 49 377 3322	p.samal@enika.cz
	•		•	•		Future Electronics	+420 72 499 8532	+420 26 121 8842	Pavel.rasejev@futureelectronics.com
	•	•				Starmans Electronics, s.r.o	+420 28 384 2063	+420 28 384 1067	ikolatek@starmans.cz
Denmark	•		•	•		Future Electronics	+45 764 08764	+ 45 764 08765	karl-peter.andersen@futureelectronics.com
	•	•	•	•	•	Trafomo A/S	+45 446 86100	+45 446 86200	trafomo@trafomo.dk
Estonia	•		•	•		Future Electronics Estonia	+372 614 3601	+372 614 3603	janika.metsallik@futureelectronics.com
	•	•		•		Teamtron OY	+358 9 857 1770	+358 9 851 77600	info@teamtron.fi
					•	Avelek Oy	+358 9346 3415	+358 9346 3540	timov.avelek@dlc.fi
			•			Flinkenberg	+358 9 859911	+358 9 85991306	customer.service@flinkenberg.fi
	•	•	•	•		CARO Electronics Ltd	+371 75 01005	+371 75 01004	info@caro.lv
Finland			•			Flinkenberg	+358 9 859911	+358 9 85991306	customer.service@flinkenberg.fi
					•	Avelek Oy	+358 93463415	+358 93463540	timov.avelek@dlc.fi
	•		•	•		Future Electronics Finland	+358 9 525 9950	+358 9 455 1050	eero.marttila@futureelectronics.com
	•	•		•		Teamtron OY	+358 9 857 1770	+358 9 851 77600	info@teamtron.fi
Former Yugoslavia/ Croatia/Slovenia/ Bosnia/Serbia	•	•	•	•	•	Piletic	+385 1 3638 318	+385 1 3639 399	piletic@zg.t-com.hr

IXYS Sales Representatives and Distributors
Europe

Country	Authorized for					Company	Phone	Fax	Email
	IXYS	Westcode	Clare	IXYS RF	MwT				
Europe (cont.)									
France	•	•		•		Arcel	+33 4 78 35 02 21	+33 4 78 35 69 54	diederichs@arcel.fr
					•	Elexience	+33 1 69538000	+33 1 60 11 98 09	info@elexience.fr
	•	•	•	•		Eurocomposant S.A.	+33 1 30 64 95 15	+33 1 30 43 68 27	vmadeline@eurocomposant.fr
	•		•	•		Future Electronics	+33 1 69 82 11 11	+33 1 69 82 11 02	patricia.avsec@futureelectronics.com
Greece	•					Markides Michelis & Company	+30 210 5980145	+30 210 5909833	sales@markidi.gr
	•	•	•	•	•	Micronics	+30 210 9962948	+30 210 9951814	info@micronics.gr
Hungary	•		•	•		Future Electronics	+36 1 224 0510	+36 1 224 0511	agnes.morocz@futureelectronics.com
	•	•	•	•		MJC Elektrotechnik GmbH	+49 6206 15575-0	+49 6206 15670-50	info@mjc-elektrotechnik.de
Ireland					•	Anglia Microwave	+44 1245 227919	+44 1245 227084	sales@anglia-micro.co.uk
	•		•	•		Future Electronics	+353 162 64098	+353 162 63538	steve.burns@futureelectronics.com
	•	•	•	•		Solid State Supplies PLC	+353 673 4455	+353 673 4329	myron.robinson@sssplc.ie
Italy					•	CELTE S.R.L.	+39 029 108020	+39 029 210 8088	d.carraro@celte-srl.com
			•			Claitron Div. Of Silverstar	+39 026 614 91	+39 026 610 5666	Mguri@arrowitaly.com
	•			•		Enrico Falloni s.r.l.	+39 024 671 2230	+39 0248013233	info@enricofalloni.it
	•			•		FCE	+39 024 892 2329	+39 024 892 2341	giovanni.morelli@FCEdirect.com
	•		•	•		Future Electronics	+39 026 609 41	+39 026 601 2843	daniela.zanuso@futureelectronics.com
	•	•		•		Italwest s.r.l.	+39 011 403 3864	+39 011 403 3857	info@italwest.it
Latvia	•	•	•	•		CARO Electronics Ltd	+371 75 01005	+371 75 01004	info@caro.lv
Lithuania	•		•	•		Future Electronics Estonia	+370 37 408482	+370 37 373357	donatas.trapenskas@futureelectronics.com
	•	•	•	•		CARO Electronics Ltd	+371 75 01005	+371 75 01004	info@caro.lv
Netherlands			•			ACAL, Netherlands	+31 4 0 2502602	+31 40 2510255	acal@acal.nl
	•		•	•		Future Electronics	+31 76 5444 888	+31 76 5444 880	anne.baeten@future.electronics.com
	•	•		•		KWx	+31 186 633602	+31 186 633605	halfgeleiders@kwx.nl
Norway	•	•		•		Future Electronics	+47 2290 5800	+47 2290 5790	erik.dragset@futureelectronics.com
	•	•				Trafomo AB	+45 44 68 61 00	+45 44 68 62 00	Trafomo@trafomo.dk
Poland/Moldavia	•	•	•	•		MJC Elektrotechnik GmbH	+49 6206 15575-0	+49 6206 15670-50	info@mjc-elektrotechnik.de
Romania			•			Comat ELTH SRL	+40 21 444 1241	+40 21 444 1241	syscom02@as.ro
	•	•	•	•		MJC Elektrotechnik GmbH	+49 6206 15575-0	+49 6206 15670-50	info@mjc-elektrotechnik.de
Spain/ Portugal					•	ALTAIX ELECTRONICA	+34 91 4400385	+34 91 4400386	javaquero@altaix.com
	•	•		•		Future Electronics	+34 91 721 4270	+34 91 721 1043	anton.arriaga@futureelectronics.com
			•			NEXO Electronica SL	+34 91 375 66 80	+34 91 754 4375	cial@nexosl.com
	•	•		•		Rectificadores Guasch S.A.	+34 93 309 8891	+34 93 300 1841	guasch@e-guasch.com
Sweden			•		•	Comptronic AB	+46 856 470 670	+46 856 470 671	mailbox@comptronic.se
	•	•		•		Future Electronics	+46 862 488 00	+46 862 488 90	jan.brandt@futureelectronics.com
	•	•		•		Trafomo AB	+46 363 895 70	+46 363 895 79	trafomo@trafomo.se
Switzerland			•			Novitronic AG	+41 44 306 91 91	+41 44 306 91 81	info@novotronic.ch
	•	•	•	•	•	Powerparts AG	+41 62 896 70 80	+41 62 896 70 88	info@powerparts.ch
Turkey	•		•	•		Future Electronics	+90 216 571 9700	+90 216 445 8704	bilal.murteza@futureelectronics.com
	•	•	•	•	•	Özdisan Elektronik	+90 216 466 3683	+90 216 466 3686	bilgi@ozdisan.com
United Kingdom				•	•	Anglia Microwave	+44 1245227919	+44 1245227084	sales@anglia-micro.co.uk
	•	•				Europower Components Limited	+44 1427 668888	+44 1427 668866	sales@europowercomponents.com
	•		•	•		Future Electronics	+44 1753 763000	+44 1753 689100	info-eur-future@futureelectronics.com
	•	•				H-Rep Limited	+44 1249 467403	+44 1249 445306	andy.hurkett@ixys.co.uk
	•	•				GD Rectifiers Limited	+44 1444 243452	+44 1444 870722	enquiries@gdrectifiers.co.uk
	•	•				Harmsworth Townley & Comp. Ltd	+44 1706 814931	+44 1706 812382	sales@townleyltd.co.uk
	•	•	•	•		Solid State Supplies PLC	+44 1892 836836	+44 1892 837837	sales@sssplc.com
		•	•			Techrep UK	+44 1823 352572	+44 1823 352797	info@tech-rep.co.uk

г.Мінс к тел ./ф 8(017)2005646 email: minsk17@tut.by www.fotorele.net www.igbt.by

НЕ работаем с физическими (частными) лицами